ORNL-TM-729

# MSRE DESIGN AND OPERATIONS REPORT

## Part IIB. Nuclear and Process Instrumentation

R. L. Moore



OAK RIDGE NATIONAL LABORATORY

OPERATED BY UNION CARBIDE CORPORATION FOR THE U.S. ATOMIC ENERGY COMMISSION

ORNL-TM-729

Contract No. W-7405-eng-26

INSTRUMENTATION AND CONTROLS DIVISION

# MSRE DESIGN AND OPERATIONS REPORT

## Part IIB. Nuclear and Process Instrumentation

R. L. Moore



SEPTEMBER 1972

OAK RIDGE NATIONAL LABORATORY
Oak Ridge, Tennessee 37830
operated by
UNION CARBIDE CORPORATION
for the
U.S. ATOMIC ENERGY COMMISSION

## CONTENTS

## ACKNOWLEDGMENTS

This report represents the collective efforts of many persons other than the author of record who served as author of some sections and editor of others. The author wishes to thank all those who contributed to the design effort and whose work is reported herein and particularly wishes to acknowledge the contributions of the following members of the ORNL Instrumentation and Controls Division and Reactor Division staffs.[1]

A. H. Anderson for the complete preparation of Sect. 6.12.

G. H. Burger[2] for the complete preparation of Sects. 6.14, 6.15, and 6.16.

T. M. Cate for assistance with preparation of Sects. 3.14 and 3.15 and 5.2 and 5.3.

D. G. Davis for assistance with preparation of Sects. 6.4, 6.7, and 6.18.

R. H. Guymon, Chief, MSRE Operations, and members of his staff[3] for review of Chaps. 5, 6, and 7, and portions of Chaps. 3 and 4.

P. G. Herndon for the complete preparation of most of Chap. 4 and Sects. 3.11, 3.13, 6.1, 6.3, 6.13, 6.20, 6.23, 7.2, and 7.3, as well as for extensive assistance in reviewing and editing other sections of the report. It would not be inappropriate to list him as co-author.

J. W. Krewson for assistance with preparation of Sects. 6.9, 6.10, 6.11, and 6.12.

J. L. Redford for assistance with preparation of Sects. 3.1 through 3.10 and Sect. 3.15.

J. R. Tallackson for consultation and advice during initial stages of preparation of the report.

B. J. Jones, E. C. Keith, and P. E. Smith[4] for drawing many of the report figures.

Mrs. Viriginia Farris for patiently typing and retyping the many drafts required to complete this report.

1. Except as noted, those listed are members of the ORNL Instrumentation and Controls Division.

2. Formerly with ORNL Instrumentation and Controls Division, now with Union Carbide Corporation, Mining and Metals Division, Niagara Falls, N.Y.

3. ORNL Reactor Division.

4. Formerly with ORNL Instrumentation and Controls Division, now with Tennessee Valley Authority, Knoxville, Tenn.

## FOREWORD

This report is the second of two parts describing MSRE Nuclear and Process Instrumentation. In the first part,[1] Chaps. 1 and 2 provide broad and quite general descriptions which are intended to convey the criteria and philosophy used as the basis for the design of the MSRE Instrumentation and Control Systems. Chapter 2 also contains detailed descriptions of the Nuclear Instrumentation, the Health Physics, Process, and Stack Radiation Monitoring Systems, the Data Logger Computer, and the Beryllium Monitoring System. Chapters 3 through 7, which are contained in this volume, provide detailed descriptions of the MSRE Process Instrumentation and the Electrical Control and Alarm Circuitry. The general scope and arrangement of both parts of this report are outlined in the following summary.

1. *MSRE Design and Operations Report, Part IIA*, ORNL-TM-729.

# SUMMARY – PART IIA

## 1. MSRE Instrumentation and Control System – General

**1.1 Introductory remarks.** This section discusses generally the types of instrumentation to be found in the MSRE and highlights those features of the MSRE that are of particular interest to the instrumentation and controls designer.

**1.2 Design considerations.** This section discusses the considerations which influenced the design, particularly those which are unique or are peculiar to the MSRE.

**1.3 Plant instrumentation layout.** This section describes the physical layout of the instrumentation system, gives a general description of the overall layout (Sect. 1.3.1), and then describes each area separately. The instrument systems are located by area, and the routing and installation of their interconnections are included.

**1.4 Plant control system.** This section gives a broad, all-inclusive picture of the entire MSRE instrumentation and control system, including control of auxiliary equipment and the instrument power system. The "mode control" used to guide reactor operation is discussed with diagrams which define (or give) the conditions for the various modes (prefill, operate-start, operate-run). The intent of this section is to outline the main subsystems and not to dig into fine structure. The reader is referred to Sects. 2 to 7 for details.

**1.5 Safety system.** This section discusses the safety-grade instrumentation and controls associated with the MSRE safety system. The discussion includes general design criteria (designer's guidelines) illustrated by a typical system. The entire safety system, what it does, and why, are tabulated and diagrammed.

## 2. Safety Instrumentation and Reactor Control

**2.1 Nuclear instrumentation.** The instrumentation in the neutron channel up to, but not including, the panel electronics is described. The neutron penetration, including the guide tube assembly, is described, and the interconnecting cabling, junction boxes, etc., associated with transmission of signals to the control rooms are diagrammed.

**2.2 $BF_3$ instrumentation.** This section describes briefly the instrumentation associated with the sensitive $BF_3$ channels used for low-level flux measurement and control. The interlocks associated with the $BF_3$ channels are discussed in Sect. 2.6.

**2.3 Wide-range counting channels.** The wide-range counting channels are described with block diagrams and an explanation of their operation. This is followed by descriptions of the chamber assembly, the chamber and the associated electronic circuits, and the electromechanical drive. The interlock and control functions associated with the wide-range counting channels are covered in Sect. 2.6.

**2.4 Linear power channels.** This section describes briefly the linear power channels and includes block diagrams and descriptions of the compensated ion chamber and the picoammeter.

**2.5 Rod scram safety system.** This section contains a thorough description of the rod scram safety system. Block diagrams and circuit diagrams illustrate the discussion; the associated electronics are discussed in detail.

**2.6 Shim and regulating rod control system.** This section gives a thorough description of the shim and regulating rod control system. Block diagrams and composite elementary circuit diagrams for both the servo rod and the shim rods are included. The "confidence" interlocks originating in the wide-range counting channels (see Sect. 2.3) are also described.

**2.7 Control rods and drives.** This section describes the control rods and the rod drive units. A description of the pneumatic fiducial zero position indicator is included.

**2.8 Load control system.** This section describes in considerable detail the control of the equipment which determines the reactor load, namely: radiator, radiator doors, blowers, and bypass damper.

**2.9 Health physics monitoring.** This section describes the health physics instrumentation and includes a general description of the individual types of instruments used plus a description of their interconnections to form an integrated alarm system.

**2.10 Process radiation monitors.** The components and electronics used to monitor process lines carrying helium, water, off-gas, etc., are described. The operation of interlocks and alarms is covered in Sect. 4.

**2.11 Stack monitoring system.** This section describes the radiation monitoring installed in the off-gas stack. The components, how they function, and their purpose are included in the discussion.

**2.12 Data logger computer.** This section gives a general, broad description of the data system. Basic capabilities, operations, and purpose of the logger computer are described. (Note: The reader is referred to

manufacturers' literature and the operations manual for detailed information.)

**2.13 Beryllium monitoring system.** This section describes the system for monitoring beryllium concentration at various points throughout the reactor building and in the air discharged through the radiator stack. This system is discussed further in Sect. 3.3.6.

## PART IIB

### 3. Process Instrumentation

This section provides a general description of the instrumentation in the various systems. Included are descriptions of major control loops with drawings of individual control loops and their instrumentation. The principles of operation of the various components and most descriptions of control circuit operations are discussed in other sections.* In general, sufficient descriptive material, augmented by flowsheets and diagrams, is included so that a reader with a reasonable knowledge of instrumentation systems can determine the arrangement and composition of the process instrumentation system.

### 4. Electrical Control and Alarm Circuits

**4.1 General description.** This section introduces in very general terms the types of circuits to be found in the MSRE system and how they are related. This text material provides the background for succeeding sections (4.2 to 4.15).

**4.2 to 4.10 Master control circuits, etc.** These sections describe the electrical control circuits with engineering elementary schematic circuit diagrams and, where instructive, include the nonobvious interlock functions and explain why they are required. The material presented enables a person with a reasonable knowledge of instrumentation and control systems to understand the operation of the control circuits.

**4.11 Jumper board.** This section explains the purpose and describes the physical construction of the jumper board. Layout and wiring of a typical section of the board are included.

**4.12 Annunciators.** The annunciator system is described, and considerations involved in the location of annunciators are outlined. Schematics of the annunciators used and their sequence of operation are included. Their operational use is also discussed.

**4.13 Instrument power distribution.** This section outlines the system which provides the MSRE instrumentation, control circuits, and annunciators with the necessary power. Reliability considerations are included.

### 5. Standard Process Instrumentation

This section provides a general description of the various types of standard instruments used in the MSRE and includes basic principles of their operation.

### 6. Special Process Instrumentation

This section contains descriptions of the nonstandard instruments required by the MSRE; their unique or special features are outlined.

### 7. Coding Systems and Installation Practices

**7.1 Instrument number and application diagram coding systems.** This section explains the system of flow plan symbols and numbering used in the preparation of instrument applications diagrams and tabulations, with typical examples.

**7.2 Wiring practices and coding.** This section describes the system used in designing and identifying MSRE instrumentation and control wiring with typical examples of panel and interconnection wiring.

**7.3 Pneumatic tubing installation practices and coding.** This section describes the system used in designing and identifying MSRE instrument tubing installations and includes a typical pneumatic schematic circuit and a typical panel and interconnection tubing installation.

*Control circuitry associated with the sampling and enriching systems, the fuel processing system, and the off-gas sampler is discussed in Chap. 3.

# MSRE Design and Operations Report, Part IIB

## 3. PROCESS INSTRUMENTATION SUBSYSTEMS

R. L. Moore

A. H. Anderson P. G. Herndon
T. M. Cate J. L. Redford

### 3.1 FUEL SALT CIRCULATING SYSTEM

The process instrumentation for the fuel circulation system is shown in Fig. 3.1.0. This system consists of the reactor vessel, the fuel circulating pump and overflow tank, the primary heat exchanger, and all fuel salt piping interconnecting these components. All fuel-containing are located inside the reactor containment cell and are physically arranged to provide clear vertical access for remote maintenance. The process variables monitored in the fuel circulating system are:

1. pressure,
2. level,
3. temperature,
4. helium flow,
5. cooling air,
6. fuel pump motor parameters (speed, current, power, mechanical noise),
7. radiation levels and control rod positions.

#### 3.1.1 Pressure Measurements

There are four pressure-measuring elements in this system: PT-522 and PT-592, which sense the fuel pump bowl (system) pressure; PT-589, which senses the overflow tank pressure; and PT-516, which senses the pump shaft seal helium purge pressure. Details of the process tie-in of PT-522 and PT-592 are shown in Fig. 3.1.1.0. Both of these pressure transmitters tie in to line 592, which connects to the vapor space in the fuel pump bowl. Line 592 also serves as a reference pressure line for the level system described in Sect. 3.1.2. To prevent backup of the highly radioactive pump bowl gas in this line, the line is continuously purged with helium. Several safeguards have been built into the system to ensure containment of radioactive gases and/or prevent back diffusion into operating areas through the purge lines. In addition to the two check valves located inside the containment enclosure, there is a solenoid valve which closes on loss of energizing voltage and which is controlled by radiation detectors on the line. The capillary flow restrictor, FE-592, serves the double duty of ensuring a high-velocity flow region (to prevent any possible back diffusion) and providing a pressure-dropping element which allows a reasonable, qualitative flow measurement by the use of a simple pressure gage located between the restrictor and a throttling valve HV-592B. Pressure switches mounted with the pressure gage provide high and low alarm contacts which operate an annunciator in the main control room. Line 592, autoclave tubing, is doubly contained by running the tubing inside a ½-in. pipe from the pump bowl to the instrument enclosure in the special equipment room. From this point on, the autoclave tubing is not contained, since the check valves and solenoid afford reasonable protection.

The pressure transmitters are all-welded 0- to 50-psig Foxboro Electric Consotrol instruments (see Sect. 6.1). The low-pressure side of these transmitters is referenced to the containment stack via a rolling diaphragm reference chamber (see Sect. 6.2) which contains a switch to sound an alarm in the control room if the diaphragm is extended to its travel limit. This will occur only if there is a rupture or leak in the sensing bellows

of the primary transmitter. The electric and pneumatic portions of the PT-522 system are shown in Fig. 3.1.1.1. The elements in the 10 to 50 mA dc loop are the 65-V power supply, the transmitter amplifier, a precision 200-Ω resistor, used to develop a 2- to 10-V dc signal for the data logger, and a current-to-air converter. These are discussed in Sect. 5.2.2.

The current-to-air converter converts the 10- to 50-mA dc signal to a 3 to 15-psig pneumatic signal which is transmitted to high- and low-pressure alarm switches (PS-522A1 and A2), three differential pressure modifiers ($P_d$M-1000A1, B1, and C1), control pressure switch (PSS-522A), a recorder (PR-522), an indicator gage (PI-522), and a pressure alarm switch (PS-522A3).

Pressure switches PS-522A1 and A2 operate main board annunciators. Pressure switch PSS-522A is connected in control circuit 129 and shuts off the shaft seal purge flow when pump bowl pressure is high. The three differential modifiers compare the pump bowl pressure with pressures in the three drain tanks and transmit pneumatic signals proportional to the differences in these pressures to pressure switches $P_d$SS-1000A1, B1, and C1 connected in control circuits 86, 87, and 88 (see Sect. 4.3 and 4.10). The recorder (PR-522) is located on the main control board. (The second pen of this recorder is utilized for pump bowl level information.) The indicator gage (PI-522) is located on the sampler-enricher panel and is used to match sampler pressure with pump bowl pressure when preparing to sample. Alarm switch PS-522A3 is located in the sampler-enricher area and operates an annunciator on the sampler panel.

As originally installed, the conversion of the electrical to pneumatic signal was also required to operate a pneumatic control valve located in off-gas line 522 which controlled the pump bowl pressure. Deposits, presumably originating from the fuel pump lubricant plus carry-over of small amounts of fuel salt and fission products, caused repeated plugging difficulties with this valve. The amount of material causing the plugging was not large, but, because of the low helium flow rate, 3.4 liters/min, the valve orifice ($C_v$ = 0.02) was, of necessity, small and was therefore extremely susceptible to plugging. Fortunately, operating experience showed that pump bowl pressure fluctuations were extremely slow and manually controllable, so this valve was eliminated. Pump bowl pressure is now controlled manually with hand valve HV-557B, located in the vent house upstream from the charcoal traps.

The PT-592 signal system is shown in Fig. 3.1.1.2. This system differs from that of PT-522 in that it provides safety signals and has been installed in separate conduits and is separated both mechanically and electrically from its mating channel (PT-589). The primary signal loop for PT-592 consists of a dual alarm switch (see Sect. 5.2.2), which produces control action below 2 psig or above 25 psig, a 400-Ω resistor, a 65-V dc power supply, and a test switch. A second switch at the sampler-enricher prevents sampling if the pressure is greater than 10 psig. The test switch connects a variable resistor in parallel with the torque motor of the pressure transmitter. By manually varying the value of this resistor, the output of the transmitter (the 10- to 50-mA signal) can be slowly increased to exceed the alarm trip point on the fuel switches, thereby testing their operability. This operation tests the safety system channel by artifically perturbing the torque motor in the pressure transmitter (see Sect. 6.23). The only untested element in the channel is the pressure sensing bellows in the transmitter. The 400-Ω resistor is used to develop a voltage sufficient to supply requirements of the input of the isolation amplifier, which separates and decouples the safety portion of the signal from the control-grade portion. The output of the isolation amplifier is also a 10- to 50-mA signal and is used to operate an indicator, a high alarm switch, and to provide a signal to the data logger. A 200-Ω resistor develops the signal voltage to the data logger which provides additional indication and alarm. The PT-589 loop is identical to that of PT-592 except that its process connection is a tie-in to the overflow tank (which normally has free communication with the pump bowl) rather than into the vapor space of the pump bowl.

The PT-516 signal system is shown in Fig. 3.1.1.3. This signal is developed by a weld-sealed 0 to 50-psig Foxboro pressure transmitter identical to those previously described in Sect. 3.1.1. The transmitter is referenced to atmospheric pressure through a rolling diaphragm reference chamber. The 10- to 50-mA signal is recorded in the auxiliary control room and converted to a voltage signal which is sent to the data logger. This pressure indication is used by the operator to maintain the helium shaft seal purge pressure greater than the pump bowl pressure, thereby ensuring downward flow through the seal. There are no alarms or automatic control action associated with this signal. Purge flow control in line 516 is discussed in Sect. 3.1.4.

### 3.1.2 Level Measurements

There are four level measurements made of two process variables: salt level in the pump bowl and in the overflow tank. Redundant measurements are made in

both places for increased reliability and, in the case of the overflow tank, to satisfy the redundancy requirement of the safety system.

The pump bowl level measurement instrumentation is diagrammed in Fig. 3.1.2.0. The technique is one used extensively throughout industry. An open-ended tube, the dip tube, is immersed in the fluid to a depth below the lowest expected fluid level. The gas pressure required to overcome the liquid head above the bottom of the tube and produce a constant low rate of gas flow through the tube (which bubbles into the gas space above the liquid surface) is a measure of the liquid level. Temperature-induced density changes in the pump bowl salt during normal operation are slight, so that measurement accuracy is virtually unaffected by temperature variations (other effects on density are negligible). The dip tubes are staggered in depth of submersion. Therefore, the pressure difference in the two dip tubes gives some indication of the fluid density. These level measurements are made with weld-sealed differential pressure transmitters (see Sect. 6.3), which measure the difference between the helium pressures in the different tubes and in the gas spaces above the salt surface in the pump bowl and overflow tank. The transmitter output is a 10- to 50-mA dc electrical signal. These transmitters are located in a containment enclosure in the special equipment room. The helium purge is provided in an identical manner as the purge for PT-522 (see Sect. 3.1.1). The solenoid valves are of the all-welded type described in Sect. 6.20 and are used to equalize pressures between the dip tube and reference lines and to block purge flow through selected lines on operator request or in the event of high radiation. Equalizing provides a known signal for checking the zero calibration of the differential pressure transmitters.

Since the fuel salt has such a high freezing temperature, a heated surge volume was provided on each dip leg in the fuel pump bowl. Being physically located in the gas space of the pump bowl, the surge volume remains at pump bowl gas temperature. Its volume is approximately ten times the volume of the purge line between the check valves and the pump bowl, so that no salt will back up into the line and freeze during the worst credible pressure transient in the fuel system.

The electronic Consotrol instrumentation (ECI) (10- to 50-mA) signals from the pump bowl level transmitters (LT-593 and LT-596) are passed through 200-Ω resistors to develop 2- to 10-V signals for the data logger and are then converted to pneumatic pressure signals with Foxboro current-to-air converters. The pneumatic signals so obtained are switched by solenoid valves, so that either can serve as input to the recorder in the control room and to control switches which provide high and low alarms and prevent operation of the fuel pump under low salt level conditions. The switching circuits are described in Sect. 4.9.8. An indicator, operated by each signal, is located in the transmitter room.

Since the fuel system can be filled with either fuel or flush salts and since there is a difference in density of the two salts, provisions have been made to remotely and automatically change the span of the two fuel pump bowl bubbler differential pressure transmitters, LT-593 and LT-596, so that correct level is indicated by the readout device regardless of which salt is in the circulating system. This is accomplished by altering the feedback gain and zero current of LT-593 and LT-596 as described in Sect. 6.23. Further discussion of the level system is presented in Sect. 6.8.

The overflow tank level measurement system is diagrammed in Fig. 3.1.2.1. Since there is usually very little salt in the overflow tank, no provisions for a surge volume were made in this instance.

The ECI (10- to 50-mA current) signals from the overflow tank level transmitters (LT-599 and LT-600) are both considered process safety signals and are treated accordingly. Safety system requirements are described in Sect. 1.2.3, Part IIA of this report. The level transmitters are located inside a containment enclosure in the special equipment room. The transmitter amplifiers, switches, and isolation amplifier are all located in auxiliary board No. 8 in the auxiliary control room. An in-service testing system consisting of a variable resistor, which can be manually paralleled with the torque motor of the level transmitter, provides a method of ensuring that the switches are operating at the correct set point and that the system is capable of producing an output of sufficient magnitude to actuate the switches.

The safety switches associated with these channels are utilized to actuate an alarm in the main control room and to initiate an emergency fuel drain in the event of high level in the overflow tank.

Included in the current loop is a 400-Ω resistor and an associated current-to-current converter which provides a secondary isolated current loop for indicators in the auxiliary control room and the transmitter room and a 2- to 10-V signal (developed across a precision 200-Ω resistor) for the data logger input.

Solenoid valves, check valves, and helium purge flow restrictors, are provided. Their action is identical with those for the pump bowl level transmitters.

A level measurement is also made of the oil level in the oil catch tank which traps any oil which might be

carried over in the upper gas seal leakage gas stream. This measurement is made by use of a weld-sealed differential pressure transmitter (LT-524), whose output operates a switch (LS-524C) and an indicator (LI-524C) on the auxiliary control board and also develops a signal for the data logger across a 200-Ω precision resistor. The switch is used to operate an alarm lamp in the main control room on high level (see Fig. 3.1.0). The oil catch tank is located in the special equipment room and can be drained of any accumulated oil during times when the reactor is subcritical.

### 3.1.3 Fuel System Temperatures

Most temperatures in the fuel system are measured by means of grounded-junction ⅛-in.-OD Inconel-sheathed, magnesium oxide-insulated Chromel-Alumel thermocouples which are Heliarc welded to pads on the vessels and piping (see Sect. 6.7). Exceptions to this are the ungrounded junction thermocouples on line 103 (which is a resistance-heated line) and the 1/16-in.-OD individually sheathed Chromel and Alumel wires utilized for the safety thermocouples.

Figure 3.1.3.0 shows a typical (control-grade) thermocouple system. In general, there is at least one thermocouple on the piping at each heater location in the system. Additional thermocouples are located at pipe supports and at any other region whose temperature might be expected to deviate from the average system piping temperature.* Most of these temperatures are routed via the thermocouple patch panel to either the temperature scanner (Sect. 6.14) or the data logger.

The temperature measurements which require special readouts or treatment are:

1. safety system,
2. freeze flanges,
3. control rod servo input,
4. freeze valve.

A typical safety-grade thermocouple system is shown in Fig. 3.1.3.1. The safety thermocouples are individually sheathed wires, individually attached to line 100 near the pump bowl. Individual wires were chosen for this application so that detachment of the wire from the piping would be detectable by the open circuit burnout feature of the emf-to-current converter. Located in the safety panel and connected in series with the safety thermocouple is a second thermocouple which can be heated in order to test the system. without disconnecting or otherwise disturbing the safety circuitry. The two series thermocouples provide an imput signal to a Foxboro emf-to-current converter (see Sect. 5.2.2) whose current output operates a dual switch. Contacts on these switches actuate the fuel drain demand circuits, a high-temperature alarm in the control room, a high-temperature reverse to insert all rods, and a high-temperature scram to drop all rods. The fuel drain demand circuits are described in Sect. 4.7. The reverse contacts are connected in a two-out-of-three coincidence arrangement in circuit 207 as shown in Fig. 4.1.19. The scram contacts are also connected in a two-out-of-three arrangement in the nuclear safety system (see Sect. 4.5). Each current loop contains a 400-Ω resistor and associated isolation amplifier whose output is used for a temperature indication in the safety panel and to develop the 2- to 10-V signal, required for the data logger, across a 200-Ω resistor.

A typical freeze flange thermocouple system is shown in Fig. 3.1.3.2. Six thermocouples are installed on each freeze flange. Three are connected to the data logger; two are connected to Electra Systems switches (see Sect. 6.15), which alarm and operate lamps on the graphic display panel, indicating out-of-limits temperature (high or low); and the remaining thermocouple is utilized for occasional readout only.

The temperature measuring system used for the control rod servo system is shown in Fig. 3.1.3.3. Each thermocouple is connected to a Foxboro emf-to-current converter whose output (10- to 50-mA) in turn operates a recorder on the main board and supplies an input to the control rod servo system when the servo is in the temperature mode.

The temperature measuring and control system used for freeze valve FV-103 is shown in Fig 3.1.3.4. Thermocouples mounted on the freeze valve are used to operate six Electra Systems switches, two points on a multipoint recorder, and a Foxboro emf-to-current converter. The converter output is used to develop a 2- to 10-V signal for the data logger and to operate a Foxboro current-to-air converter whose output is fed to a pneumatic controller which controls the air to valve HCV-919A1, which, in turn, controls the cooling air to the freeze valve. Since it is imperative that freeze valve 103 be able to thaw regardless of the state of containment, special restrictor valves were installed between the supply and vent sides of HCV-919A1 and 919B1, so that these valves could close (shutting off cooling air to freeze valve 103) regardless of the position of the block valves. Valves HCV-919A2 and

*All thermocouples are listed by number in the MSRE Reactor Process System Thermocouple Tabulation, ORNL Dwg. A-AA-B-40511. This tabulation also identifies the readout instrument and, where applicable, the patch panel terminal assignment.

HCV-919B2 are operated by the freeze valve control circuits discussed in Sect. 4.3.

### 3.1.4 Helium Purges

There are seven helium purges supplied to the primary reactor system. Six of these are the bubbler and reference line supplies for the fuel pump bowl level and overflow tank level measurements and amount to approximately 2 liters of helium per minute (at 25 psig) total for the bubblers. The other supply is the purge for the lower gas seal in the pump bearings, most of which ends up in the pump bowl. The flow measuring system for the gas seal flow in line 516, shown in Fig. 3.1.4.0, uses a matrix-type flow element (see Sect. 6.19). The pressure drop across the matrix is approximately 40 in. $H_2O$ with a 300-liters-per-hour helium flow and varies directly with flow. This pressure drop is measured with a seal-welded Foxboro differential pressure transmitter with 3- to 15-psig air output (see Sect. 6.3). The 3- to 15-psig pneumatic signal from the transmitter supplies a strain gage transducer (Sect. 5.3.1) whose 0- to 10-mV output goes to the data logger, a switch which alarms in the control room on low flow, and a Foxboro indicator/controller (Sect. 5.3.1) which is used to control the purge flow via valve FCV-516. A solenoid valve in the control valve supply line prevents the valve from opening if the pump bowl pressure is in excess of 20 psig.

The only helium flow that is measured as it leaves the pump bowl is the upper-gas-seal leakage from the pump bearing (see Fig. 3.1.0). This flow is sensed by a matrix-type flow element (FE-524) which provides a pressure drop of approximately 0 to 40 in. $H_2O$ for a helium flow of 0 to 4.5 standard liters per hour. A seal-welded Foxboro electric differential pressure transmitter (Sect. 6.3) placed across the taps of this matrix transmits a 10- to 50-mA dc signal which is proportional to the flow in line 524. This signal is then indicated and alarmed in the main control room and, by use of a 200-Ω resistor, sent to the data logger.

The main off-gas line from the pump bowl (line 522) has no flow-measuring sensors.

A second use of the helium purge (through the bubbler dip tubes) to the overflow tank is to provide a means of pressurizing the tank to push any salt that has accumulated there back to the pump bowl. A manually operated pneumatic valve (HCV-523) in the gas vent from the overflow tank is closed, allowing the helium purge to build up sufficient pressure to lift the salt back to the pump bowl. The air supply line to the valve is normally left in a capped position, unless a burp is in progress, to ensure that HCV-523 is not inadvertently closed.

### 3.1.5 Component Cooling Air

Several of the components in the reactor system require cooling in order to maintain reasonable temperatures. The air is supplied from a component cooling pump located in the special equipment room which recirculates the cell air. Air flow to the individual components is controlled by means of individual manually controlled air-operated throttling valves which are located in the reactor cell. Since the reactor cell is maintained at a negative pressure of approximately 2 psig, the reference side of all valves is referenced to the stack suction rather than to the cell in order to prevent changes in valve position from occurring as the cell pressure is varied. Components which receive cooling air in this fashion are the rod drive assemblies, the reactor neck, freeze valve 103, and the fuel circulating pump. The pressure drop across each of the valves supplying this cooling is maintained constant by PCV-960, which is described in Sect. 3.6.1.

The quantity of cooling air flowing to the fuel pump bowl (line 903) is controlled by throttling valve HCV-903 and is sensed by means of an orifice in the line upstream of the throttling valve (see Fig. 3.1.0). A pneumatic differential pressure transmitter (FT-903B), located in the transmitter room, provides a signal to an indicator (FI-903B) in the transmitter room. No automatic control or alarm action is taken from this parameter. Valve HCV-903 is manually positioned by means of a loading station, integral with FI-903B, which supplies air to the valve operator through a 2 to 1 booster relay, FM-903A.

A rather unique use of the cooling air to the control rod thimbles is the fiducial zero rod position indicator (see Sect. 2.7.2 in Part IIA of this report). This system consists of a pneumatic bridge assembly, one element of which is an orifice located near the lower limit position of the rod. As the rod passes through this orifice a change in differential pressure, sensed by a differential pressure transmitter (ZT-987A), is obtained. Manually operated valves HSV's 986, 987, and 988, located in the transmitter room, are utilized to select which rod is to be checked. Output of the transmitter is indicated on a receiver gage (ZI-987A) which is also located in the transmitter room.

### 3.1.6 Fuel Pump Motor Parameters

The fuel pump motor parameters, such as speed, current, voltage, power, and bearing noises, are indi-

cated in the main control room. These signals are also sent to the data logging system and, in the case of speed and current, sent to the control circuits.

The speed indicating system (Sect. 6.16) is a dual track system, each track consisting of a magnetic-type speed pickup, FP-E1 or E2, which delivers a pulse output as each tooth of a gear attached to the pump motor shaft passes it. Pickup FP-E3 is an installed spare. The gear used contains 60 teeth, so the resulting output of the speed pickup is one pulse per second per revolution per minute. This pulse output is utilized to drive a digital counter in the main control room and a pulse count-rate meter (SIT-FP-E1 or E2) in the transmitter room. Electronically controlled relays in the count-rate meter provide contacts which are used to actuate low-speed alarms and to disable the reactor fill permit and run mode circuits on low pump speed. A low-level dc signal from the count-rate meter is used to provide a speed signal to the data logger and a meter readout in the main control room.

Voltage and power measurements are made by use of current and potential transformers EiE-Fp-D1 and D2 and EvE-Fp-D1 and D2 in the pump motor leads outside the containment. The secondary windings of these transformers are connected to an ammeter (EiI-FP-D), wattmeter (EwI-FP-D), and watt converter (EwM-FP-D) in the main control room and to a watt recorder (EwR-FP-D) in the transmitter room. The signal from the converter is sent to the data logger.

Three additional current transformers (EiE-FP-G1, G2, and G3) supply three currents (one for each motor lead), each of which operates a pair of relays. These relays are utilized in the nuclear safety system to automatically increase the sensitivity of the safety flux measurement by a factor of 1000 in the event of high or low current to the pump motor. This system is explained in more detail in Sect. 2.5, Part IIA of this report.

The sensors ($X_{db}$-FP-F1 and F2) used for noise pickup are high-temperature ceramic microphones (Sect. 6.17) which, with the coolant pump microphones, are connected to an audio amplifier and speaker system in the auxiliary control room. No automatic action is taken from these noise measurements.

### 3.1.7 Radiation and Control Rods

The radiation monitoring systems consist of two wide-range counting channels, a $BF_3$ counting channel, three safety channels, two linear channels, and three ambient gamma level channels. There are three control rods in the reactor which are used for shutdown margin when inserted and as temperature controllers when withdrawn. These systems and their operation are fully covered in Part IIA of this report, Sects. 2.3 and 2.7.

## 3.2 FUEL SALT DRAIN AND FILL SYSTEM

The fuel salt drain and fill system is shown in Fig. 3.2.0. This system consists of a fuel flush tank, two fuel drain tanks and their associated steam domes, the fill piping and freeze valves, and the drain tank pressurization system which is utilized to fill the reactor system. All components are arranged for clear vertical access for maintenance purposes.

The process variables monitored in the fill and drain system are:

1. pressure,
2. level,
3. weight,
4. temperature,
5. radiation.

### 3.2.1 Pressure

The system for pressurizing the drain tanks is shown in Fig. 3.2.1. Helium from the cover gas system (at 40 psig) enters through a capillary flow restrictor (FE-517) which limits the maximum rate of pressurization of the drain tank system. A weld-sealed 0- to 50-psig pressure transmitter (PT-517) senses the pressure in line 517. This transmitter is located outside the biological shielding in the electrical service area, and its associated amplifier is located in the transmitter room. In this application the transmitter bellows is, in itself, part of secondary containment; it is not connected to a rolling diaphragm reference chamber. The output current of this transmitter (10 to 50 mA dc) passes through a 200-Ω resistor, to develop a 2- to 10-V signal for the data logger, and a current-to-air transducer whose 3- to 15-psig pneumatic output is the input to an indicator/controller on the main board in the control room. The output of the controller operates a weld-sealed control valve, PCV-517. Solenoid valve HCV-517 closes or prevents the operator from opening PCV-517 if the helium pressure drops below 28 psig or if an emergency fuel drain is requested. When HCV-517 is energized, PCV-517 controls the pressure in line 517 to the value manually set into the indicator/controller. The helium supply to line 517 is common to both drain tanks and to the flush tank. Since the control scheme for all drain

tanks is identical, only the flush tank control scheme will be discussed.

HCV-576Al is a weld-sealed pneumatically operated on-off valve located in the north electric service area. It is controlled by a solenoid valve which prevents the pneumatic valve from opening except when filling the system from or when transferring to or from the flush tank. Two check valves downstream of HCV-576Al serve as additional isolation of the drain tank from the cover gas system and, together with HCV-576Al, prevent the escape of radioactive gases and/or particulates through line 576. The two check valves, a pressure transmitter (PT-576), and a manually operated block valve are located in an instrument enclosure in the north electric service area. The pressure sensor is a weld-sealed 0- to 50-psig ECI transmitter which is used to indicate the flush tank pressure at all times. The reference side of the pressure transmitter is referenced to the containment stack by means of a rolling diaphragm reference chamber. The transmitter and reference chamber system are the same as described in Sect. 3.1.1 for PT-522. The output current of the transmitter (10 to 50 mA dc) passes through a 200-Ω resistor, which develops a 2- to 10-V signal for the data logger, and a current-to-air transducer. The pneumatic output of the current-to-air transducer (3 to 15 psig) operates four pressure switches used for high and low alarm and control functions and also operates recorder PR-576 on the main control board.

A small helium purge stream is provided through lines 519, 553, and 555 to prevent back diffusion of radioactive gas from the flush tank to PT-576 when HCV-576Al is closed. As these lines bypass valves PCV-517 and HCV-576Al, they offer a possible path for escape of radioactivity and are therefore a part of the containment system. Weld-sealed solenoid valves ESV-519A and ESV-519B serve as redundant block valves and are operated by the containment safety control circuits so that the same containment safety interlocks that close PCV-517 and HCV-576Al also close ESV-519A and ESV-519B. The capillary restrictors determine the purge flow rate and, because of the higher gas velocity in the capillaries, also serve to prevent back diffusion of radioactivity into line 553.

The tank may be vented to either the off-gas system, through vent valve HCV-577Al, or to the pump bowl, through equalizer valve HCV-546Al. HCV-577Al and HCV-546Al are pneumatically operated weld-sealed on-off valves. Both valves are located inside the drain tank cell. The reference side of the valve operators of both valves is vented to the containment air exhaust stack rather than to cell atmosphere so that changes in drain tank cell pressure will not affect the requested position of these valves. Block valves in the air supply and vent lines close on high drain tank cell pressure. Position switches mounted on the valves indicate, in the control room, the condition of the valve. In the case of valve HCV-546Al, the position switch indicates when the valve is more than 50% open since this valve must be open for an orderly drain of the system. In all other cases the valve position switches are adjusted to indicate when the valve is fully closed. The valves are operated by solenoid valves HCV-564A2 and HCV-577A2 which are in turn operated by the control circuits (see Sect. 4.2.4). They may be manually operated, subject to control circuit restrictions, by switches located on the main control board.

### 3.2.2 Salt Inventory

The inventory of salt in the two fuel drain tanks and the fuel flush tank is sensed by two independent means. The first is a conductance-type probe (Sect. 6.10) used as a single-point high- and low-level sensor. This instrument gives a high and a low lamp indication in the control room and in the transmitter room. There is no control action associated with the single-point level system. These probes are identified as LE-FD1A and -B, LE-FD2A and B, and LE-FFTA and B in Fig. 3.2.0.

The second system involves the use of a pair of pneumatic weigh cells (Sect. 6.6) supporting each tank. Figure 3.2.2 shows a weigh system which is typical for all tanks. The tare signal for the weigh cells is provided from pressure regulators on the weigh cell control panels located in the transmitter room. The tare signal is read on a 100-in. mercury manometer in the transmitter room and is referenced to the drain tank cell so that changes in cell ambient pressure will not affect the live reading. Pneumatic switching allows the use of the same manometer for indication of the tare signal of all weigh cells. The live signal from each of the weigh cells is indicated on a second 100-in. manometer with similar switching, also located in the transmitter room. The live signal is then reduced in amplitude from a nominal 3- to 45-psig signal to a 3- to 15-psig signal. The two 3- to 15-psig signals are then averaged to give a single 3- to 15-psig signal which is proportional to the total live weight of a given tank. This average signal is recorded in the main control room and converted to a 0- to 10-mVdc electric signal by means of a strain gage transducer. The millivolt signal is sent to the data logger. A pneumatic controller with zero proportional band integral with the weight recorder acts as a front-adjustable pneumatic low-level switch. The 3- to

15-psig signal from this switch operates a pressure switch which in turn actuates an annunciator in the main control room. To meet containment criteria, each of the pneumatic lines to the weigh cells contains a block valve which closes on high drain tank cell pressure.

The levels in the two fuel drain tank steam domes (which provide cooling for after-heat removal from the fuel salt) are measured by 0- to 20-in. $H_2O$-range electric differential-pressure transmitters (LT-806A and LT-807A). These transmitters are located in the north electric service area, and their amplifiers (LM-807A1 and LM-807A2) are located in the transmitter room. The 10- to 50-mA outputs from the transmitter amplifiers are converted to 3- to 15-psig pneumatic signals in the transmitter room. The pneumatic signals are transmitted to indicator controllers (LIC-806A and LIC-807A) which are located on the main control board. The output from the controller is used to control a throttling valve in the water supply line which feeds the steam dome to control the water level in the dome (see Sect. 3.8.2). There is no logging or alarm taken on this parameter.

### 3.2.3 Temperature

Temperatures are measured in this system in a manner similar to that in the reactor cell, that is, all thermocouples are attached to weld pads on the piping or components, and the lead wires are routed, via multiple quick disconnects, through the containment enclosure in pressurizable sealed cables to the thermocouple patch panel and pyrometer panel in the control room to be scanned, recorded, or logged on the data logger (see Sects. 3.1.3 and 6.7).

The control scheme for freeze valves 104, 105, and 106 is the same as for freeze valve 103 (see Sect. 3.1.3.4), except that, since the freeze valve for the selected drain tank is kept thawed while salt is in the reactor, a redundant shutoff valve in the cooling air supply line is not required.

In order to obtain a better indication of the temperatures in the drain tanks, a special probe with five pairs of thermocouples equally spaced along its length was installed in the tank. (see Sect. 6.7.2 and Fig. 6.7.3). This probe is not influenced by the external heaters which surround the side walls of the tank. The lowest thermocouples in the probe operate Electra Systems switches and initiate automatic filling of the steam dome with water in the event of excessively high salt temperature in the drain tank.

### 3.2.4 Radiation

There are three high-level gamma chambers located in the drain tank cell to monitor ambient gamma level. The current from these chambers is read out on a single electrometer in the auxiliary control room. Each gamma chamber in the reactor cell or drain tank is manually selectable for readout. There is no alarm or control function associated with this ambient cell activity measurement. Further discussion of these monitors is presented in Sect. 2.10, Part IIA of this report.

### 3.2.5 Fuel Loading and Storage

The fuel loading and storage system is shown in Fig. 3.2.3. This system includes the transfer freeze valves and piping, the fuel storage tank, and the fuel loading station and interfaces with the fuel processing system discussed in Sect. 3.12. The fuel storage tank serves as both a storage reservoir during loading operations and as an active component in the fuel processing system. It also provides an alternate location for long-term or emergency storage of fuel salt. The design of instrumentation and controls for this tank was therefore required to be compatible with both the reactor and the fuel processing systems.

Except for radiation, the process variables monitored in the fuel loading and storage system are the same as in the fuel salt fill and drain system.

**3.2.5.1 Temperature.** All temperature measurements in the fuel loading and storage system are made with $^1/_8$-in.-OD Inconel-sheathed, MgO-insulated Chromel-Alumel thermocouples. Measurements are made on the surfaces of lines 107, 108, 109, 110, and 111; freeze valves 107, 108, 109, and 110; and on the surface of the fuel storage tank. These thermocouples are shown in Fig. 3.13.3 and are listed in the MSRE Reactor Process System Thermocouple Tabulation (ORNL Dwg. A-AA-B-40511). Freeze valves 107, 108, and 109, lines 107, 108, and 109, and part of line 110 are located in the drain cell. Thermocouples on these components were installed and routed in the same manner as those in the reactor cell (see Sects. 3.1.3 and 6.7). The remainder of the components in the fuel loading and storage system are located in the fuel processing cell. Thermocouples on these components are installed and routed in the same manner as those in the coolant salt circulating system (see Sects. 3.3.3 and 6.7). All thermocouples are routed to the patch panel in the auxiliary control room for further distribution via the pyrometer panel to indicators, switches, scanner, or logger.

The temperatures of freeze valves 107, 108, 109, 110, and 111 are monitored and controlled in a manner similar to that of freeze valve FV-103 (see Sect. 3.1.3.4), the difference being in the control from the center thermocouple. Since these valves are either deep frozen or thawed, there is no need for proportional control of the center temperature. The cooling air supply for freeze valves FV-107, 108, and 109 is supplied by the component coolant pump since these valves and lines are inside of the fuel drain tank cell. The cooling air supply for freeze valves FV-110, 111, and 112 is supplied by the component coolant pump (which also supplies the freeze valves in the coolant system). The pressure output of the pump is controlled by a vent valve which bypasses a portion of the pump output to atmosphere. An alternate supply of cooling air is the service air compressor whose output is further regulated by a self-contained line-mounted high-capacity pressure regulator.

**3.2.5.2 Salt inventory.** The inventory of salt in the fuel storage tank is sensed by two independent means. The first is a weigh system, identical to the weigh system for the fuel drain tanks (see Sect. 3.2.2), whose output is recorded at the chemical processing panel in the high bay main control room and on the data logger. The second system utilizes an ultrasonic level probe (see Sect. 6.11) which performs the same function as the conductivity level probes used in the drain tanks (see Sect. 3.2.2). The ultrasonic probe was necessitated in this case because of the corrosion rates expected in the fuel storage tank which were much higher than in the other drain tanks and was therefore not compatible with the thin wall construction of the conductivity probes. The ultrasonic probe, which operates indicator lamps in the transmitter room and main control room, is relatively insensitive to corrosion effects.

**3.2.5.3 Pressure.** Measurement and control of pressure in the fuel storage tank are discussed in Sect. 3.13.5.1.

**3.2.5.4 Fuel loading station.** The fuel loading station is the same as the one used for filling of the coolant system and consists of two salt cans inside of heated furnaces. Pressurization of the gas space in the cans, by means of helium pressure controlled by line regulators PCV-611 and -612, pushes the salt out of the can and into the system. Two thermocouples TE-SST-1 and TE-SST-2 monitor the temperature in the salt cans.

**3.2.5.5 Fuel salt filter.** Instrumentation and control of the fuel salt filter are discussed in Sect. 3.13.5.10.

## 3.3 COOLANT SALT CIRCULATING SYSTEM

The process instrumentation for the coolant salt system is shown in Figs. 3.3.0 and 3.3.1. This system consists of the coolant circulating pump; the radiator (salt-to-air secondary heat exchanger) and its cooling fans and drain (freeze) valves; and all coolant salt piping interconnecting these components. All coolant salt components are located in the coolant cell, which is completely accessible when the reactor is subcritical for any maintenance or repair.

The process variables monitored in the coolant system are:

1. pressure,
2. level,
3. temperature,
4. flow,
5. radiation,
6. coolant pump motor parameters,
7. beryllium concentration.

### 3.3.1 Pressure Measurements

The only pressure measurement made on the coolant salt circulating system is that of the pump bowl cover gas. This measurement is made indirectly on reference pressure line 594, which is purged to minimize back diffusion. The sensing pressure element PT-528A1 is a 0- to 50-psig Foxboro seal-welded electric pressure transmitter (Sect. 6.1), which is referenced to coolant cell ambient pressure. The 10- to 50-mA electric signal from the transmitter is routed to the transmitter room where it passes through a 200-Ω resistor (PM-528A2) to develop a 2- to 10-V signal for the data logger and is converted to a 3- to 15-psig pneumatic signal by current-to-air transducer PM-528A3. The pneumatic signal is transmitted to the main control room where it serves as input to recorder-controller PRC-528A and switches PS-528A1, PS-528A2, and PSS-528A. Two of these switches operate a common (high-low) annunciator on the main control board. The third is interlocked in the control circuit (see Sect. 4.2.5). PRC-528 controls a throttling valve located in the main off-gas line from the coolant pump bowl which, in turn, automatically regulates the coolant system overpressure. The throttling valve (PCV-528) is weld-sealed (see Sect. 6.5).

### 3.3.2 Level

The salt level in the coolant pump bowl is measured by a bubbler system similar to that used on the fuel pump. A pair of seal-welded electric differential pressure transmitters (LT-595C and LT-598C) (see Sect. 6.3) sense the pressure differences between the dip tubes and a reference and transmit 10- to 50-mA electric signals proportional to the salt level to the transmitter room where they are converted to 2- to 10-V signals for the data logger by resistors LM-595C2 and LM-598C2 and to 3- to 15-psig pneumatic signals by converters LM-595C3 and LM-598C3. The pneumatic signal is indicated in the transmitter room on board-mounted gages LI-595C and LI-598C. Solenoid valve HCV-598C1 is used to select one of the signals for recording, alarm, and control. The selected signal is transmitted to recorder LR-595 and five switches in the main control room. Switches LS-595C2 and C3 operate a common (high-low) annunciator on the main control board. Switches LS-595C1 and C4 and LSS-595C2 are used as interlocks in the control circuits (see Sects. 4.2.3, 4.2.4.1, and 4.2.4.2). The system for purging the bubbler and reference lines is functionally identical to that used for the fuel system bubblers; however, since the coolant system is in itself secondary containment, double containment of lines and components was not required.

A third float-type level transmitter was also installed on the coolant pump bowl (see Sect. 6.9). The output of the ball float transmitter is an electric (1000 Hz) signal which is detected, recorded, and converted to a 3- to 15-psig pneumatic signal by an integral (Foxboro Dynalog) recorder-converter (LR/LM-CP-A) located in the transmitter room. The pneumatic signal is converted to a 0- to 10-mV dc signal for the data logger by a strain gage transducer (LM-CP-A2). Provisions were made to permit selection of the pneumatic signal from the ball float transmitter instead of the bubbler system signals for transmission to the main board recording and control devices discussed above. Since the ball float transmitter was a developmental device installed primarily for long-term proof testing, it has been used as a backup system for the bubblers.

The level in the oil catch tank is sensed by a 0- to 80-in. water weld-sealed electric differential pressure transmitter (LT-526A). The 10- to 50-mA dc electric signal from the transmitter operates an indicator (LI-526A) and a switch in the auxiliary control room. The switch contacts operate an indicator lamp on the main control board. The transmitter output is also converted to a 2- to 10-V signal for the data logger by resistor LM-526A2.

### 3.3.3 Temperature

All coolant salt temperatures are measured by means of $\frac{1}{8}$-in.-OD Inconel-sheathed magnesium oxide-insulated Chromel-Alumel thermocouples which are Heliarc welded to the surfaces of vessels and piping except on the radiator tubing where a metal strap is used in lieu of the Heliarc weld method of attachment. There are approximately 300 thermocouples in the coolant system. All coolant salt system thermocouples (except those on the radiator) are terminated in single Thermo Electric thermocouple disconnects. From this disconnect, individual thermocouple extension wires are routed to a junction box. All thermocouples from the radiator are terminated directly in junction boxes; from the junction boxes, all thermocouple lead wires are routed to the thermocouple patch panel for further distribution (see Sect. 6.7).

Exceptions to the above are three safety thermocouples (TE-202A1, B1, and C1). Signals from these sensors, in conjunction with coolant salt flow, are used to initiate closure (drop) of the salt-to-air radiator doors and an emergency coolant drain in the event of low radiator outlet temperature or low salt flow (see Sect. 2.8.6). The safety thermocouples are individually sheathed Chromel-Alumel wires, attached and insulated in the same manner as the reactor outlet safety thermocouples discussed in Sect. 3.1.3.1, so that the instrument burnout feature can be utilized to detect detachment of the hot junction from the piping which would give false indication of pipe wall temperature. As in the reactor outlet temperature safety system, a second thermocouple, which can be heated, is installed in series with each thermocouple so that testing of the temperature-sensing channel can be performed without disturbing the circuitry. The test devices which incorporate these thermocouples are designated TM-202A5, B5, and C5. Extension wiring from these thermocouples is routed, in individual conduits for each safety channel, to the safety panel in the auxiliary control room where the signals are converted to 10- to 50-mA dc current signals by emf-to-current converters TM-202A1, B1, and C1. This current signal operates switches TSS202A2, B2, and C2, which initiate the safety action discussed above, and is the input to isolation amplifiers TM202A3, B3, and C3. The output of these amplifiers is another 10- to 50-mA signal which is indicated on the auxiliary board by meters TI-202A1, B, and C, and on the main control board by TI-202A2. This signal also operates six switches – two in each channel. Three of these (TS-202A, B, and C) operate a common annunciator (TS-202A) on the main board.

Thermocouples on the coolant system freeze flanges are identical to those used on the fuel system flanges described in Sect. 3.1.3.2, and their signals are used in the same manner.

The radiator inlet and outlet salt temperature sensors are calibrated thermocouples installed in wells TW-201A1A and 2A for greater precision. Two of these thermocouples (TE-201A1A and 2A) are differentially connected to the input of emf/I converter TdM-201A, whose 10- to 50-mA dc signal is proportional to the difference between these temperatures. This signal is then used to operate an indicator (TdI-201A) on the main board and, in conjunction with the salt flow signal, to produce a heat power signal (see Sect. 3.3.4), which is logged, alarmed, and recorded in the main control room. Signals from four thermocouples (TE-201A1B, 1C, 2B, and 2C) are input to the data logger.

The remaining thermocouples in the coolant salt system are attached to the piping under each heater and at each support. Almost all of these temperatures are read out on the thermocouple scanner (see Sect. 6.7).

### 3.3.4 Flow

**3.3.4.1 Coolant salt.** An in-line flow venturi (FE-201A) is installed in line 201 at the radiator inlet for measurement of coolant salt flow. Two special NaK-filled seal-welded differential pressure transmitters (FT-201A and B) with a range of approximately 0 to 550 in. of water are connected across the outlet taps of the venturi (see Sects. 6.12 and 6.13).

These flow instruments in combination with the pump speed signals comprise three channels of coolant flow safety signals (see Sect. 2.8.6). The wiring for each channel is run in a separate conduit so that each channel is physically separated from the other two. In order to test the flow channels, provisions were made to obtain a low flow indication by remotely shunting a portion of the bridge circuit in the transmitter output. The resistor used in the shunting operation is adjustable so that the output can be smoothly varied throughout its entire range to check the functioning of all components in the channel operated by the transmitter. The 0- to 25-mV output from the differential pressure transmitters is converted to a 10- to 50-mA dc signal by converters FM-201A1 and B1, located in the safety panel in the auxiliary control room. In the A channel, the 10- to 50-mA signal is the input to switches FS201A and FSS201A and to square root converter FM201A1, which provides an output 10- to 50-mA signal proportional to the salt flow and serves as isolation between the safety portion of the circuit and the indication and alarm portions of the circuit. Switch FS-201A in conjunction with B channel switch FS-201A operates a common (low flow) annunciator on the main board. Switch FSS-201B provides a safety circuit interlock (see Sect. 2.8.6). The signal from the square root converter is indicated on the safety panel by FI-201A, recorded on the main board by FR-201A, and combined with the radiator $\Delta T$ measurements in XpM-201 (a multiplier) to provide a signal which is proportional to the heat power in the radiator. This signal is also converted to a 2- to 10-V signal which is input to the data logger. The output of XpM-201 is recorded on the main board by XpR-201A, converted to a 0- to 10-mV data logger signal by resistor XpM-201A2, and input to switch XpS-201A, which is located on the auxiliary board and which operates annunciator XpA-201A on the main control board.

The B channel is identical to the A channel up to the square root converter. The output of the B channel square root converter is logged and indicated in the same manner as the A channel but is not recorded or used for heat power computation.

**3.3.4.2 Coolant pump gas purge and letdown.** A weld-sealed matrix-type flow element FE-512A in line 512 (lower gas seal purge on the pump bearings) provides a pressure drop of approximately 0 to 40 in. of water which varies directly with helium flow in the range of 0 to 75 standard liters/hr. A weld-sealed differential pressure transmitter with 3- to 15-psi output connected across the taps of this matrix supplies a pneumatic signal proportional to the helium flow. The 3- to 15-psi pneumatic output signal from FT-512A is routed to the control room, where it is converted to a 0- to 10-mV signal for the data logger by resistor FM-512A and input to switch FS-512A and vertical scale pneumatic indicating controller FIC-512A. Switch FS-512A operates annunciator FA-512A on the main board. The output of controller FIC-512A is used to operate valve FCV-512A1 which, in turn, controls the flow of helium in line 512. A solenoid valve FCV-512A2 in the supply line to the throttling valve FCV-512A1 allows the helium flow to be shut off by the use of contacts in the control circuit in the event of low helium supply pressure (see Sect. 4.2.5). This system is similar to the fuel pump purge system shown in Figs. 3.1.0 or 3.1.4.0.

A weld-sealed matrix-type flow element FE-526C in line 526 (upper bearing gas seal leakage) provides a pressure drop of approximately 0 to 40 in. of water, which varies directly with the off-gas flow in the range

of 0 to 4.5 standard liters/hr. A weld-sealed electric differential pressure transmitter connected across the taps of this matrix supplies a 10- to 50-mA dc signal which is proportional to the off-gas flow in line 526. In the main control room, this 10- to 50-mA signal is indicated on FI-526C, converted to a 2- to 10-V signal for the data logger by resistor FM-526C2, and input to switch FS-526C, which operates low flow annunciator FA-526C on the main board. This system is similar to the fuel pump gas letdown system shown in Fig. 3.1.0.

### 3.3.5 Coolant Pump Motor Parameters

The coolant pump motor parameters measured are speed, current, voltage, power, and bearing noises.

The speed indicating system is a dual track system similar to the fuel pump speed system described in Sect. 3.1.6.7. Contacts SS-CP-G1 and 2 operate a common low-speed annunciator in the control room. Contacts SSS-CP-G1 and 2 are connected in parallel and in one channel of a two-out-of-three matrix in the load control safety circuitry (see Sect. 2.8.6). A low-level dc signal from the pulse counter is used to provide a speed signal to the logging system.

Current, voltage, and power measurements are made by use of current and potential transformers in the pump motor leads. The secondaries of these transformers are connected to an ammeter ($E_i$I-CP-D), a wattmeter ($E_w$I-CP-D), and a watt converter in the main control room and to a watt recorder ($E_w$R-CP-D) in the transmitter room. The signal from the converter is input to the data logger.

The microphone (XdBE-CP) used for noise pickup is a high-temperature ceramic microphone (see Sect. 6.17), which through selector switching is connected to a common audio amplifier in the auxiliary control room. There is no alarm or automatic action taken from the noise signal.

### 3.3.6 Beryllium Monitoring and Radiation

Since beryllium concentration in air provides a good indicator of a coolant salt leak and is hazardous to operating personnel, an automatic beryllium monitor ($A_{BE}$E-1010) is used to monitor the air in the radiator exhaust and in the coolant cell. The monitor consists of a Jarrell-Ash monochrometer, high-voltage spark and auxiliary spark for existing beryllium, a photomultiplier and associated amplifier, and a recorder ($A_{BE}$R-1010). A vacuum source is used to obtain continuous air flow from the coolant stack. The monitor and associated equipment are located in the high bay. Two timers on the monitor are used to control spark time in either an intermittent or continuous mode. The recorder provides a high-level alarm contact ($A_{BE}$S-1010) which operates an annunciator ($A_{BE}$A-1010) in the main control room. No automatic control action is taken from this parameter.

An ion chamber for sensing high levels of gamma activity was installed in the vicinity of the coolant pump bowl. The output of this chamber is indicated on an electrometer in the auxiliary control room. This signal is alarmed on high activity and logged on the data logger. No automatic control action is taken.

### 3.3.7 Coolant Radiator

Instrumentation was provided in the coolant radiator system for measurement and/or control of temperatures, air flows, radiator door and damper positioners, and of motor vibration and beryllium content in the radiator outlet air stream. This instrumentation is shown in Fig. 3.3.1.

**3.3.7.1 Temperature.** All temperature measurements except the inlet and outlet air temperatures are made with Inconel-sheathed mineral-insulated Chromel-Alumel thermocouples.

One hundred twenty thermocouples (TE-CR1 through CR-120) measure the temperature at the outlet of each of the radiator tubes (see Sect. 6.7). Signals from these thermocouples are input to the temperature scanner system (Sect. 6.14) which initiates an alarm if any tube outlet temperature drops below set point. During normal operations, low radiator tube outlet temperature is a indication of possible flow blockage and/or freezing of salt in the tube. Thermocouples TE-121 through 149 measure the temperature of structural members at 49 points within the radiator enclosure.

Eight thermocouples measure the temperature at four points on the annulus walls. Four of these (TE-AD3-4, 5A, 6, and 7A) are input to the data logger. Thermocouples TE-5B and 7B operate alarm switches TS-5B and 7B, which, in turn, operate a common annunciator TS-AD3-7B in the main control room.

Two resistance-type sensors measure the radiator inlet and outlet air temperatures. The inlet sensor (TE-AD1-1A) measures the temperature of ambient air before entrance to the radiator and annulus. The outlet sensor (TE-AD3-8A) is located near the top of the stack and measures the mixed mean of the radiator and annulus air temperatures. Resistance-to-current converters (TMAD1-1A1 and TM-AD3-8A1) convert the sensor resistance to a 10- to 50-mA signal which is converted to a 2- to 10-V signal for the data logger by resistors TM-AD1-1A2 and TM-AD3-8A2, and to a main

board indication by meters TI-AD1-1A and AD3-8A. These measurements together with the stack flow measurement discussed below provide a measure of heat removed from the radiator by the air stream.

Four thermocouples (TE-MB1-1, MB1-2, MB3-1, and MB3-2) measure the temperature of the main blower shaft bearings. Signals from these sensors are input to the data logger.

**3.3.7.2 Air flow.** The combined annulus and radiator air flow is measured by a pitot-venturi (FE-AD3A) positioned to read average flow under full-power conditions. The output from the pitot-venturi (about 10 in. of water at 4300-fpm velocity) is measured by a pneumatic differential pressure transmitter (FT-AD3A) located on the stack. The 3- to 15-psig output signal from the differential pressure transmitter is indicated in the main control room by FI-AD3A and converted to a 0- to 10-mV electric signal for the data logger by strain gage transducer FM-AD3A. There are no alarm or control functions associated with this measurement of coolant air flow.

In conjunction with the radiator inlet and outlet temperatures, this measurement provides a method of determining heat removed from the system by the radiator and, together with other heat balance measurements, provides another means of determining reactor power. However, the full potential of this type of measurement was not realized in the MSRE because the pitot-venturi installed is not capable of accurate measurement of flow in the 10-ft-diam stack under all flow conditions, and other factors such as air leakage through duct walls and the presence of heaters in the radiator contribute other inaccuracies in the heat balance.

Annulus air flow downstream of each auxiliary blower is monitored by vane-type flow switches FS-MB2-B1 and MB4-B1 which operate annunciators FA-MB2B and MB4B when annulus flow is low.

**3.3.7.3 Damper position.** Each of the blowers on the coolant radiator has associated with it a pneumatically operated "backflow preventer" which is automatically operated in conjunction with the blower start-stop switching (see Sect. 4.4). The position of the backflow damper is detected by position switches ZS-MB1-A1 and A2, MB2-A1 and A2, MB3-A1 and A2, and MB4-A1 and A2, indicated in the main control room by "open" "shut" indicator lights ZI-MB1-A1 and A2, MB2-A1 and A2, MB3-A1 and A2, and MB4-A1 and A2. Solenoid valves ECV-MB1A, MB2A, MB3A, and MB4A control pneumatic damper position operators ECO-MB1A, MB2A, MB3A, and MB4A in response to signals from the control circuits. Each damper opens when its associated fan motor is running and closes when the fan is stopped.

The position of the radiator bypass damper is controlled by a pneumatic operator (HCO-AD2) which is in turn controlled by controller $P_dC$-AD2A through booster relay $P_dM$-AD2A1. The controller obtains its signal from differential pressure transmitter $P_dT$-AD2A and positions the damper to maintain the pressure drop across the radiator at the controller set point which is determined by motor-driven pneumatic ramp generator $P_dX$-AD2A1. The ramp generator increases or decreases the set point signal at a predetermined rate in response to signals from the control circuit. The bypass damper may also be positioned manually by switching the controller to "manual." Switches $P_dSS$-AD2-A1, A2, and A4 provide interlock contacts for the radiation control circuitry (see Sect. 2.8, part IIA). Pressure gages $P_dI$-AD2-A1, A2, and A3 provide indications of radiator differential pressure demand (setpoint), differential pressure, and damper position in the main control room. Switches ZS-AD2-A1 and A2 detect the open and closed positions of the damper and operate control circuit interlocks, as well as indicator lamps ZI-AD2-A1 and A2 which are located on the console. Strain gage pressure transducer $P_dM$-AD2-A4 provides a signal to the data logger proportional to the radiator air differential pressure.

**3.3.7.4 Radiator door position.** The radiator doors are positioned by a single electric motor which drives a cable and drum-type operating mechanism for each door. The shafts between the motor and the two drums are equipped with magnetic brakes and magnetic clutches (see Sect. 2.8, part IIA). The doors may be positioned manually by switches on the console or automatically by control circuitry. Deenergizing the clutch initiates a rapid door closure (see Sects. 2.8 and 4.4).

Synchro transmitters (ZT-ID-A and OD-A) on each door detect door position and operate receiver-indicators ZI-ID-A and OD-A which are located on the console and give a continuous display of radiator door position. Each position-detecting system transmits two signals to the data logger; one comes directly from the synchro transmitter and the other is generated by a synchro-driven potentiometer. Power supply ZX-OD-ID supplies voltage to the potentiometers. Intermediate limit switches ZS-ID-A1 and A2 and ZS-OD-A1 and A2 are mechanically coupled to the synchro transmitters. The switch contacts are used as interlocks for the radiator control circuits and indirectly to operate indicating lamps ZI-ID-A2 and A3 and ZI-OD-A2 and A3 which are located on the console. Upper and lower

limit switches ZS-1D and OD-B1 and B2, C1 and C2, D1 and D2, B3B and B4B are also used as control circuit interlocks and indirectly to operate indicating lamps on the console and main board.

**3.3.7.5 Vibration.** Vibration pickups MB1 and MB2-B1, B2, B3, and B4 installed on each of the blower shaft and motor bearings give information on the dynamic balance of the blowers. The output from the vibration pickups is manually selectable for readout on a single indicator for each main blower in the water room. There is no automatic alarm or control function associated with this measurement.

**3.3.7.6 Beryllium monitoring.** The stack beryllium monitor $A_{BE}$-1010 is discussed in Sect. 3.3.6.

## 3.4 COOLANT SALT FILL AND DRAIN SYSTEM

The process instrumentation for the coolant salt fill and drain system is shown in Fig. 3.3.0. This system consists of the coolant drain tank, the salt charging system, and piping connection of the drain tank to the circulation system. All components except the salt charging system, which is a temporary system used for both the fuel and coolant system, are located in the coolant drain tank cell, which is completely accessible when the reactor is subcritical for any maintenance or repair.

The process variables monitored in the coolant drain and fill system are:

1. pressure,
2. level,
3. weight,
4. temperature.

### 3.4.1 Pressure

The pressure measuring and controlling elements associated with the salt charging system consist of standard non-bleed pressure regulators and pressure gages. Helium is utilized to pressurize small salt cans which have been heated in a furnace to above liquidus temperature, forcing the salt to flow into the coolant drain tank through line 203. At the conclusion of the filling operation, line 203 is blanked off and the salt charging apparatus removed from the system.

The pressure control scheme for the coolant drain tank is similar to that used in the fuel drain tank system described in Sect. 3.2.1. The coolant drain tank helium cover gas pressure is used to push the salt from the drain tank to the pump bowl and hold its level while the freeze valves are being frozen. This pressure is controlled by weld-sealed throttling valve PCV-511C which is, in turn, controlled by controller PIC-511C in response to a signal from weld-sealed pressure transmitter PT-511C. This pressure signal is converted to a 2- to 10-V signal for the data logger by resistor PM-511C2 and indicated in the main control room on PIC-511C. No restrictions of fill rate are required in this system since the consequences of rapid fill or an overfill are minimal. However, the fill rate may be limited by setting the position of weld-sealed throttling valve HCV-511B. This is accomplished by manually adjusting pressure regulator HIC-511B, which is located on the main control board. A pneumatically operated weld-sealed valve (HCV-511A1), located downstream from the pressure control valve, blocks the helium supply in the event of high pump bowl level, high drain tank pressure, emergency drain request, or low helium supply pressure. These actions are initiated by the control circuit via solenoid valve HCV-511A2.

The pressure in the drain tank is detected by a weld-sealed differential pressure transmitter (PT-511D) whose 10- to 50-mA electric signal is converted to a 2- to 10-V data logger signal by resistor PM-511D2, and to a 3- to 15-psig pneumatic signal by current-to-air converter PM-511D3. The pneumatic signal operates a recorder (PR-511D) and three switches on the main board. Switches PS-511D1 and D2 operate a common (high-low) annunciator on the main board. Switch PSS-511D1 provides an interlock for the control circuit (see Sect. 4.2.4).

Venting the drain tank to the off-gas system and equalizing the drain tank and coolant pump bowl pressures are accomplished by opening weld-sealed pneumatically operated valves HCV-527-A1, 536-A1, and 547A1 in the drain tank cell. Each of these valves has position switches attached which operate lamps in the main control room. These valves are controlled by solenoid valves which are controlled by the control circuits (see Sect. 4.2.4).

### 3.4.2 Salt Inventory

The inventory of salt in the coolant drain tank is sensed by two independent methods – level and weight. Except for the application numbers assigned, these systems are the same as the fuel drain tank level and weight systems described in Sect. 3.2.2. However, containment block valves were not required on pneumatic lines associated with the coolant drain tank weight system.

### 3.4.3 Temperature

Temperatures are measured in the coolant fill and drain system on salt lines, on freeze valves, and on the drain tank.

Salt line temperatures in the coolant fill and drain system are measured in the same manner as on other salt lines in the coolant salt system (see Sect. 3.3.3).

The measurement of temperatures on and the control of freeze valves FV-204 and 206 are similar to those of freeze valve FV-206, described in Sect. 3.1.3. Except for the application number assigned and the source of cooling air, the component used and the method of operation are the same. The air used to cool FV-204 and 206 is supplied by a small Roots blower (component cooling pump no. 3) or alternately from the service air compressor.

The coolant drain tank temperatures are measured by 13 thermocouples at nine locations on the tank. All thermocouples are $\frac{1}{8}$-in.-OD Inconel-sheathed, magnesium oxide-filled Chromel-Alumel thermocouples which are Heliarc welded to the vessel (see Sect. 6.7).

All thermocouples are terminated in single Thermo Electric thermocouple disconnects. From this disconnect, individual runs of thermocouple extension wire are used going to a junction box in the drain tank cell. From the junction box, all thermocouples are routed to the thermocouple patch panel and then to the temperature scanner system, where out-of-limit temperatures are scanned, indicated, and alarmed. There is no automatic control action taken from any of these temperature signals.

## 3.5 HELIUM COVER GAS SYSTEM

The cover gas system is shown in Fig. 3.5.0. The system consists of the helium supply trailer and its backup cylinder bank, a molecular sieve-type dryer for moisture removal, a preheater, a titanium sponge-type oxygen removal unit, an oxygen content detection system, a receiver tank, and the helium distribution system. Duplicate dryer, preheater, and oxygen removal systems are provided so that one system can be rejuvenated (using a low back purge of clean dry helium) while the other is in service.

The parameters measured in this system are:

1. pressure,
2. flow,
3. temperature,
4. oxygen content,
5. radioactivity,
6. leak detection.

Except for a weld-sealed pressure transmitter on the treated helium storage tanks, a weld-sealed differential pressure-type flow transmitter, a weld-sealed flow control valve, and some specially fabricated thermocouples, instrumentation components used in this system are standard commercially available types. However, to minimize helium outleakage and oxygen inleakage, a special effort was made to select components which were inherently leak-tight or could be made so before installation. For example, standard regulators with neoprene diaphragms were used, but selected regulators were tested for oxygen inleakage, and all regulators were checked under pressure for helium leakage.

### 3.5.1 Pressure

Pressure of helium from the supply trailer and/or bottles is reduced from an initial pressure of 2500 psig to approximately 250 psig by regulator PCV-500G before entrance to the dryer. Regulator inlet and outlet pressures are locally indicated on gages PI-500G1 and G2, which are integrally mounted on the regulator. Gages PI-502A and B provide local indication of pressure at the cylinder banks.

The pressure of treated helium in the storage tank is measured by weld-sealed electric pressure transmitter PT-500 (see Sect. 6.2), which has a 0 to 300 psig range. The 10- to 50-mA signal from this transmitter operates meter-type indicator PI-500A in the control room and is converted to a 2- to 10-V data logger signal by resistor PM-500A2. Pressure in the storage tank is also indicated locally on pressure gage PI-HeA.

Regulator PCV-500C or PCV-605A further reduces the helium pressure to 40 psig before entrance to the low-pressure headers which supply various systems. These regulators are redundant, and, by appropriate valving, either may be used as the operating regulator or removed for maintenance. Pressure gage PI-500M provides a local indication of pressure downstream from these regulators.

To avoid overloading the dryers and oxygen removal units, helium for operations, such as fuel processing plant sparging, where usage is high and helium quality requirements are not stringent, is supplied from line 530, which is connected ahead of the dryers. Reduced pressure for these operations is supplied by regulator PCV-530B. Gages PI-530B1 and B2 provide local inductions of pressures at the inlet and outlet of this regulator.

Regulators PCV-548A and PCV-549A supply helium at reduced pressure to the moisture and oxygen analyzers from taps upstream and downstream of the treatment systems.

All pressure switches in the cover gas system actuate Rochester alarm units (see Sect. 4.12) in the auxiliary control room, which, in turn, actuate a common annunciator in the main control room.

Switch PS-500E initiates an alarm when the supply helium pressure drops below set point. Switches PS-500B1 and B2 monitor the pressure at the dryer inlet and initiate an alarm if this pressure is too high or too low. Switch PS-500K initiates an alarm when the pressure in the storage tank is low.

Pressure switches PS-506 and PS-507 initiate alarms when the pressure in lines 506 and 507 is near the burst rating of the rupture disks in these lines.

Switches PS-500L1 and L2 initiate an alarm if the pressure in the low-pressure supply header deviates significantly from 40 psig.

Pressure switch PS-508A5, located downstream from the rupture disk in line 508, initiates an alarm if the rupture disk fails. Under normal conditions pressure downstream from the rupture disk is vented to the stack through an excess flow valve connected across a relief valve. If the disk ruptures, the excess flow valve closes, and the pressure is maintained near 40 psig by a relief valve which also prevents a total loss of helium. This arrangement was used because the probability of spurious failures of the 50-psig-rated disk was considered to be high, the leakage through a relief valve used alone was excessive, and because maintenance of pressure in the helium supply system is necessary for continued operation of the reactor.

Three safety switches (PSS-500N1, N2, and N3) monitor the pressure in the 40-psig helium header. These switches provide interlocks for safety circuits which close containment block valves in helium supply lines if the helium supply pressure is low (see Sect. 4.8.1). Provisions were made to test the operation of these switches without actuating closure of the block valves. This was done by connecting the switch contacts in a two-out-of-three matrix and by placing a flow restrictor (PxM-500N1, N2, and N3) upstream of each switch and pressure gages and valving downstream. To test the switch, the valves in the associated line are opened, and the resultant flow causes a pressure drop across the restrictor which reduces the pressure at the switch. By throttling the valves, the pressure at which the switch actuates can be determined in the associated pressure indicator (PI-500N1, N2, or N3).

### 3.5.2 Flow

A pneumatic throttling valve (FCV-500J), located upstream of the helium storage tank, is used to limit the flow of helium through the dryers and oxygen removal units and thus ensure adequate removal of moisture and oxygen from the helium. The position of this valve is controlled by a pneumatic indicator-controller (FIC-500J) in response to a flow signal obtained from a matrix-type flow element (FE-500J) located just upstream of the valve in line 500. Both the valve and the flow element are weld-sealed (see Sects. 6.5 and 6.19).

The flow element provides a pressure drop of approximately 0 to 49 in. $H_2O$ which varies directly with helium flow, in the range of 0 to 10 standard liters/min. A seal-welded pneumatic differential pressure transmitter (FT-500J) connected to the taps of the flow element produces a 3- to 15-psig pneumatic signal which varies linearly with the helium flow. This signal is transmitted to a pressure switch (FS-500J) and to the indicator-controller which is located in the diesel house. The pressure switch operates a Rochester alarm unit in the auxiliary room, on high flow, which, in turn, actuates the common helium system annunciator in the control room. The set point of FIC-500J is set so that valve FCV-500J remains full open during normal helium usage and closes to the control position when helium demand is high. During high usage periods, such as filling operations, the helium demand is supplied from the storage tank. This causes a drop in storage tank pressure which is restored when demand is low.

### 3.5.3 Temperature

Temperatures in the cover gas system are measured with $\frac{1}{8}$-in. stainless steel sheathed, magnesium oxide-filled Chromel-Alumel thermocouples Heliarc welded to the vessels and piping. These thermocouples are terminated in single thermocouple quick disconnects. With few exceptions all of these thermocouples are located on the dryers, preheaters, and oxygen removal units and connect to instrumentation located on cover gas panels 1 and 2 in the diesel house. The fabrication of these thermocouples and the method of installation and attachment are discussed further in Sect. 6.7. Individual runs of polyvinyl-insulated thermocouple extension wire are used between the thermocouple disconnects and the panels. Two thermocouples are located on each of the dryers and preheaters and six on each oxygen removal bed. In each case, one thermocouple is input to an indicator-controller for on-off control of the heater associated with that particular vessel, and the other

thermocouple is input to a second indicator-controller which functions as a high-temperature safety cutout for the heater and operates a common high-temperature annunciator in the main control room. For example, thermocouple TE-DR1-1 on dryer no. 1 is input to indicator-controller TIC-DR1-1, which controls the heater, and thermocouple TE-DR1-2 is input to indicator-controller TS-D21-2, which has two contacts – one of which is used as a high-temperature interlock in the heater control circuits and the other to actuate the common annunciator (TA-DR2-2). The indicator-controllers are a direct-actuated galvanometer type manufactured by Wheelco. Except for the application numbers assigned and the extra thermocouples on the oxygen removal units, the instrumentation and control of Dryer No. 2 and of the preheaters and oxygen removal units are identical. Four of the extra thermocouples on the oxygen removal units (TE-ORL-1B and 2B and TE-OR2-1B and 2B) are installed spares. Thermocouples TE-OR1-3 and OR2-3 measure gas inlet temperature and are installed in wells. Thermocouples TE-OR1-4 and TE-OR2-4 measure gas discharge temperature and are inserted through a gland into the gas space. All temperatures in this system are read out on the cover gas panels. For further discussion of the heater control circuits see Sect. 4.9.6.

Three thermocouples (TE's 500-1 and 2 and 503-1) are located on the piping, one ahead of each dryer and one after the helium flow regulating valve in line 500. These temperatures are read out on a direct-actuated meter indicator (TI-500-1). A manual thermocouple selector switch (HS-500-1) is used to select the thermocouple for readout. The indicator and switch are located on cover gas panel no. 2.

One thermocouple (TE-516-1) monitors the temperature of the gas purge to the fuel circulating pump. This thermocouple is attached to the outside of line 516 and is read out on a precision indicator in the control room.

### 3.5.4 Oxygen and Moisture Content

Standard commercial water and oxygen analyzers are used to determine the moisture and oxygen content of the helium gas either before or after the treatment to remove these contaminants. A recorder, locally mounted in the output of the oxygen monitor, continuously records this information. There are no alarm or automatic control actions taken on either of these variables.

### 3.5.5 Radioactivity

A Geiger-Mueller tube (RE-500D) monitors the activity of gas in line 500 at a point in the water room near the first takeoff of the low-pressure lines which supply the various reactor systems. The purpose of this monitor is to detect back diffusion of radioactive gases from the reactor system. This detector provides a signal to a three-decade readout device (RM-500D) which is located in the auxiliary control room and contains an integral indicator (RI-500D) and a switch (RS-500D). The switch operates a high radiation annunciator (RA-500D) in the main control room. The readout device, which also supplies a millivolt level signal to the data logger, is an ORNL model Q-1916, described in Sect. 2.10, Part IIA of this report. There is no automatic action taken from this variable.

### 3.5.6 Leak Detection

The leak detection system is shown in Fig. 3.5.1. All leak detectable connections in the system are brought in to one of the eight leak detector headers. Since each joint or joint system is valved in individually, trouble shooting can be made easy by first isolating banks, then individual lines.

## 3.6 OFF-GAS, CONTAINMENT PRESSURE, AND COMPONENT COOLANT SYSTEMS

The systems covered in this section are shown in Fig. 3.6.0. They consist of the containment pressure and component coolant systems, the main and auxiliary charcoal beds, and the off-gas trouble-shooting system.

### 3.6.1 Component Coolant System

The component coolant system is used for recirculating the air in the reactor and drain tank cells. The system, which forms a closed circuit, consists of component coolant pumps, an air cooler, piping, and a cross-connect valving system. The pumps and their associated oil circulating system are located in enclosures in the special equipment room. Two pumps are provided because continuous flow of component cooling air is required to maintain freeze valves in their closed condition and is, therefore, a service which is vital to reactor operation. Since the component coolant air lines penetrate the reactor cell walls and are open ended inside the reactor cell, the component cooling

system is, in itself, part of secondary containment and is subject to the same rules governing pressure ratings and permissible leakage. For this reason, all instrumentation components of this system containing component cooling air have a pressure rating of at least 50 psig and were made essentially leak-tight at this pressure. Weld-sealed construction was not required to meet the leakage requirements; however, close attention to all possible leakage paths through connections, gaskets, etc., was required to keep the total overall leakage within acceptable limits.

The component cooling pumps are basically positive displacement devices, and the pressure rise across the pumps is determined mainly by the flow demand imposed by the load. Since this load is determined by requirements for cooling air on freeze valves, which vary widely, and since a constant supply pressure was required for proper operation of the various cooling air control valves, the cooling air supply pressure is controlled by means of a pneumatically actuated throttling-type control valve ($P_d$CV-960A) which loads the pumps by venting air to the reactor cell. This valve is located inside the reactor cell and is sized to pass the full output of the pump without excessive pressure rise. The pressure rise across the component coolant pump (minus the drop across the air cooler) controls the position of this valve and is measured by an electric differential pressure transmitter (PdT-960A) located in the special equipment room. The transmitter amplifier (PdM-960A1) is remotely located in the transmitter room. The 10- to 50-mA output from the transmitter amplifier is converted to a 2- to 10-V signal for the data logger by resistor PdM-960A2 and to a 3- to 15-psig pneumatic signal by current-to-air converter Pdm-960A3. The pneumatic signal is then transmitted to the main control room where it is input to a vertical-scale pneumatic indicator-controller (PdIC-960A) and two pressure switches. Switch PdS-960A1 operates a high differential pressure annunciator (Pa-960A) in the main control room. Switch PdS-960A2 operates solenoid valve PdCV-960A2 via the control circuits and shuts off supply air to the controller. This arrangement eliminates startup pressure overshoots resulting from the reset-windup characteristics of the controller. (For further information on the component cooling pump control circuit, see Sect. 4.9.4.) Booster relay PdM-960A4 amplifies the 3- to 15-psig output of the controller to the 6- to 30-psig pressure required for operation of PCV-960A. Pneumatically operated containment block valves (HSV-960A1 and A2), located in the supply and vent lines to this valve, provide means for blocking these lines in the event of high cell pressure. A restrictor (FE-960A), connected between the vent and supply lines, allows the valve to fail to its open position in the event of cell blockage.

Pressure switches PS-791A and PS-795A in the oil supply lines to each of the component coolant pumps provide contacts which are used in the control circuitry to stop the pump on loss of oil pressure (see Sect. 4.9.4). Switches PS-791B and PS-795B operate a common annunciator (PA-791B) in the main control room when the oil supply pressure on either pump is low.

A pressure switch (PS-917A1) referenced to the pressure inside the pump enclosure operates an annunciator (PA-917A) in the auxiliary room when the cooling air supply pressure is low.

The air temperatures at the pump inlet and outlet and at the cooler outlet are measured by thermocouples TE-922-1, 916, and 917, which are installed in wells. The signals from these termocouples are input to the data logger.

### 3.6.2 Containment Pressure Control

In order to maintain the containment cells at a slight negative pressure (~2 psig negative), a small amount of the air at the discharge from the air cooler (before the pressure control valve) is vented to the containment stack through line 569. A manually controlled continuous flow is maintained through this line to take care of any inleakage to the cell. The gas stream flows past radiation detectors RE-565B and C. Signals from these detectors are input to ORNL Q-1916 radiation monitors RM-565B and C (see Sect. 2.10). These monitors are located in the auxiliary control room and provide indication of radiation level on integrally mounted meters RI-565B and C, millivolt level signals for the data logger, and high-level switch contacts RS-565B2 and C2 and RSS-565B1 and C1, which are used to operate annunciator RA-565B in the main control room and as safety circuit interlocks (see Sect. 4.7.2). One of the actions taken by the safety circuits when these switches operate is closure of valve HCV-565A1, which blocks the flow of air from the reactor cell to the stack. This valve is a pneumatically operated fail-closed type with open-shut trim. Its position is controlled by solenoid valve HCV-562A2 and detected by position switch ZS-565A1, which operates position indicators ZI-565A1 and A2 on the main control board.

The flow of air through line 565 to the stack is measured by a rotameter (FI-569B) and by a differential pressure transmitter (FT-569A) connected across a capillary flow element (FE-569A) located in line 569.

The pneumatic output of the transmitter is indicated locally in the vent house on pressure gage FI-569A and is converted to a millivolt level signal for the data logger by strain gage pressure transducer FM-569A.

The pressure inside the reactor containment enclosure is measured by a 0- to 65-psia absolute pressure transmitter (PT-RCA). The transmitter amplifier (PM-RCA1) is remotely located in the transmitter room. The 10- to 50-mA signal from this transmitter is used to operate an indicator (PI-RCA) in the main control room and switches PS-RCA1 and A2 in the auxiliary control room. It is also converted to a 2- to 10-V signal for the data logger by resistor PM-RCA-2. The switch actions are used by the control circuit to stop cell evacuation and to operate an annunciator (PA-RCA) in the main control room when cell air pressure is too low.

In order to detect cell leakage, a precision measurement of changes in cell pressure was required. To achieve this, a number of cell reference volumes were installed in the reactor and drain tank cell. These cell reference volumes are 20-ft sections of 5-in. piping interconnected and sealed so as to present a reflection of the past pressure and provide a reasonable amount of temperature compensation. A direct measurement of the difference in the pressure of the reference volume and the containment cell is made with hook gage PdI-RC-E, which can easily measure pressure differences in the order of 0.0005 in. $H_2O$ and provides a relatively simple yet accurate measurement of changes in cell pressure. Containment block valves HSV-RC-E1 and E2 isolate this device from the reactor cell on command from the containment safety circuits. Pressure gage PI-RCE-1 provides a local indication of cell pressure. There are no alarms or control functions associated with this measurement.

A second method of measurement of cell leakage is the use of oxygen analysis of the cell gas. Since the system is purged with nitrogen only, any change in oxygen content is from inleakage of air. An oxygen analyzer (A-$O_2$A-566A) is installed to sample the recirculating gas in line 566. Block valves HCV-Al, A2, A3, and A4, located before and after the analyzer, close on high cell activity or pressure. There are no alarm or control functions associated with this measurement. For further discussion of this system see Sect. 6.4.

Six pressure switches (PSS-RC-B, G, F, H, J, and K) provide reactor cell pressure information to the safety circuits. The switches provide three channels of information. Each channel consists of a high and a low pressure switch. Means were provided to check the operation in each channel separately (see Sects. 1.5 and 4.8.3). There are no alarm or control functions associated with this measurement.

### 3.6.3 Main and Auxiliary Charcoal Beds

The portion of the off-gas system that is shown in Fig. 3.6.0 consists of four main charcoal beds, two auxiliary charcoal beds, particle traps, and the piping interconnecting these components. The parameters monitored in this system are:

1. pressure,
2. level,
3. temperature,
4. radioactivity.

**3.6.3.1 Pressure.** The pressure drop across the main charcoal beds is measured by a weld-sealed differential pressure transmitter (PdT-556A). The amplifier for this transmitter (PdM-556A1), which is remotely located in the transmitter room, transmits a 10- to 50-mA signal to the auxiliary control room where it operates recorder PdR-556A and is converted to a 2- to 10-V signal for the data logger. There are no alarm or control functions associated with this measurement.

A pneumatic pressure transmitter, PT-564A, monitors the pressure downstream from the main charcoal beds. The 3- to 15-psig output from the transmitter operates recorder PR-564A in the main control room. This pressure, together with the pressure drop across the charcoal beds and the pump bowl pressure, yields a pressure balance of the off-gas system and allows the pressure drop across the particle trap to be inferred.

**3.6.3.2 Level.** The level of cooling water in the pit enclosing the main charcoal beds is measured by means of a dip-tube-type bubbler and a direct-readout gage (LI-CBC-A) located in the vent house. The water level is normally maintained at the overflowing condition, but when partial plugging of the beds occurs, the water level is lowered and heat is applied to the bed. This in conjunction with external heat and gas overpressure serves to clear up any restriction.

**3.6.3.3 Temperature.** Thermocouples installed in wells at three locations on each of the main charcoal beds and at one position on the auxiliary charcoal bed are used as inputs to the data logger (see Sect. 6.7). These thermocouples provide some information on the rate of progress of fission product migration through the beds.

Thermocouples on the particle trap in line 522 and on the auxiliary charcoal beds are also input to the data logger.

**3.6.3.4 Radioactivity.** Two G-M-type radiation detectors (RE-528C and E), located on line 528, monitor the amount of activity released from the coolant off-gas streams. A second pair of detectors (RE-557A and B),

located on line 557, monitor all gas leaving either of the charcoal beds. Signals from these detectors are input to four ORNL Q-1916 radiation monitors (RM-528B and C and RM-557A and B; see Sect. 2.10). These monitors are located in the auxiliary room and provide an indication of radiation level on integrally mounted meters RI-528B and C and RI-557B and C, millivolt level signals for the data logger, and high level switch contacts for alarm and control circuits. Switch contacts RS-528B1 and C1 and RS-557A2 and B2 operate annunciators RA-528 and RA-557B in the main control room. Contacts RSS-528B1 and C1 and RSS-557A1 and B1 are used as safety circuit interlocks. Since activity in the coolant salt system may indicate a rupture in the fuel-coolant heat exchanger, the signal from the detectors on line 528 is used by the control circuits to initiate an emergency fuel drain and to stop the fuel circulating pump. High activity indicated by detectors on line 557 is used in the control circuits to block the off-gas system by closing the off-gas vent valve HCV-557C1 and to vent the oil storage tanks in the fuel and coolant oil systems (see Sect. 4.8.2). Valve HCV-557C1 is the same type as HCV-56A2 discussed in Sect. 3.6.2 and is similarly instrumented.

### 3.6.4 Off-Gas Trouble-Shooting System

Helium cylinders with pressure regulation and high- and low-range flow indicators are used for pressure testing, purging, and forward and back flows of the off-gas system. This system is used both to detect and clear areas of restrictions which occur. Pressures are measured with locally mounted pressure gages PI-557D, E, G, and F and PI-562A, and flows are measured with in-line rotameters FI-557 D and E. Two-stage pressure reduction and rupture disk protection were used to prevent possible overpressurizing of portions of the reactor system. Regulators PCV-567A and 563A reduce the bottle pressure below the 50 psig rating of the rupture disks, and regulators PCV-567A and PCV-563B further reduce the pressure to the required operating level. Pressure switches PS-567C and PS-563C operate annunciators in the control room if the pressure at the rupture disks is near their burst rating.

## 3.7 LUBE OIL SYSTEMS

The lube oil systems for the fuel and coolant pump motor bearings are shown in Figs. 3.7.0 and 3.7.1. Each system consists of an oil supply tank, two circulating pumps, a pressure control system, and the piping associated with the system outside the secondary containment. The following section discusses instrumentation associated with the fuel salt pump oil system. Except for the application numbers assigned, the instrumentation of the coolant salt pump oil system is identical. Each system is an integral "package" unit contained in an enclosure and located in the service tunnel. All primary sensors, except the flow and temperature sensors on the cooling water lines, are located on the package inside the enclosure. Control and block valves are located outside the enclosure. Most of the other instrumentation associated with these systems is located on nearby panels just outside of the service tunnel. The parameters measured are:

1. pressure,
2. flow,
3. level,
4. temperature,
5. motor parameters,
6. radioactivity.

### 3.7.1 Pressure

The pressure in the oil system is maintained by helium cover gas pressure in the oil supply tank gas space. This pressure, which is maintained at 1 to 2 psig in excess of the respective pump bowl pressures, is sensed by weld-sealed electric pressure transmitter PT-513A. The amplifier associated with this transmitter (PM-513A1) is remotely located on the oil panel. The 10- to 50-mA signal from the transmitter is converted to a 2- to 10-V signal for the data logger by resistor PM-513A3 and to a 3- to 15-psig pneumatic signal by current-to-air converter PM-513A2. The pneumatic signal is used as input to an indicator (PI-513A) at the oil package and to an indicator-controller (PIC-513A) in the main control room. The output from the controller supplies two throttling valves, PCV-513A1 in the gas supply line and PCV-513A2 in the vent line. These valves utilize split range operators so that, as the control signal to them varies through the range of 3 to 9 psig, the vent valve progresses from fully open to fully closed. The supply valve starts to open at 9 psig and progresses to fully open at 15 psig. In this manner a single signal controls both the supply and venting action, and both valves are never open at the same time. Solenoid valves PCV-513A3 and A4 close these valves and block the supply and vent lines on demand from the containment safety circuits. Valves PCV-513A1 and A2 are weld-sealed but have standard operators.

Pressure switches PS-513A1 and A2 directly monitor the gas overpressure in the oil supply tanks and initiate an alarm in the main control room on annunciator PA-513A when the gas pressure is high or low.

Oil pressure at the discharge of pumps FOP-1 and FOP-2 is indicated locally on gages PI-701A and PI-702A.

Pressure on each side of the oil filter is indicated on gages PI-702C and PI-703C. Information from these gages is useful in determining pressure drop across the filters, which is indicative of clogging.

Four pressure switches monitor the discharge pressure of the pumps. Two of these (PS-701B1 and PS-702B1) are connected in parallel and initiate an alarm in the main control room on annunciator PA-701B if neither pump is developing adequate pressure. The other two (PS-701B2 and PS-702B2) provide low oil pressure interlocks to control circuits which automatically start the standby pump (see Sect. 4.9.3).

### 3.7.2 Flow

Lubricating oil flow to the fuel salt pump bearings is sensed by venturi flow element FE-703A, which develops a differential pressure proportional to the square of the flow rate. This differential pressure is measured by a weld-sealed differential pressure transmitter (FT-703A). The amplifier associated with the transmitter (FM-703A1) is remotely located on the oil panel. The 10- to 50-mA signal from this amplifier operates an indicator on the main board (FI-703A1), an indicator on the oil panel (FI-703A2), and two flow switches (FS-703A and FSS-703A), and is converted to a 2- to 10-V signal for the data logger by resistor FM-703A2. Switch FS-703A operates a low flow annunciator (FA-703A) in the main control room. Switch FSS-703A provides an interlock for the control circuits which is used to stop the fuel salt pump when lube oil flow is low (see Sect. 4.2.2).

Block valve FSV-703B1 closes the lubricating oil supply line to the fuel salt pump when the level in the oil supply tank is low (see Sect. 4.9.3). This valve is pneumatically operated via solenoid valve FSV-703B2 and is equipped with a position switch (ZS-703B1) which operates position-indicating lamps ZI-703B1 and B2 on the main control board.

Cooling oil flow to the fuel salt pump thermal shield is sensed by venturi flow element FE-704A. Instrumentation associated with this measurement is identical to that discussed above for the lubricating oil flow.

The flow of cooling water to the cooling coils on the oil supply tank is monitored by rotameter FI-821A. An integral switch on the rotameter initiates a low cooling water flow alarm in the auxiliary room on annunciator FA-821A.

### 3.7.3 Level

The oil level in the supply tank is measured by float-type transmitter LT-OT1-A. The 3- to 15-psig pneumatic output of this transmitter operates a switch and three indicators and is converted to a millivolt level signal for the data logger by strain gage transducer LM-OT1-A. One indicator (LI-OT1-A2) is a locally mounted gage. Another (LI-OT1-A1) is located on the main control board. The third indicator (LT-OT1-A3) is located on the oil panel and is equipped with two switches. One of these switches (LS-OT1-A3) initiates an alarm in the main control room on annunciator LA-OT1-A3 when the oil level is low. The other switch (LSS-OT1-A3) supplies a control circuit interlock which closes valve FSV-703B1 and stops oil flow to the pump bearings when the oil level is low. A third switch (LS-OT1-A2) is directly actuated by the pneumatic signal. This switch operates an indicator lamp (LA-OT1-A2) on the main control board.

### 3.7.4 Temperature

The temperature of the oil pump motor windings is measured with fiber-glass-insulated Chrome-Alumel thermocouples TE-FOP-1 and 2, which are embedded in the motor windings. These thermocouples operate indicators TI-FOP-1 and 2, which are equipped with integral switches (TS-FOP-1 and 2) that initiate an alarm in the control room on annunciator TA-FOP-1 when the temperature of either motor winding is high.

The outlet temperature is measured with stainless steel sheathed, magnesium oxide-insulated Chromel-Alumel thermocouples (TE-702-1A and B). The signal from thermocouple TE-702-1B is input to the data logger. Thermocouple TE-702-1A is an installed spare.

The temperature of the cooling water at the inlet and outlet of the oil supply tank cooling coils is measured with and indicated locally on bimetallic dial indicators TI-820-1 and TI-821-1, installed in wells TW-820-1 and TW-821-1.

### 3.7.5 Motor Parameters

The current drawn by each of the motors is monitored on an ammeter ($E_iI$-FOP) located on the oil panel. A manual selector switch (HS-FOP) permits the use of a single ammeter to monitor the current of either pump. Current transformers $E_iE$-FOP-1 and 2 provide

isolation between the panel-mounted ammeters and the motor supply voltage and step down the motor current to within the standard 5 A full scale current required by the meters.

### 3.7.6 Radiation

A G-M tube mounted on the side of the oil supply tank is used in conjunction with an ORNL model Q-1916 radiation monitor (OT1-B) to indicate and alarm the radiation level of the oil system (see Sect. 2.10, Part IIA). A millivolt level signal from this monitor is input to the data logger.

## 3.8 COOLING WATER SYSTEM

The complete instrument application drawing for this system is shown in Fig. 3.8.0. The water system is composed of three subsystems – the process water system, the condensate water system, and the treated water system. These subsystems are shown in a simplified form in Figs. 3.8.1, 3.8.2, and 3.8.3. Instrument components used in these systems are conventional, commercially available items, and the only special requirements associated with these components were the tight shutoff requirements for containment block valves and the low leakage requirements for all components of the treated water system, especially those located within containment. The latter requirement was met, primarily, by close supervision of installation, by inspection, and by testing. Threaded fittings and gasketed joints were adequate for this service; however, welded joints and construction were used, in some cases, for reason of convenience or economy.

Most alarm switches in the water system actuate a common annunciator in the main control room via Rochester alarm units located in the auxiliary control room (see Sect. 4.12).

Since much of the instrumentation in these systems is repetitious, the following discussion will not describe each application separately. Instead, repetitive applications will be discussed as a group. Also, since the structure of individual instrument systems is conventional and, in most cases, self-explanatory, reference to instrument application numbers will be made only where needed for clarity. In these cases the reader should refer to the complete application drawing (Fig. 3.8.0) as well as the simplified schematics of the subsystems.

### 3.8.1 Process Water System

The process water system, shown in Fig. 3.8.1, consists of a supply (from ORNL), a cooling tower, two circulating pumps, and the components supplied. Make-up water for the system is added to the cooling tower sump, whose level is controlled by a ball-float-type level control valve. The temperature of the system is controlled by manually selecting one or both of the cooling tower fans to be in operation and by a bypass valve (TCV-858) which is pneumatically controlled from the temperature at the discharge of the circulating pump. In reality the elevation of the process cooling water return line (856) is well below the top of the cooling tower, so the pressure drop across valve TCV-858 determines the flow rate to the cooling tower. The temperature sensor in this application is a gas bulb connected directly to the transmitter (TT-858). Vapor pressure of liquid in this bulb positions a Bourdon tube in the transmitter. This position is converted to a 3- to 15-psig pneumatic signal which operates indicator-controller TIC-858, which, in turn, operates the control valve.

All flows in the process water system except that to the treated water cooler are measured and indicated locally by rotameters. Rotameters on the drain tank condensers are equipped with switches which operate the common water system annunciator in the main control room.

The flow to the treated water cooler was too large to measure with a rotameter and was measured with an orifice and differential pressure transmitter (FE and FT-851C). The 3- to 15-psig signal from the transmitter is indicated on a locally mounted receiver gage (FI-851C) and used to operate a switch (FS-851-C) which operates the common annunciator in the main control room via Rochester alarm unit FA-851C.

Water temperatures at the outlet of the treated water cooler and at the inlets to the pumps and the coolant cell coolers are measured and indicated locally by dial thermometers installed in wells in the piping.

The temperature of the cooling tower is also measured and indicated by a dial thermometer.

Water temperatures at the inlets to the treated water cooler and the drain tank condensers are measured with thermocouples installed in wells. Signals from the thermocouples are input to the data logger, where they are used in heat balance calculations.

Pressures at the discharge of each pump and of the supply water to the process water system and the liquid waste system are indicated on locally mounted gages.

A dual pressure switch at the junction of the pump outlets operates the common annunciator in the main control room and provides an interlock for the control circuit when pressure in line 851 is low. This switch monitors the outlet pressure of both pumps, operates a three-way penumatic control valve (HCV-882C1) via control circuits 143 and 145, and switches the supply to the drain tank condensers and instrument air compressors from the pumps to the main ORNL supply line in the event of stoppage or malfunction of both pumps.

Pressure switch PS-882B operates the common annunciator in the main control room when the main ORNL supply pressure is low.

### 3.8.2 Condensate Water System

The condensate water system is shown in Fig. 3.8.2. The water used in this system is condensed from steam supplied from X-10 (ORNL). The pressure of this steam is indicated on a locally mounted gage (PI-SX10). Switch PS-SX10 initiates an alarm in the control room when supply steam pressure is low.

The water level in each of the condensate storage tanks is indicated by means of direct-reading sight glasses mounted on the tanks. The level in the treated water surge tank is indicated by a sight glass but also controlled by a pneumatic level controller mounted on a side well which controls a valve in the line supplying condensate to the tank.

The level in each of the feedwater tanks is measured with a differential pressure transmitter. The 10 to 50-mA electric output signal from each transmitter operates a vertical scale meter indicator and a switch in the main control room. The switches associated with each tank operate a common annunciator in the main control room.

Level in each of the drain tank steam domes is measured with a differential pressure transmitter. The 10 to 50-mA electric output signal from each transmitter is converted to a 3 to 15-psig pneumatic signal which is input to a vertical scale indicator-controller in the main control room. The output of this controller positions a throttling-type control valve in the line which supplies condensate to the steam dome from its associated feedwater tank. During normal operations the control valve is held closed by either moving the controller set point to zero scale or by switching to manual operation. In this mode of operation, condensate in the steam domes is converted to steam in the bayonet tubes which are attached to the steam domes and extend into the drain tanks. This steam rises to the drain tank condensers and is condensed to form condensate which then drains to the feedwater tanks. Since the control valves are closed, this action proceeds until all condensate is in the storage tanks and the steam domes are dry. In this condition no heat is withdrawn from the drain tanks by the system. If the operator wishes to cool the drain tanks after a reactor drain, he can do this by placing the controller on "automatic" and raising the controller set point. The controller then positions the control valve to admit condensate to the steam domes at the rate required to maintain the level requested by the set point. The construction and mode of operation of the bayonet tubes are such that the drain tank cooling rate is a function of the level in the steam domes. If, for any reason, such as an unexpected drain, the drain tank temperature rises to 1800°F, solenoid valves ESV-806A and 807A open and bypass condensate around the control valves to the steam domes. In this mode of operation the drain tank temperature is maintained at or below 1800°F by on-off control action of the solenoid valves.

The temperature of steam from the domes is measured by thermocouples installed in a well near the inlet to the drain tank condensers.

### 3.8.3 Treated Water System

A simplified schematic of this system is shown in Fig. 3.8.3. Water for this system is initially supplied from the condensate water system (Fig. 3.8.2) to a surge tank which provides an expansion volume for the system and a means of maintaining the required pump suction pressure. The condensate is treated with chemicals as required to retard fungical growth and maintain the proper pH. Two parallel (redundant) pumps circulate the treated water through a cooler and then through all components served by the system. Most of these components are inside containment and/or are exposed to high-level nuclear radiation, so the water in this system must not contain material which could be activated and create a radiation hazard in portions of the system outside biological shielding.

Flow of treated water to the fuel and coolant salt pump motor cooling coils, to the component cooling air cooler, and to the component cooling pump oil coolers is measured and indicated locally by rotameters. These rotameters are equipped with switches which operate the common annunciator in the main control room when flow is low. Flows from treated water pump no. 3 to the thermal shield and from the discharge of the

thermal shield inlet pressure regulator (PCV-844C) to the surge tank are also indicated locally by rotameters.

Flows to the reactor and drain tank cell space coolers and in the main thermal shield inlet line were too large to measure with rotameters. These flows are measured with an orifice and differential pressure transmitter in the same manner as described in Sect. 3.8.2 for the process water flow to the treated water cooler.

Pressures at the discharge of all pumps and at the inlets of the filter and strainer are indicated by locally mounted gages.

Since the discharge pressure of the pumps exceeds the pressure rating of the thermal shield, a non-bleed-type pressure reducing regulator (PCV-844C) was provided in the thermal shield cooling water inlet line. Additional protection against overpressuring the thermal shield is provided by pressure switch PSS-844B1 and by rupture disks. The switch monitors the thermal shield inlet pressure and closes a block valve in the inlet line (FSV-844A1) when this pressure is too high. The pressure at the discharge of the regulator and at the inlet to the thermal shield is indicated locally by pressure gages. Pressure switch PS-844B1 initiates an alarm in the main control room when the pressure at the inlet to the thermal shield approaches the rating of the rupture disk. The discharge lines from the rupture disks are vented to the vapor condenser. Since high pressure in these lines, which normally operate at or slightly below atmospheric pressure, would degrade the effectiveness of the rupture disks, a pressure switch (PSS-855A1) was installed to monitor the pressure below the rupture disks and initiate an alarm in the main control room if this pressure rises slightly above atmospheric. To maintain the pressure at the regulator discharge when the block valve (PCV-844C) is closed, a small water flow is bled from the regulator discharge to the surge tank. This flow rate is indicated locally by a rotameter.

Water discharging from the thermal shield is routed through a degassing tank where radiolytic gases generated in the thermal shield are removed and vented to the stack. Water level in the degassing tank is controlled by throttling a valve in the return line from the degassing tank. A differential pressure transmitter measures the level and transmits a 3- to 15-psig pneumatic signal to a level recorder-controller located in the vent house. The pneumatic output signal from this controller positions the control valve.

The air pressure above water level in the surge and degassing tanks is equalized by a line (997) which interconnects the gas spaces in the two tanks. An air purge is maintained through the two tanks and out the degassing tank vent. This purge rate is determined by a pressure regulator (PCV-996A), which obtains its supply from the component cooling air system, by air orifice FE-996C, located downstream from the regulator, and by a small hand-controlled throttling valve in the degassing tank vent line. These control elements also determine the air pressure in the surge tank, which is the base reference pressure for the treated water system and therefore affects all pressures in the system. Pressure switch PS-996-B1 monitors this pressure and initiates an alarm in the main control room if it is too high. Pressure switches PS-997A1 and A2 monitor the pressure in the degassing tank, which is normally the same as that in the surge tank, and initiate an alarm in the control room if it is too high or too low.

Three radiation detectors (RE-827 A, B, and C) monitor the cooling water returning from components located inside the reactor and drain cell containment and initiate closure of block valves in all cooling water lines penetrating reactor and drain cell containment and in all treated water system vent lines when the radiation level is high. Signals from the detectors are input to three ORNL model Q-1916 radiation monitors located in the auxiliary control room (see Sect. 4.8.3.7). These monitors provide an indication of radiation levels in the control room and provide switch actions for alarm and control purposes. The monitors also provide a millivolt level signal, proportional to radiation level, which is input to the data logger. The alarm switches operate a common annunciator in the control room when the radiation level is high. The control switches operate safety circuit relays whose contacts are connected in several two-out-of-three logic matrices which control the block valves. The use of three channels and the matrices permits failure or testing of one channel during operation without overriding protection from the other channels (see Sect. 1.5.4.4, Part IA).

This arrangement was used because closure of the cooling water block valves will initiate a chain of events which will result in a reactor shutdown and drain.

The matrices also operate a block valve (FSV-844A1) in the thermal shield inlet line when the block valve in the return line from the thermal shield is closed. This was done to prevent possible overpressurizing of the thermal shield, which might occur if the reducing regulator (PCV-844C) was defective or improperly set.

The positions of all pneumatically operated block valves are detected by switches which operate indicator lamps on the main control board.

Temperatures of cooling water to and from all reactor system components served by the treated water system are measured with thermocouples installed in wells in

the piping, outside containment. Signals from these thermocouples are input to the data logger, where they are used in heat balance calculations. Since the temperature of all inlet cooling water is the same, one thermocouple located at the outlet of the treated water cooler was sufficient for this purpose.

Temperatures at the inlet and outlet of the treated water cooler are measured and indicated locally by dial indicators installed in wells.

Water level in the nuclear instrument penetration is indicated locally. Low level is detected by a float-type switch which indirectly operates the common annunciator in the main control room via a Rochester alarm unit located in the auxiliary control room.

## 3.9 LIQUID WASTE SYSTEM

The liquid waste system is shown in Fig. 3.9.0. This system consists of the liquid waste storage tank, the waste pump, and waste filter. Also shown is the sump level measuring and jetting system for all cells in the building. The parameters measured in this system are:

1. pressure,
2. level,
3. flow.

### 3.9.1 Pressure

The discharge pressures of the waste pump and of the pit pump are indicated by line-mounted pressure gages PI-305A and 326A.

The 100-psig air supply to the reactor and drain tank cell jets is reduced and regulated by pressure regulator PCV-332A. A gage (PI-332B) located downstream from the regulator indicates the regulated line pressure. The supply pressure of the steam to the storage and spare cells is indicated locally on line-mounted gage PI-315B.

### 3.9.2 Level

The level in the pump room sump is controlled by float switches LS-PRS-A and B, which automatically operate the pump room sump pumps. An alternate system exists in the coolant drain cell sump, which is approximately the same level and is connected to the pump room sump. The level in this sump is controlled by a steam jet which is operated by solenoid valve LCV-PRS-C. A float switch (LS-PRS-C1) in the coolant cell sump controls the solenoid valve and, via the control circuits, initiates an alarm in the main control room when the jet is operated.

The level in the pump room tank (a 55-gal drum into which radioactive waste may be dumped) is monitored by a float switch (LS-PRT-A) which operates a common waste system annunciator in the main control room via a Rochester alarm unit (LA-PRT) located in the auxiliary control room. The contents of this tank may be pumped to either the waste tank or to the catch basin at White Oak Creek by manually operating the pit pump.

The sump level in the reactor cell is measured by means of a weld-sealed pneumatic differential pressure transmitter (LT-RC-C) and a dip-tube-type bubbler system supplied from nitrogen cylinders. The output from the transmitter operates an indicator (LI-RC-C) and a switch (LS-RC-C) in the transmitter room. High level in the reactor sump causes the switch to operate a Rochester alarm unit (LA-RC-C) which, in turn, operates the common waste annunciator in the control room.

The sump level in the drain tank cell is also measured by a bubbler system. Except for the application numbers assigned, this system is identical to the reactor cell sump bubbler system. A second measurement of drain tank cell sump level is made by means of a conductivity-type spark plug probe (LT-DTC-B) in the sump. High level in the sump results in an increase in electrical conductivity between the probe and the sump wall and operates a magnetic-amplifier-type switching device (LS-DTC-B) which, in turn, operates the reactor cell sump level alarm unit (LA-DTC-A) and the common waste system annunciator in the control room.

The level in the waste tank is measured with a weld-sealed electric differential pressure transmitter (LT-WT-A) and a bubbler-type dip tube. The output from the transmitter operates an indicator (LI-WT-A) in the control room and is retransmitted to the central waste monitoring station at ORNL. The transmitter amplifier (LM-WT-A) is remotely located in the transmitter room.

The level in all other sumps is measured by a common manometer (LI-FSC-A) located in the transmitter room. Valving the bubbler-type dip leg provides for the selection of which system is to be monitored by the manometer. Each system has a switch which initiates an alarm in the control room on high level. For example, switch LS-FSC-A, on the spent fuel storage cell bubblers, operates a Rochester alarm unit which, in turn, operates the common waste system annunciator in the control room. Each sump has a jet which can be valved in to empty the sump to the waste tank. The reactor and drain tank sumps are air-operated. All other cells have steam-operated jets. Saunders-type block valves

(FCV-333-A1, A2, A3, and A4), installed in the lines between the jets and the waste tank, close in response to a signal from the containment safety circuits and prevent possible escape of highly radioactive materials from the reactor cell to the waste system in the event of high pressure or radioactivity in the reactor cell.

### 3.9.3 Flow

The flow to each bubbler-type dip leg is measured by a small purge-type rotameter. A constant differential pressure-type regulator across each purge rotameter ensures constant flow to the dip leg regardless of variations in either supply or cell pressure. For example, purge flow to the reactor cell is measured by rotameter FI-RC-C1 and controlled by flow controller FC-RC-C1. Except for the application number assigned, the purge flow instrumentation for all other sump bubblers in the waste system is the same.

## 3.10 VAPOR CONDENSING SYSTEM

The vapor condensing system is shown in Fig. 3.10. This system, which consists of an 1800-ft$^3$ vertical condensing tank (VT1) and a 3900-ft$^3$ gas retention tank (VT2), is separated from the reactor cell by two rupture disks and is vented through filters to the containment stack.

This system is installed for use as a steam condenser and volume expansion system to prevent overpressure in the reactor containment cell in the event of rupture of the fuel piping and water piping, which would generate large quantities of steam. The vertical tank is normally about two-thirds full of water. Since the water is necessary, no means are provided to drain the water from the tank.

Pressure in the system is measured by a compound gage (PI-VT1-D) locally mounted at an alarm panel adjacent to the horizontal gas retention tank. A pressure switch (PS-VT1-C) initiates an alarm at a local annunciator when pressure in the tank is excessive.

Temperatures of the water and in the vapor space are measured by sheathed thermocouples TE-VT1 and 2, which are installed in wells. Signals from the thermocouples are read out on the data logger.

Two level detectors measure the water level in the vertical vapor condensing tank. The first is a dip tube bubbler type with purge gas supplied from the normal nitrogen supply (see Sect. 3.14.1). The bubbler purge rate is determined by flow controller FC-VT1-E and is displayed on an integrally mounted gage (FI-VT1-E). A solenoid valve (ESV-VT1-F) blocks the purge line in the event of high pressure or radiation in the reactor cell. This action is initiated by the containment safety circuits (see Sect. 4.8.1). The pressure of the dip tube is sensed by a pneumatic differential pressure transmitter (LT-VT1-A). The 3- to 15-psig output signal from this transmitter is indicated on a locally mounted gage.

The second system is a series of magnet-reed switches operated by floats restrained on a vertical rod and located so that two switches (LS-VT1-B3 and B4) are above normal water level and two (LS-VT1-B1 and B2) are below normal level. Each switch operates a local annunciator which, in turn, and together with pressure annunciator PA-VT1-C, operates a common annunciator in the control room.

There are no automatic control actions taken from either the level or pressure measurements made in this system. A hand valve in parallel with the rupture disk allows this system to be pressurized with the reactor cell during containment integrity tests.

## 3.11 CONTAINMENT VENTILATION SYSTEM

The MSRE containment systems serve to protect the public, the operating personnel, and plant equipment from exposures to large amounts of radioactivity and other hazardous materials. The systems must be adequate to prevent escape of these materials to surrounding areas during operations and maintenance and in the event of any credible accident (see Analysis of Hazards, Part V). These requirements are met by providing at least two independent containment barriers between hazardous materials and the surrounding atmosphere (see Sect. 1.2.3.1).

During operation of the MSRE, the fuel system pipe and equipment walls form the primary barrier. The fuel system is enclosed in the reactor and drain tank cells, which form the secondary barrier. These cells are normally operated at subatmospheric pressure to assure inleakage.

The third containment barrier, controlled ventilation, is provided for all areas that surround the secondary containment barrier. The containment ventilation system provides a continuous and controlled flow of air through all areas where radioactive or beryllium contamination is likely to occur. Such areas include the high-bay enclosure, the reactor and drain tank cells (during maintenance), the six smaller special purpose cells, the electric service areas, transmitter room, service tunnel, special equipment room, coolant cell, vent house, and charcoal bed cell. The general arrangement of Building 7503 is shown in Figs. 4.3, 4.4, and 4.5,

Sect. 4, Part I. The design and operating characteristics of the ventilating system are described in Sect. 13, Part I. The instrumentation and controls for the system are described here.

Instrumentation is applied as shown in Figs. 3.11.1 and 3.11.2, which combine to form a simplified version of ORNL drawing D-AA-B-40515,[1] Containment Air Instrument Application Diagram. Either of two 21,000-cfm (normal capacity) centrifugal fans, located outside of the reactor building near the base of a 100-ft-high stack (see Fig. 3.2, Sect. 3, Part I) is utilized to induce air flow through the various containment areas. Air is withdrawn from the enclosed areas through one of two main exhaust ducts, lines 927 and 930, and passed through a bank of CWS filters before discharge to atmosphere from the 100-ft-high stack. Some enclosed areas receive air directly from the outside atmosphere, but the major portion enters the high-bay area through the inlet filter house. In general, the flow of air is from the north end of Building 7503 toward the exhaust stack at the south end and progresses from the less hazardous to the potentially more hazardous areas. The ventilated areas are operated at less than atmospheric pressure, and the primary concern is for maintaining this negative pressure rather than for ventilating at an established flow rate. The range of acceptable flow rates is rather broad for most areas (see Table 13.1, Part I).

For convenience the ventilation system may be divided into four main parts: the contained areas and connecting ducts, the filters, the fans, and the stack. The instrumentation and control systems for each of these parts are discussed in the following sections.

### 3.11.1 Contained Areas and Connecting Ducts

During normal operations, the reactor and drain tank cells are sealed, and the bulk of the air in the high-bay area (12,000 to 15,000 cfm) is exhausted through line 935, which has two openings near the sampler-enricher at the southeast corner of the area (see Fig. 3.11.1). A remote-operated, motorized damper,[2] HCV-935A, permits regulation of the total air flow. During maintenance operations, the two series-connected valves, HCV-930A and HCV-930B, are opened, and the cell roof plugs and seals are removed. The air from the high-bay area then flows into the reactor cell and is exhausted through a 30-in.-diam duct, line 930. Although line 930 has the capacity to handle 15,000 cfm of air flow, the openings used for maintenance are usually small, and the bulk of the air will continue to be withdrawn through line 935.

Two series-connected valves are used in line 930 to satisfy secondary containment requirements when the reactor cell is sealed. The two valves are mounted close together in line 930 where it passes through the south end of the service tunnel. Both are wafer-type butterfly valves with resilient seats and motorized operators.[2] The rated operating pressure for each valve body is 50 psig at 200°F. The shaft seal is designed to permit inert gas purging at pressures to 50 psig. The total leak rate through the stuffing box to ambient and across the seat when 50 psig pressure is applied to one side of the valve is less than 0.0001 lb/min. The valves are tested for leaks periodically by pressurizing the short space in the line between them with air.

The operators on both butterfly valves and on the ventilation damper HCV-935 are speed reduction gear boxes driven by electric motors. Each motor is normally operated by two identical sets of pushbutton switches and position indicator lamps, one set mounted locally and one mounted on MB3 in the main control room. The motor control circuits (No. 565, 566, and 567) are described in Sect. 4.8.6.2. A handwheel on each gear box provides a means for manual operation. Operational limits are automatically imposed by two limit switches on each gear box. A geared rotary drum switch governs valve disk travel and energizes the position indicator lights on both the opening and closing directions of valve stem travel. A torque-actuated switch also governs valve disk travel in both directions and prevents torque overload damage by limiting the amount of thrust exerted on the valve disk when seating or when moving against some obstruction in the line.

Air enters the high-bay area through the inlet air filter house at a rate between 14,000 and 17,000 cfm. It passes through a dust filter having a pressure drop (when clean) of about 0.028 in. $H_2O$. A bypass damper in the side of the house is counterweighted to open if the negative pressure downstream from the dust filter exceeds 0.35 in. $H_2O$. This assures an adequate supply of air should the filters become plugged. The air is delivered to the high-bay enclosure through duct 953. A manual damper in this line permits adjustment of the negative pressure in the enclosure. Another counterweighted damper in bypass duct 954 opens automatically at a negative pressure of 0.45 in. $H_2O$. This prevents excessively low pressures which could collapse the high-bay enclosure.

The operating pressure in the high-bay area is some value between 0.1 and 0.3 in. $H_2O$ referenced to atmosphere. This pressure is detected by differential pressure transmitter PT-HB-A,[3] which transmits a pneu-

matic signal proportional to pressure to indicator[4] PI-HB-A, to two pressure-actuated switches,[5] PS-HB-A1 and A2, and a signal modifier,[6] PM-HB-A, all mounted on auxiliary board AB1[7] in the auxiliary control room. The two pressure switches initiate an alarm when the high-bay pressure is too high (>0.1 in. $H_2O$ negative) or too low (<0.3 in. $H_2O$ negative). The signal modifier PM-HB-A converts the pneumatic signal to an equivalent millivolt signal which is transmitted to the computer data logger. Differential pressure transmitter PT-HB-A is mounted on containment air panel CAP-2[8] in the high-bay area. The locations of CAP-2 and other containment air system instrumentation components are shown on ORNL drawing E-HH-Z-59565.[9]

A small volume of air also leaves the high-bay enclosure through six small cells which have openings in the floor of the enclosure. The air enters the cells through the unsealed spaces between the concrete blocks covering the openings and is exhausted by ducts 940 through 946 (Fig. 3.11.1). A manually adjustable damper in each duct is used to regulate the air flow and pressure in each cell. The cells are always maintained at pressures lower than the pressure in the high-bay area. Draft pressure gages,[10] mounted on CAP-2, indicate pressures in the individual ducts.

Flow element FE-940B in duct 940 is a flat plate orifice[11] which measures the flow rate of the air leaving the fuel processing cell. The bypass damper remains open when the fuel processing system is not in operation. The damper is closed when fuel is processed, and all of the cell exhaust air passes through FE-940B. When fuel is processed, the resulting off-gas, which contains hydrogen, is discharged into duct 940. As long as sufficient air flow is maintained, the hydrogen concentration will remain low and the mixture will not become explosive. The pressure drop across the orifice is measured by differential pressure transmitter[3] FT-940B, which transmits a pneumatic signal proportional to flow rate to flow indicator[4] FI-940B and to pressure-actuated switches[5] FS-940B1 and B2, all mounted on panel CAP-2. Switch FS-940B2 operates on low flow in control circuit 120 (see Sect. 4.2.4.2) to close fuel storage tank vent valve HCV-692A1. Switch FS-949B1 opens on low flow to initiate an alarm in the main control room. The sodium fluoride absorber (SFA) and the process instrument racks (CP3) containment enclosures are extensions of the fuel processing cell. The instrument enclosure is connected directly to the cell by duct 979. The SFA enclosure is evacuated through duct 978 by a small booster fan which discharges into the cell. Both are operated at pressures less than the pressure in the high-bay enclosure. Draft pressures in the enclosures are indicated by gages[10] PI-SFA-C and PI-CP3-B mounted on the west wall of the high-bay area near the two enclosures. If the temperature rises above 1.0 in. $H_2O$ negative, switches[12] PS-SFA-C1 and PS-CP3-B1 initiate alarms on the fuel processing system control panels, CP1 and CP2, in the high-bay area (see Sect. 3.13).

Gases vented from the waste storage tank (WT) in the liquid-waste cell are exhausted through a 6-in. pipe, line 948, to a booster blower in the adjoining remote maintenance pump cell; this location makes the blower more accessible for maintenance. The blower discharges waste tank off-gas, which may at times be radioactive, directly into exhaust duct 945. This prevents the off-gas from entering the remote maintenance cell, which is open to the high-bay area a major portion of the time. Control circuit interlocks stop the blower if exhaust air flow to the stack fans is lost.

Duct 937 exhausts the transmitter room and the electrical service areas adjacent to the reactor and drain tank cells. Outside air enters the transmitter room and flows into the electrical service areas where it enters duct 937. The transmitter room is always maintained at a lower pressure than the electrical service areas. Draft pressure gages[10] $P_dI$-937-A and $P_dI$-938-A, mounted on the east wall of the transmitter room, indicate the differences in pressure existing between the transmitter room and the electrical service areas and between the transmitter room and the 840-ft level of Building 7503.

Ducts 937 and 940 through 946 combine to form a large manifold, duct 936, which is connected to main exhaust duct 927 by duct 928. Exhaust flow from these areas is assured as long as the manifold operates at a negative pressure with reference to the high-bay area. If this difference is less than 1.0 in. $H_2O$, pressure switch[12] $P_dS$-936-A operates to sound an alarm in the auxiliary control room.

Draft pressure gages[10] PI-SER-B, $P_dI$-933, $P_dI$-ST-A, $P_dI$-VH-A, and PI-950-A indicate negative pressures existing in the special equipment room (SER), the coolant cell (CC), the service room and tunnel (SR and ST), the vent house (VH), and the charcoal bed enclosure. Gages connected to the special equipment room and the coolant cell are mounted together in a small panel on the south wall of the high-bay area; those connected to the service room and tunnel are mounted on the wall of the service room, and the gages connected to the vent house and charcoal bed enclosures are mounted outside the vent house on the south wall. Pressures indicated for the special equip-

ment room, the service room and tunnel, the vent house, and the charcoal bed enclosure are all referenced to atmosphere. The pressure indicated for the coolant cell is referenced to the high-bay area. The range of negative pressures existing in these areas varies from 0.1 to 2 in. $H_2O$.

Radioactivity levels are monitored in the fuel processing system instrument enclosure (CP3), the reactor and drain tank cells, and the coolant cell. The CP3 enclosure is monitored by process radiation detector RE-CP3-A, which transmits an electrical signal to RM-CP3-A on fuel processing control panel CP2. RM-CP3-A modifies the signal to operate an integrally mounted indicator RI-CP3-A1 and limit switch contact RS-CP3-A1. The switch contact opens when the radioactivity level exceeds the desired limit and actuates the annunciator on panel CP1. Detector RE-CP3-A is an Anton 106C G-M tube, and RM-CP3-A is an ORNL Q-1916 logarithmic response gamma radiation monitor. Both components are described in Sect. 2.10.

The reactor cell, drain tank cell, and the coolant cell are monitored by radiation detectors RE-6005-1 through 3, RE-6000-1 through 3, and RE-6010. The six elements in the reactor and drain tank cells are connected to electrometer RM-6000 through a six-position selector switch, HS-6000. Element RE-6010 in the coolant cell is connected directly to electrometer RM-6010. The selector switch and both electrometers are mounted on nuclear panel NP3 in the auxiliary control room. The electrometers operate indicators only and are not equipped with alarm or control interlock contacts. Section 2.10 gives a complete description of these systems.

### 3.11.2 Containment Air Filters

Air leaves the contained areas through main exhaust ducts 927 and 930, where it is passed through a bank of filters before discharge from the 100-ft-high stack. The filter pit, the fans, and the stack are all located immediately south of Building 7503.[9] The instrumentation for the filter bank and the fans is mounted in a weatherproof panel, CAP-1,[14] located near the filter pit. The air lines serving instruments mounted on the stack also pass through this panel.

The filter bank consists of three parallel sections, each section having a prefilter unit (sometimes referred to as a roughing filter) followed by an absolute filter unit. Manually operated dampers are provided at the inlet and outlet of each section.

Over a period of time the filters become dirty and reduce the total flow of air below the required minimum of 20,000 scfm. The filters must be replaced before this occurs. The condition of the filters is determined by measuring the pressure drop across the entire bank and across each filter unit in the pits. Six draft pressure gages,[10] connected to the pit through manifold valves and $^3/_8$-in.-OD copper tubes, indicate pressure drops across individual filter units as shown in Fig. 3.11.2. The arrangement of gages $P_d$I-F1-A1 and $P_d$I-F1-A2 on filter section F1 is typical for all three sections. The pressure drop across both units in a section varies from 1.6 in. $H_2O$ when the filters are clean to 4.8 in. $H_2O$ when the filters are dirty. $P_d$I-F1-A1 and $P_d$I-F1-A2 have measuring ranges of 0 to 8 in. $H_2O$ and 0 to 2 in. $H_2O$ differential pressure.

The total pressure drop across the filter bank, including the inlet and outlet dampers, is monitored by ECI (see Sect. 5.2.2.4) differential pressure transmitter[13] $P_d$T-927B and differential pressure switch[12] $P_d$S-927B. $P_d$T-927B transmits an electrical signal proportional to differential pressure to two indicators,[15] $P_d$I-927-B1 on panel CAP-1 and $P_d$I-927-B2 on auxiliary board AB1 in the auxiliary control room. The measuring range of the system is 0 to 10 in. $H_2O$. $P_d$S-927-B operates annunciator $P_d$A-927-B in the auxiliary control room if the differential pressure exceeds the desired limit. This can vary from 5.5 to 8 in. $H_2O$, depending on the length of time the filters are used.

The tubing connections between the filter pits and the instruments were made with considerable care to avoid conditions which might cause large measurement errors. The tubes are all $^3/_8$-in. OD and are installed with a continuous downward slope from panel CAP-1 to the pits. This allows condensed moisture to drain out rather than collect in traps where it can produce errors by freezing or by manometer action.

### 3.11.3 Stack Fans

It is important to maintain a continuous flow of air through the contained areas (see Part V, Sect. 6.1, Reactor Safety Analysis). For this reason two exhaust fans, SF1 and SF2, are provided as shown in Fig. 3.11.2. Either one of the two fans may be used to exhaust the containment enclosures, but for normal operations fan SF1 is run continuously, with fan SF2 in a standby condition. If for any reason the flow stops or is significantly reduced, pressure switches[12] PS-927A1 and A2 operate in control circuits No. 254 and No. 526 (see Sect. 4.8.4.1) to automatically start standby fan SF2 and shut down fan SF1. This action is annunciated in the auxiliary control room (see circuit 891, Fig.

4.1.53). Although the operator may choose to run either fan, the automatic switching feature is available only if SF1 is running and SF2 is placed in the automatic control mode.

For normal operating conditions the air flow varies from the maximum rate of 28,000 scfm, when the filters are clean and the static pressure at the fan inlet is 5.5 in. $H_2O$ negative, to the minimum rate of 21,000 scfm when the static pressure at the fan inlet is 10.0 in. $H_2O$ negative. When the filters are clean, the pressure upstream from the filter pits, as indicated by gage[10] PI-927-A1, is approximately 4.0 in. $H_2O$ negative. This pressure rises toward zero as flow is reduced. When it reaches 1.0 in. $H_2O$ negative, switches PS-927A1 and A2 open to switch the fans.

The fan discharge dampers, FCO-925A and FCO-926A, are operated by the electrical control circuits described in Sect. 4.8.4.1. Each damper is equipped with a pneumatic diaphragm-type spring-loaded operator[2] connected to the damper blades by a lever mechanism. When SF1 is running, the three-way solenoid valves, FCV-925A and FCV-925B, are both energized, and air pressure is applied to operators FCO-925A and FCO-926A. With pressure applied to both operators the SF1 discharge damper FCO-925A is open and SF2 discharge damper FCO-926A is closed. When the control circuits switch the operation from fan SF1 to SF2, the solenoids deenergize and vent the damper operators; SF2 discharge damper FCO-926A opens and FCO-925A closes to prevent backflow through fan SF1.

The solenoid valves FCV-925A1 and FCV-926A1 are located near the fans and connected to terminals in containment air panel CAP-1. Switches PS-927A1 and A2 and pressure gage PI-927A are also located in panel CAP-1.

### 3.11.4 Containment Air Stack

A Pitot tube,[17] FE-S1-A, connected to differential pressure transmitter[3] FT-S1-A continuously monitors the total air flow through the containment air stack. Both instruments are mounted on the stack at the 40-ft level.[9] At the full scale flow rate of 30,000 scfm the Pitot tube produces approximately 1.13 in. $H_2O$ differential pressure[18] which is converted by the transmitter to a proportional 3- to 15-psig pneumatic output signal. This signal operates flow indicator[19] FI-S1-A, flow switch[5] FS-S1-A, and signal modifier[6] FM-S1-A, all mounted on control board MB3 in the main control room. F1-S1-A is a vertical strip-type indicator with a square root scale calibrated to read directly in percent of full scale volume flow rate. Flow switch FS-S1-A opens when the flow rate falls below 20,000 scfm and operates annunciator FA-S1-A (see circuit 890, Fig. 4.1.53) in the auxiliary control room. Signal modifier FM-S1-A converts the pneumatic signal to a proportional millivolt signal, which is recorded by the computer data logger (see Sect. 2.12).

Air from the contained areas is monitored for excess radioactivity as it passes through the stack by radiation detection elements RE-S1-A, RE-S1-B, and RE-S1-C. Electrical signals proportional to the activity levels are transmitted to indicating, recording, and alarm instruments on nuclear board NP5 in the auxiliary control room and to the computer data logger. These instruments are fully described in Sect. 2.11.

## REFERENCES


1. Oak Ridge National Laboratory drawing D-AA-B-40515, Containment Air Instrument Application Diagram.
2. Oak Ridge National Laboratory specification XS-186, addendum No. 1, paragraph 16-04.
3. Oak Ridge National Laboratory specification MSRE-74.
4. Oak Ridge National Laboratory specification MSRE-120.
5. Oak Ridge National Laboratory specification MSRE-38.
6. Oak Ridge National Laboratory specification MSRE-117.
7. Oak Ridge National Laboratory drawings:
   - D-HH-B-40569, Aux. Control Panel Board No. 1, Panel Layout
   - D-HH-B-41596, Aux. Control Panel Board No. 1 – Wiring Diagram
   - D-HH-B-41633, Aux. Control Panel Board No. 1 – Pneumatic Diagram
8. Oak Ridge National Laboratory drawings:
   - D-HH-Z-55559, Containment Air Panel No. 2, Panel Layout
   - D-HH-Z-55562, Containment Air Panel No. 2, Wiring Diagram
   - D-HH-Z-55561, Containment Air Panel No. 2, Pneumatic Diagram
9. Oak Ridge National Laboratory drawing E-HH-Z-59565, Containment Air System – Field-Mounted Instruments Location.
10. Oak Ridge National Laboratory specification MSRE-93.

11. Oak Ridge National Laboratory specification MSRE-256.
12. Oak Ridge National Laboratory specification MSRE-20.
13. Oak Ridge National Laboratory specification MSRE-10.
14. Oak Ridge National Laboratory drawings:
D-HH-Z-40621, Containment Air Panel No. 1, Layout and Assembly
D-HH-Z-55558, Containment Air Panel No. 1, Wiring Diagram
D-HH-Z-40624, Containment Air Panel No. 1, Pneumatic Diagram
15. Oak Ridge National Laboratory specification MSRE-22.
16. Oak Ridge National Laboratory drawings:
D-HH-B-40569, Aux. Control Board – Panel No. 1 Layout
D-HH-B-41569, Aux. Control Board – Panel No. 1 Wiring Diagram
D-HH-B-41633, Aux. Control Board – Panel No. 1 Pneumatic Diagram
17. Oak Ridge National Laboratory specification MSRE-100.
18. F. W. Dwyer Manufacturing Co. Bulletin No. R-10.
19. Oak Ridge National Laboratory specification MSRE-40.
20. Manufacturer drawings:
Philadelphia Gear Corporation
Bulletin 8-58
Bulletin 9-58
Bulletin 15-60
Publication LMI-161
Drawing B-70483 Wiring Diagram
Conoflow Corporation drawings:
No. A3-21, Model B-10S Diaphragm Operator
No. A6-38, Model B51 and 52XR Diaphragm Operator
American Warming and Ventilating Company drawings:
No. 1145, High Temperature Breeching Dampers
No. DAA-D-1063-B Control Dampers
F. W. Dwyer Manufacturing Company:
Bulletin R-10
Bulletin E-30
Bulletin A-1

## 3.12 SAMPLING AND ENRICHING SYSTEMS

Instrumentation is provided to control the operation of the sampling and enriching systems of the MSRE. The experimental facility provides one system for sampling, enriching, and poisoning the fuel salt,[1,2] another system for sampling the coolant salt,[1,2] and a third system for sampling fuel salt in the processing plant.[2,3] The most pressing problem of the sampler-enricher for the fuel salt is to maintain a minimum of two barriers against the escape of radioactive gases or particulates. The quantities of activity that can be released by the other two systems are much lower; consequently, the instrumentation requirements are less stringent for the coolant-salt sampler and the fuel processing sampler.

### 3.12.1. Fuel Salt Sampler-Enricher

A schematic diagram of the fuel salt sampler-enricher system is shown in Fig. 3.12.1A. The system consists of a transfer tube connecting the pump bowl through two gate valves to a leak-tight two-chambered shielded transfer box on the operating floor. The sample transfer tube passes through both the primary and secondary containment barriers in the MSRE. Sampling or enriching is accomplished by raising or lowering the capsule while alternately opening and closing barriers and purging the exposed volumes to the off-gas system.

**3.12.1.1 General instrumentation requirements.** As shown in Fig. 3.12.1B, a helium buffer and leak detection system is provided for mechanical seals and valves. Miniature strain gage pressure transducers are connected to the buffer lines to the primary containment areas and barrier seals. These transducers provide signals to be used by electronic Consotrol instrumentation (ECI) to operate and control the barrier closure operators and solenoid valves in the off-gas and containment lines. Electrical interlocks and alarms are provided to ensure that there are always two or more independent barriers against the release of activity. In some cases these barriers consist of two or more block valves. In other cases the barriers consist of one block valve and at least one fixed barrier, such as a pipe or vessel wall. Care was taken in the design to ensure that the protective interlocks were truly independent of the "protected failure," that is, that the mechanism which caused the failure of a containment barrier could not also cause failure of the protective interlocks. To further ensure that a single failure will not cause loss of protection, all instrumentation and control circuitry associated with the containment of radioactive particles and gases are designed and installed

in accordance with the practices established at ORNL for the design and installation of reactor protective systems. Such systems are designated as being "safety grade," as distinguished from the "control grade" systems used for routine control and equipment protective operations, and employ the principle of redundancy separation (isolation) and identification. The safety channels in the sampler-enricher use one-out-of-two logic; that is, two separate and independent channels are provided for each measured variable, either of which will produce the required protective action. Although only two channels are required to obtain the required redundancy for a given protective action, three safety channels were required in the sampler-enricher. The extra channel was required because three barriers exist in the sampler-enricher, any two of which serve as a redundant barrier when the third barrier is opened to insert or remove the sample capsule. The three safety channels are, therefore, mutually redundant and are designed to prevent intentional opening of one barrier unless the other barriers are intact.

The requirements for containment of radioactive materials and for exclusion of oxygen from the contained area dictated a high degree of leak-tightness in the containment barriers and in all instrument components that are connected to and form a part of these barriers. Since the capsule access chamber is connected directly to the reactor pump bowl during certain stages of sampling or enriching operations, the walls of this chamber, and of the piping, valves, or instrument components connected to the chamber (or to the line between the chamber and the reactor), are considered to be part of the reactor primary containment and are required to leak less than $10^{-8}$ std cc of helium per second. All instrument components in this category have weld-sealed construction with autoclave-type or welded connections. Specifically, these components include strain-gage-type pressure elements, solenoid valves, and the associated instrument tubing. All solenoid valves used as containment blocks in the safety system are specially constructed valves having a specified leakage through the seat of less than $10^{-6}$ cc of helium per second when helium at 50 psig is applied at either end connection and the other end is evacuated to less than $10^{-4}$ mm Hg absolute pressure. Some of these solenoid valves are required to operate under vacuum conditions during certain stages of sampler operation, and, consequently, relatively large port openings are required to obtain reasonable evacuation times. Since the port size requirements are in direct conflict with the shutoff requirements, these components were specially designed and procured for the service. Further discussion of the special strain gage pressure transmitters and solenoid valves is given in Sect. 6 of this report.

A lesser degree of leak-tightness is required of the instrument components that are connected to and form a part of the secondary containment barriers. Although these components are required to have a high degree of helium leak-tightness, gasketed construction and threaded or gasketed connections are permitted. However, in some cases, considerations of operational requirements and/or cost dictated the use of components in the secondary system having a quality equivalent to that required for the primary containment system. Three control and two relay panels are provided to house and separate the control- and safety-grade instruments. Figure 3.12.1C shows the sampler-enricher and control panels in place at the reactor site during preoperational testing.

**3.12.1.2 Helium system.** Helium is supplied at 250 psig through line 509 to control panel No. 1,* where it is reduced in pressure to 80 psig and 40 psig by pressure regulators PV-650A and PV-509B respectively. The 250-psig line, the leak detector headers, and the buffer header are ½-in. sched 40 pipe. All other helium lines are ¼-in.-OD autoclave tubing with 30,000-lb autoclave fittings. Low pressure on the 250-psig line is detected by pressure switch PS509A and indicated by annunciator PA509A on panel No. 1.

The 80-psig helium is supplied in line 650 through flow restrictor FE-650D to three-way solenoid valves HSV-651A, HSV-652A, and HSV-653A. These valves supply helium to the pneumatic clamps which open and close the capsule access chamber door. Valve HSV-652A supplies the three clamps on the hinged side of the door to close the door, followed after a 15-sec delay by HSV-653A, which supplies helium pressure to the three clamps on the opposite side to clamp the door closed. HSV-651A supplies helium to the reverse side of the piston, swinging the clamps out of the way and permitting the door to open by spring action. The spent helium is vented through the three-way valves and line 675 to the containment air system. Pressure on line 650 is indicated by PI-650B on panel No. 1. The line is protected against overpressure by a rupture disk and relief valve which discharge to the containment air system. An excess flow valve (FE-650C) connected in parallel with the relief valve prevents buildup of

*Unless otherwise stated, panel numbers referred to in Sect. 3.12.1 are preceded by SE on drawings and other documentation; for example, sampler-enricher panel No. 1 is panel SE-1. Similarly, panel No. 1 in Sect. 3.12.2 is fuel processing sampler panel PS-1, and panel No. 1 in Sect. 3.12.3 is coolant-salt sampler panel CS-1.

pressure downstream of the rupture disk from small leakage flows through the disk. Failure of the rupture disk is detected by pressure switch PS-650C and indicated by annunciator PA650A on panel No. 1.

The 40-psig helium through line 509 supplies the remainder of the system, including leak detector headers, the buffer header, and various other purge and buffer lines. Pressure on this regulated helium header is indicated by PI-509C. Low pressure is detected by pressure switch PS509D and indicated by annunciator PA509D. Both are located on panel No. 1. This line is also protected against overpressure by a rupture disk and relief valve in branch line 674, which discharges to the containment air system. Again, failure of the rupture disk is indicated by an annunciator alarm PS-674A and PA674A on panel No. 1, and protection is provided against buildup of pressure downstream from the rupture disk by excess flow valve FE674A.

The leak detection system is divided into two headers, No. 1 for those seals considered to be control grade and No. 2 for those considered to be safety grade. Both headers, with their associated pressure gages and annunciator alarms, are located in panel No. 1. The No. 2 header is isolated as far as practical in the lower half of the panel. (In general, on all three panels the safety-grade instrumentation is located in the lower portion.) Seals fed from No. 1 header are area 3A; removal valve flange, illuminator, manipulator, and periscope are area 3A-2B. The safety-grade seals are the operational valve flange and stem, the maintenance valve flange and stem, and area 1C. There is a capillary flow restrictor (FE664A and FE644A) in the supply line to each header to restrict the flow should a leak develop. If the header supply valve is closed, a leak in a seal on header No. 1 will result in a pressure drop, which is detected by pressure switch PS664B and indicated by an alarm on annunciator PA664B and a drop in the pressure reading on PI-664B. Similarly, a seal leak on header No. 2 will be detected and indicated by PS644B, PA644B, and PI644B. There is a hand valve mounted on the panel for each branch line from each header. The valves are normally open during operation and are used to determine the location of the leak.

The buffer header, located on panel No. 3, has branch lines which pressurize the space between the double seals of the capsule access chamber door, the removal valve, the operational valve, and the maintenance valve. Each line has double check valves to prevent backflow of possibly contaminated gas. Capillary flow restrictors FE669A, FE670A, FE668A, and FE655A restrict flow and produce a pressure drop when a leak develops or when the seals are intentionally opened. Strain gage pressure transducers PE669B, PE670B, PE668C, and PE655C (on each line on the downstream side of the double check valves) sense the change in pressure which occurs when a leak develops or a valve is opened and transmit this change as an electrical signal proportional to pressure to the electronic Consotrol instrumentation on panels No. 1 and 2. There the signal is utilized first as a 0- to 100-psia recording for each valve and the access door and also, by means of an electronic switch, to supply electrical interlocks for control and alarm purposes. The alarm or open position of each valve and the access door is indicated by both annunciator alarms and indicating lights on panel No. 2. Low pressure on the buffer header itself is indicated by a separate annunciator alarm on panel No. 2. Solenoid valves HSV655B and HSV668B on the buffer lines to the operational and maintenance valves serve as backup block valves which are interlocked to close in case of high radiation in the line or high fuel pump bowl pressure (see circuit 381, Fig. 3.12.1F). Further information on the operation of instrumentation, interlocks, and alarms associated with the buffer lines is given in Sects. 3.12.1.4, 3.12.1.5, and 3.12.1.6 of this report.

The remaining lines served by the 40-psig header are 657, 666, 671, and 672. Each of the lines has its own panel-mounted hand valve, pressure regulator (PV), and pressure gage (PI) for individual control and indication. Line 657, which supplies helium to purge area 1C, is provided with a flow restrictor (FE657C), double check valves to prevent backflow, and a solenoid block valve (HSV657D) which is interlocked to close in case of high radiation in the line or high fuel pump bowl pressure (see circuit 381, Fig. 3.12.1F). A strain gage pressure transducer (PE-IC-E), on the downstream side of the double check valves, provides a signal to be utilized for a 0- to 100-psia recording and to obtain electrical switch action for control interlocks and for high-pressure annunciator alarm. The pressure signal for this area 1C transducer is used in conjunction with a similar transducer (PE-AR3A) in area 3A to provide a differential signal to ensure that the capsule access chamber door cannot be opened unless area 1C pressure is equal to, or less than, area 3A pressure. Line 666, which supplies the removal seal buffer, is provided with a capillary flow restrictor FE666A, an on-off solenoid valve (HCV666D) with indicating light (ZI666D) to show when the seal is being pressurized, a pressure switch (PSS666E) supplying interlocks for control, and another indicating light (ZI666E) to show when the seal pressure is greater than 10 psig. This pressure indicates that the seal is closed, and, due to the restricted flow of the cover gas, it takes about 10 min to reach 10 psig.

The indicating lamp and control interlock circuits are shown in Figs. 3.12.1D and 3.12.1E (circuits 357, 358, and 375). As can be seen from circuit 375, valve HCV666D is operated directly by hand switch HS666D and is not restricted by interlocks. Line 671 runs directly from the regulator (PV671A) on the panel to purge the removal area. Line 672, which supplies the area 3A purge, has double check valves in it to prevent backflow. Line 663 connects between these valves and the panel regulator to permit line 672 to pressurize the manipulator cover.

**3.12.1.3 Off-gas system.** Off-gas from the transfer box inner and outer chambers (areas 1C and 3A) is vented either through or around vacuum pump No. 1 to the auxiliary charcoal beds. Lines from either area can be blocked with two or more valves in series. Area 1C is vented through line 678, which is provided with solenoid valve HSV-678A (in area 3A) in series with air-operated valve HSV-678B1 (in area 3B). The air-operated valve, because of its good leak-tightness, is used as backup to the solenoid valve. Air is supplied to HSV-678B1 through solenoid valve HSV-678B2. Area 3A is vented through line 677 and solenoid valve HSV-677A. Line 677 joins line 678 below HSV-678B1, and the combined vent line passes radiation detectors RE-678C and RE-678D before arriving at the vacuum pump. These radiation detectors provide signals for electrometers RM678C and RM678D on panel No. 2, which in turn provide signals for the reactor data logger and for the high-activity off-gas annunciator alarm RA678C on panel No. 3. At the inlet to the vacuum pump, the off-gas can be directed through the pump by opening solenoid valve HCV678E, or it can be directed around the pump by opening bypass solenoid valve HCV-667A. Normally, the gas would be bypassed around the pump until the activity decays to a level that would not be considered harmful to the pump. Then the pump would be used to evacuate the two chambers. Should the pump be running with the inlet valve closed, or should a high outlet pressure develop, a pressure relief valve is provided to vent around the pump. Both the pump and the bypass line discharge through a check valve to line 542, which discharges through solenoid valve ESV-542A and a hand valve to the charcoal beds to provide protection against backup of radioactive gases from the reactor system. Valve ESV-542A is provided as backup protection for the check valves and is interlocked to close if a high pressure (7 psig) develops in the line or if there is excessive activity in the sampler containment air system (see circuit C380, Fig. 3.12.1F). Containment air activity interlocks are obtained from radiation monitors RM675A and RM675B, discussed in Sect. 3.12.1.4. High off-gas system pressure is detected by two pressure switches (PSS542B and PSS542C) which provide the interlock contacts shown in circuits A378 and B378 (Fig. 3.12.1E). Two switches are used to provide the required safety system redundancy. The hand valve is for maintenance purposes.

The on-off hand switches and indicating lights for the off-gas solenoid valves and vacuum pump are located on panel No. 3. As shown in Fig. 3.12.1F, circuit A380, and Fig. 3.12.1H, switch HS542A must be in the "on" position before any of the valves can be opened. With HS542A in the "on" position, valve ESV-542A is opened if its interlocks are in the permissive state and will be so indicated by indicating light ZI-542A. Another switch must be turned on for each of the other valves before they can be opened. The vacuum pump inlet and bypass valves, HCV-678E and HCV-667A (circuits F380 and G380), are energized (opened) directly by their switches since their circuits do not contain interlocks. The remaining off-gas valves, HSV-678A, HSV-678B1, and HSV-677A (circuits D380, A380, and B380), are opened when their interlocks are in the permissive state and their switches are in the "on" position. To provide protection against the release of excess radioactivity to the containment air system, these valves are interlocked to close if there is excessive radioactivity in the containment air system (see Sect. 3.12.1.4).

To provide further protection against the backup of activity from the reactor system, valves HSV-677A and HSV-678A are also interlocked to close in the event of high pressure in the reactor off-gas system. In general, these interlocks provide redundant actions to ensure that two independent barriers exist between the reactor system and the containment ventilation system, so that a single failure will not cause a release of high-level activity. These barriers may consist of two valve blocking actions or a single valve blocking action or a fixed barrier such as a pipe or vessel wall. For example, a release of activity from the reactor through area 1C, produced by a rupture at the junction of line 677 and 678, is prevented by the redundant blocking action of HSV678A and HSV678B as well as by the blocking action of HSV677A together with the presence of the area 1C vessel wall. Similarly, protection against backup of activity from the reactor off-gas system and subsequent release through a leak in the manipulator boot or the area 3A vessel wall is prevented by the redundant actions of ESV-542A and HSV-677A. Additional "control grade" protection against the release of activity from the reactor through area 1C is provided by

interlocks in circuits A380 and D380, which close (or prevent opening) valves HSV678B1, HSV677A, and HSV678A if both the operational valve and the maintenance valve are open. (Note that interlocks in circuits 362 and 365 prevent opening the operational valve or the maintenance valve if HSV678A is open.)

The maintenance and operational "valve closed" interlocks in circuits A380 and D380 are similar to the "valve closed and sealed" interlocks discussed in Sect. 3.12.1.5 in that the signal for both is obtained from measurement of valve buffer pressure. However, as can be seen from circuits 360, 363, 366, A376, and B376, the "valve closed" interlocks are set to operate at a lower pressure than the "valve closed and sealed" interlocks. The distinction between "valve closed" and "valve closed and sealed" was made because the time required for the buffer pressure to build up to a point where a *closed and sealed* indication was obtained was much longer than the time required to obtain a *closed* indication. To avoid the excessive delays in sampler operations which would have resulted from the use of a *closed and sealed* indication, the *closed* indication was used for the "control grade" interlocks in circuits A380 and D380.

To prevent damage to the manipulator boot resulting from development of excessive differential pressure across the boot during evacuation of area 3A, valve HSV-677A is also interlocked to close and stop evacuation if the pressure in the manipulator boot is 30 in. (water column) greater than the pressure in area 3A. Excessive differential pressure is detected by differential pressure switch $P_d$SS680C (circuit 393), which is connected between lines 680 and 658. Excessive differential pressure also causes an annunciation at the sampler panel. The open condition for each valve is indicated by individual indicating lights. Another indicating light, ZI-OV-MV-A, is provided to show when either the operational or maintenance valve is closed but not completely sealed and the associated interlock restrictions on the operation of valves HSV678A, HSV678B1, and HSV677A have been cleared.

**3.12.1.4 Containment air system.** The manipulator boot and cover and the removal area are exhausted through vacuum pump No. 2 to area 4A. Areas 4A, 2B, and 3B and the access port operator are vented to the containment air system. All the discharged gas, plus the buffer lines to the operational and maintenance valves and to the access port, passes radiation detectors RE-675A and RE675B. These detectors provide signals for radiation monitors RM675A and RM675B on panel No. 2, which in turn provide signals for the reactor data logger, for control interlocks shown in circuits A377 and B377 (Fig. 3.12.1E), and for the high-activity containment air annunciator alarm RA 675A on panel No. 3. Two radiation monitoring channels were provided to satisfy the requirements for redundancy in the containment safety system.

The removal area is exhausted through line 679 and solenoid valve HCV679A to the inlet of the vacuum pump. The open-close hand switch (HS679A) and indicating light (ZI679A) for HCV-679A are on panel No. 3, and as shown in circuit 383 (Fig. 3.12.1G), the valve is interlocked to close on high activity in the containment air or primary area buffer lines. The manipulator boot is exhausted through line 682 and the manipulator cover through line 680. These two lines join, and the combined line exhausts through solenoid valve HSV680B to the inlet of the vacuum pump. HSV-680B does not have an individual control switch, but is controlled by the same switch (HS668B) that operates the solenoid valves in the primary area buffer lines (see circuit 381, Fig. 3.12.1F). One indicating light, ZI-668B, shows the open-closed position of all the valves. Also, HSV-680B is interlocked to close on high fuel pump bowl pressure or high activity in the containment air or primary area buffer lines.

Vacuum pump No. 2 discharges into area 4A, which is vented through line 684 to line 949 to the containment air system. Area 3B is vented through line 660 to line 684. Area 2B is vented through line 659 and solenoid valve HSV659B to area 4A. The open-close hand switch (HS659B) and indicating light (ZI659B) for HSV-659B are on panel No. 3, and the valve is interlocked to close on high activity in the containment air or primary area buffer lines (see circuit B382, Fig. 3.12.1F). Pressure switch PS659A on line 659 gives a high-pressure signal for area 2B annunciator alarm (PA659A) on panel No. 3.

The pneumatic clamps on the capsule access chamber door are vented through line 675 and air-operated valve HSV-675A1 to line 949. Air is supplied to HSV-675A1 through solenoid valve HSV-675A2. The open-close hand switch (HS675A) and indicating light (ZI675A) for HSV-675A1 are on panel No. 3. For convenience in closing both valves simultaneously, the hand switch (HS675A) controls both HSV-675A1 and HSV-659B. HS-675A must therefore be in the "on" position before HSV659B can be opened (see circuit A382, Fig. 3.12.1F). HSV-675A1 is also interlocked to close on high activity in the containment air or primary area buffer lines.

High pressure in area 3A is released through line 658 and a rupture disk to line 675 on the downstream side of HSV-675A1. High pressures in the 40-psig helium

header and the 80-psig access port header are released through rupture disks to line 949 and to the containment air system.

**3.12.1.5 Control and operation of motor drives and solenoid valves.** The removal valve is opened and closed by a pneumatic operator. As shown in Fig. 3.12.1B, air flow to the operator is controlled by solenoid valves HCV-RV-A1 and HCV-RV-A2. The valves are operated by three-position (open-off-close) hand switch HS-RV-A on panel No. 2. From circuit 359 (Fig. 3.12.1D) it can be seen that the removal valve is closed by switch action only; but before it can be opened, the removal seal, operational valve, maintenance valve, and access port must be closed. The open-close position of the removal valve is shown by indicating lights ZI-RV-A1 and ZI-RV-A2, actuated by limit switches ZS-RV-A1 and ZS-RV-A2 at the valve (see circuit 361, Fig. 3.12.1D). The control interlock in circuit 360, which indicates whether or not the valve is closed and sealed, is obtained from ECI switch PSS670B, which receives its signal from pressure transducer PE670B on the buffer line to the valve (see Sect. 3.12.1.2).

The operational and maintenance valves are Limitorque valves and are operated by three-phase motors. The motors are controlled with three-phase reversing starters, with one starter coil in the "open" circuit and the reverse starter coil in the "close" circuit, as can be seen in circuits 362 and 365 (Fig. 3.12.1D). The starters are mechanically and electrically interlocked to prevent both forward and reverse being closed simultaneously. The "open" and "close" circuits for each valve are operated by open-off-close hand switches (HS-OV-A and HS-MV-A) on panel No. 2. The "close" circuit for each valve is interlocked to prevent (or stop) closing if there is a mechanical overload at the valve (torque switch) or if the capsule cable is inserted 4 in. or more. The "open" circuits for each valve are identical. Before either valve can be opened, the fuel pump bowl pressure must be less than 10 psig, the manipulator cover must be on, and the area 1C off-gas valve, access port, and removal valve must all be closed. Limit switches ZSS-OV-A2 and ZSS-MV-A2 stop (or prevent starting) the valve motor when the valve is full open. The open-close position of each valve is shown by panel-mounted indicating lights (ZI-OV-A1, ZI-OV-A2, ZI-MV-A1, and ZI-MV-A2) actuated by limit switches ZS-OV-A3, ZS-OV-A5, ZS-MV-A3, and ZS-MV-A5 at the valves (see circuits 364, Fig. 3.12.1D, and 367, Fig. 3.12.1E). The control interlocks in circuits 363 and 366 indicate whether or not the valves are closed and sealed and are obtained from individual ECI switches (PSS668C2 and PSS655C2), which receive their signals from pressure transducers PE668C and PE655C on the buffer lines to the valves (see Sect. 3.12.1.2).

The capsule access port, as discussed in Sect. 3.12.1.2, is opened and closed by solenoid valves HSV-651A, HSV-652A, and HSV-653A. The valves are operated by open-off-close hand switch HS-651A on panel No. 1. It can be seen from circuit 368 (Fig. 3.12.1E) that when the switch is turned to the "close" position, valve HSV652A and time delay relay K368 are energized. The switch must be held in the "close" position for 15 sec until contact K368A closes, which permits HSV-653A to be energized and completes the closing and clamping of the door. Valve HSV-651A can be energized and the door can be opened if switch HS-651A is turned to the "open" position, if area 1C pressure is equal to or less than area 3A pressure, if the fuel pump bowl pressure is less than 10 psig, if the operational valve is closed, if the maintenance valve is closed, and if the removal valve is closed. The control interlock in circuit 369, which indicates the open-closed position of the door, is obtained from ECI switch PSS669B, which in turn receives its signal from pressure transducer PE669B on the buffer line to the door (see Sect. 3.12.1.2). There are no position-indicating lights since the door is under visual observation of the operator through the periscope.

The capsule cable drive is a Jordan Shaftrol single-phase motor with its forward and reverse windings connected directly in the control circuit (see circuit 370, Fig. 3.12.1E). The motor is operated by three-position (insert-off-withdraw) hand switch HS-CDA on panel No. 2. The insert circuit is interlocked so that the capsule can be inserted only if the operation and maintenance valves are full open. Lower and upper limit switches provide interlocks ZSS-CD-A1 and ZSS-CD-A2 (circuits 373 and 374) to interrupt the circuits and stop the motor when the capsule is inserted or withdrawn approximately 18 ft. These switches also actuate the panel-mounted position-indicating lights (ZI-CD-A3 and ZI-CD-A4, circuit 371). Another limit switch (ZS-CD-A3, circuit 372) provides a control interlock for the condition when the cable is inserted 4 in. or more. Two gear-driven synchro transmitters (ZE-CD-A1 and ZE-CD-A2) are incorporated into the cable drive unit to drive two synchro receivers (ZI-CD-A1 and ZI-CD-A2) on panel No. 2; these receivers provide indication of the capsule position in feet and inches.

Vacuum pumps No. 1 and 2 (circuits A391 and A392, Fig. 3.12.1G) are driven by single-phase motors. The motors are controlled by motor starters and conventional momentary contact push buttons with seal-in. No interlocks are provided other than motor overload. An

auxiliary relay is provided in each motor circuit to give contacts for off-on indicating lights (see circuits B391 and B392, Fig. 3.12.1G). The push buttons and indicating lights are on panel No. 3.

**3.12.1.6 ECI system.** The ECI (electronic Consotrol instrumentation) system is shown in Fig. 3.12.1J. The origin of the pressure signals for the ECI and the use of the control interlocks thus obtained have been discussed in Sects. 3.12.1.2 and 3.12.1.5 of this report. Various components in the system are described in Sect. 5.2 of this report. Tabulations and individual specification of instrument components of the system are included in the *MSRE Instrument Specifications*[4] and *Applications Tabulations.*[5]

As can be seen from circuits 639 and 640 in Fig. 3.12.1J, the wiring for instrument safety channels 655, 668, 669, and 670 is identical. In circuit 639, the direct-current power supply PX-655C and PX-668C supplies 5 V dc to pressure transducers PE-655C for the maintenance valve and PE-668C for the operational valve. The pressure transducers have an output of 0 to 25 mV dc varying in proportion to a pressure signal of 0 to 100 psia. The transducer output is fed to an emf-to-current converter, PM-655C1 for instance, where the 0- to 25-mV dc input is changed to 10- to 50-mA dc output. This milliampere dc output is fed to dual electronic switch PSS-655C1 and PSS-655C2 in series with resistor PM-655C2. Normally, this milliampere signal would be fed to electronic switches and recorders in series as desired. However, safety requirements for these circuits require that the recorder be isolated from the safety circuits. The recorder, due to its maintenance requirements and panel location for readability, cannot be considered as safety grade. The output of resistor PM-655C2 is fed to isolation amplifier PM-655C3, the output of which is a 10- to 50-mA dc input to one pen of two-pen recorder PR-655C and PR-668C.

Circuit 640 (instrument channels AR3A and IC-E) differs from 639 and 641 in that it is "control grade" and does not require the resistor and isolation amplifier. Also, the milliampere output of the converter for each half of the circuit is fed to a differential switch ($P_d$SS-IC-E and $P_d$S-IC-E), in addition to the individual electronic switch and the recorder. This differential switch provides control interlocks for pressure differences between areas 1C and 3A (see Sect. 3.12.1.2).

Electronic switches PSS-589A3 and PSS-592B3 provide high fuel pump bowl pressure control interlocks for use at the sampler-enricher (see circuits A379 and B379, Fig. 3.12.1F). These switches are connected into ECI circuits 436 and 439 on auxiliary board No. 7 in the main control room and receive 10- to 50-mA signals proportional to pump bowl pressure from reactor transmitters PT-589A and PT592B.

Shielded cables are used for all the low-voltage signals between the power supplies, pressure transducers, and emf-to-current converters. Cable disconnects are provided at all the transducers, at transducers PE-655C, PE-668C, PE-IC-E, and PE-669B where their cables penetrate the pressure vessel, and outside the shield for transducers PE-655C and PE-668C to permit the removal of the valve compartment.

**3.12.1.7 Process radiation monitors.** As discussed in Sects. 3.12.1.3 and 3.12.1.4, two sets of radiation monitoring channels are provided on the sampler-enricher to provide indications of the presence of excess activity in the off-gas and containment air systems, to provide signals required to actuate protective interlocks and alarms, and for permanent recording of activity levels on the reactor computer data logger.

Radiation in the off-gas system is monitored by two systems, each of which is composed of a Reuter-Stokes ionization chamber and an E-H Research Laboratories model 202 electrometer (picoammeter). Radiation in the containment air system is monitored by two systems, each of which is composed of an Anton 106C G-M tube and an ORNL Q-1916 logarithmic response gamma radiation monitor. Duplicate channels are provided because of the inaccessible location of the detectors, and, in the case of the containment air monitors, to satisfy the reliability and redundancy requirements of the safety systems.

The Q-1916 monitor is used for monitoring the containment air activity because of its sensitivity, operating simplicity, ease of monitor replacement, fast response, fail-safe features, previous operating history, and relatively low cost.

The ion-chamber-type monitor is used for monitoring the off-gas activity because the higher background and operating activity present in the off-gas lines will at times exceed the range of the Q-1916 and because the ion chamber system has the capability of measuring the full range of activity levels expected in the off-gas system.

Both types of monitors are used in other parts of the reactor systems, and components are interchangeable. These monitoring systems are described in detail in Sect. 2.10, Part IIA of this report.

**3.12.1.8 Instrument power.** Control power for the off-gas, vent line, and buffer line solenoid valves is fed from the 48-V dc instrument power panel No. 1. This dc power is used due to its higher reliability and also because these high-quality solenoid valves were designed for dc operation.

The remaining control and annunciator power is fed from the 120-V ac single-phase instrument power panel No. 2, which in turn is fed from the reliable (solid state inverter) power bus. Control power for operation of the barrier closures and the capsule cable drive is fed from instrument power panel No. 2 through a permissive switch on main board No. 8. This switch must be turned on before the removal valve, operational valve, maintenance valve, capsule access port, or capsule cable drive can be operated. The "on" condition is indicated by a white light on main board No. 8 and by a green "power on" light on sampler-enricher panel No. 2.

Three-phase power for the operational and maintenance valve Limitorque motors is fed from the 208-V ac TVA-diesel instrument power panel No. 5. Single-phase power for control and operation of the vacuum pump motors is fed from 120-V ac instrument power panel No. 7. These motors were placed on a less reliable power source since an outage in their operation could be tolerated and since the more reliable power sources were loaded almost to capacity.

Since the radiation instruments and ECI need very precise regulated power, these instruments were placed on the regulated 120-V ac single-phase instrument power panel No. A3.

**3.12.1.9 Wiring and containment entrance details.** The wiring of instruments and apparatus, whether on the control panels or at the sampler-enricher, is the conventional apparatus-to-terminal-block type of wiring. Interconnections are made between terminal blocks. The exceptions to this rule are the cables between the radiation monitors and the panel meters. These cables are joined by male and female connectors at those points where a break is necessary.

The safety-grade terminal blocks at the control panels, like the safety-grade instruments, are isolated from control-grade terminal blocks and are located at the bottom of the panels. The wiring is color coded as follows: red for safety, blue for ECI (nonsafety), black for 115-V ac control, white for neutral, green for ground, and yellow for annunciator. Wiring for ECI, control, and safety channels Nos. 1, 2, and 3 is bundled separate from each other. Safety channels are separated from each other as well as from control channels. Interconnection wiring at the panels is segregated top and bottom. Safety wiring is in conduits in the base of the panels. There are separate conduits for ECI safety, radiation safety, and safety channels Nos. 1, 2, and 3. Running along the top of the panels are the ECI control in conduits, the radiation control in conduit, and the remaining control wiring in wire ducts. These conduits and wire ducts interconnect with the relay cabinets and the junction boxes at the sampler-enricher.

The relay cabinets are mounted on the side of control panel No. 1. Control-grade relays with their associated terminal blocks are in the bottom cabinet, and safety-grade in the top cabinet. The safety relay cabinet is divided into three compartments, one each for safety channels Nos. 1, 2, and 3. The dividing partitions have small holes in them to permit interconnection wiring between channels. Such interconnections are limited to hot and neutral power wiring and to wiring required to form relay contact matrices. No interconnections were made that would destroy the separation between redundant safety channels. The motor starters for the vacuum pumps, operational valve, and maintenance valve are mounted in the control relay cabinet. Due to space limitations, it was decided to leave the operational and maintenance valve starters in the control relay cabinet, even though they were classified as safety grade. As a precaution, protective covers marked "220V, 3-phase, Safety" were placed over the starters and their associated terminal blocks.

Two junction boxes are provided at the sampler-enricher to house the terminal blocks for interconnecting the control panels and relay cabinets with the solenoid valves, motors, pressure transducers, etc., in the sampler-enricher. The connectors for disconnecting the radiation cables are also mounted in these boxes. The boxes are mounted on a supporting steel framework above area 4A. Control-grade terminal blocks are in the bottom box and safety-grade in the top. Again, the safety-grade box is divided into three compartments, with holes in the dividing partitions to permit interconnection wiring between channels required for power wiring and relay contact matrices. Also, a protective cover marked "220 V, 3-Phase" was placed over the three-phase motor terminals.

All exposed safety wiring between the junction box and sampler-enricher apparatus is mechanically protected from physical damage. Also, as at the control panels, wiring for ECI, control, and safety channels Nos. 1, 2, and 3 is bundled separately from each other. Radiation-resistant wires and shielded cables are used in areas 1C, 2B, 3A, and 3B. Four-pin and eight-pin weld-type receptacles are used to gain access to apparatus inside the pressurized compartments.

### 3.12.2 Fuel Processing Plant Sampler

A schematic diagram of the fuel processing plant sampler is shown in Fig. 3.12.2A. The system consists of a transfer tube connecting the fuel storage tank in the fuel processing cell through one ball valve to a leak-tight two-chambered shielded transfer box on the operating floor. The sample transfer tube passes

through the fuel processing plant containment barrier. Sampling is accomplished by raising or lowering the capsule while alternately opening and closing barriers and purging the exposed volumes to the fuel processing cell.

**3.12.2.1 Comparison with fuel salt sampler-enricher.** The fuel processing plant sampler is the original fuel salt sampler-enricher mockup, and the three control panels are the original panels for the mockup. The more important differences in instrumentation between the processing sampler and the sampler-enricher are that the processing sampler does not have the maintenance valve, and, because it does not penetrate the primary reactor containment, safety-grade instrumentation is not required. Also, because of the lower activity level in the fuel processing system and the reduced containment requirements, lower-quality components with higher permissible leak rate are used for primary sensing elements and block valves. Otherwise, the design for the two is essentially the same, with the exceptions noted in the following paragraphs.

Helium line numbers in the sampler are increased by 1000 over the corresponding line numbers in the sampler-enricher; for example, the buffer line to the removal valve is 670 for the sampler-enricher and 1670 for the processing sampler. All helium lines in the sampler, other than headers, are ¼-in.-OD copper tube with solder-type fittings. The pneumatic operation of the capsule access chamber door is the same. The leak detector header is in one section. The equipment served and the operation of the leak detector and buffer headers are the same. There are no radiation solenoid block valves in the buffer and purge lines.

Off-gas from areas 1C and 3A is vented through or around vacuum pump No. 1 to the fuel processing cell. There is no backup off-gas block valve in line 1678 from area 1C. Operation of the off-gas solenoid valves is shown in Figs. 3.12.2B, 3.12.2C, and 3.12.2D. The removal area and the manipulator boot and cover are exhausted through vacuum pump No. 2 to area 4A, which is open to the fuel processing cell. The pneumatic clamps on the capsule access chamber door, the high-pressure relief in area 3A, the high-pressure relief in the 40-psig helium header, and the high-pressure relief in the 80-psig access port header are vented directly to the fuel processing cell.

Radiation monitors are provided on transfer line 994 only. These monitors provide signals for control interlocks and for the panel-mounted radiation meters and high-activity annunciator alarm.

The removal valve is operated by a single-phase motor with its motor windings inserted directly in the control circuit as shown in circuit A576, Fig. 3.12.2B. A cam switch opens the motor circuit at 90° intervals of travel of this ball valve, corresponding to the open and closed positions. The operational valve has a pneumatic operator; air is supplied to the operator through solenoid valves HCV-POV-A1 and HCV-POV-A2 for opening and closing the valve. The capsule access port, the capsule cable drive, and the vacuum pumps are operated in the same manner as the fuel sampler-enricher.

The ECI system is shown in Fig. 3.12.2E. The system differs from the sampler-enricher in that wiring is not required for the maintenance valve and the control-grade circuitry does not require the isolation resistor and amplifier.

All the control and annunciator power is fed from the 120-V ac single-phase instrument power panel No. 2, which, in turn, is fed from the reliable (solid state inverter) power bus. Control power for operation of the barrier closures and the capsule cable drive is fed from instrument power panel No. 2 through a permissive switch on main board No. 11. The "on" condition of this switch is indicated by a green light on main board No. 11 and by a white "power on" light on processing sampler panel No. 2. Single-phase power for control and operation of the vacuum pump motors is fed from 120-V ac instrument power panel No. 7. The radiation instruments and ECI are fed from the regulated 120-V ac single-phase instrument power panel No. A3.

The same scheme was used for panel and interconnection wiring as for the sampler-enricher, except that the isolation and protection for safety wiring was not required. The one relay cabinet was mounted on the side of panel No. 1. In this case, the relays are mounted in one cabinet, and the associated terminal blocks are mounted in another cabinet, also on the side of panel No. 1. The motor starters for the vacuum pumps are mounted inside panel No. 3. Only one field wiring junction box is provided at the sampler. Access to apparatus inside the pressurized compartments is gained by using four-pin and eight-pin weld-type receptacles and mineral-insulated cables with weld adapters. The mineral-insulated cables extend from the apparatus inside the sampler to their terminating gland nut assemblies at the field wiring junction box.

### 3.12.3 Coolant Salt Sampler

A schematic diagram of the coolant-salt sampler is shown in Fig. 3.12.3A. The system consists of a transfer tube connecting the coolant-salt pump through two manually operated ball valves to a leak-tight non-shielded dry box on top of the penthouse. The sample

transfer tube passes through the secondary containment barrier in the MSRE. Sampling is accomplished by raising or lowering the capsule while alternately opening and closing barriers.

**3.12.3.1 General instrumentation requirements.** Instrumentation consists of one small control panel, direct-operating switches and gages, and control-grade circuitry to supplement a system of mechanical interlocks. A helium buffer header is provided for the valve seals and a vacuum pump for evacuating the dry box. The key interlock system operates on the principle that a key is used to unlock a device and also to gain access to a key which can be used to unlock the next step in the procedure. An electrical system sounds an alarm if the pressures in the equipment are not suitable for the next step to be undertaken.

Fig. 3.12.3B shows the alarm system, the capsule cable drive motor, and the vacuum pump motor wiring. As can be seen from circuit 350, the system is in the safe or nonalarm condition when the box helium pressure is less than 20 psig, when the buffer helium pressure is greater than 15 psig, and when keys K3, K4, and K6 are locked in. The alarm consists of a bell at the sampler control panel and an annunciator in the main control room. The first operation in the required sequence is to obtain key K1 from its lock switch mounted on main board No. 6 (see circuits 355 and A356). The removal of K1 is indicated by an amber light on main board No. 6. Its removal also causes a bypass interlock (KA356A) to be made up around the buffer helium pressure interlock (PS-C651-B) in the alarm circuit; this permits the opening of buffered seals without giving an alarm. Key K1 can now be inserted in lock switch No. 2 to obtain key K4 or to unlock and open valve V1 to obtain key K2 (see Fig. 3.12.3A). When lock switch No. 2 is unlocked with key K1, key K4 can be removed from lock switch No. 2 and used to unlock the transfer line ball valves V4 and V5. There will be an alarm when switch No. 2 is unlocked if the box helium pressure is not between 4 psig and 6 psig. Unlocking valve V4 with key K4 permits the valve to be manually opened. After valve V4 is opened, key K5 can be operated. Operation of key K5 locks the valve in the open position and releases the key. Similarly, keys K5 and K6 can be used to unlock valve V5 and to lock it in the open position. When valves V4 and V5 are locked in the open position, key K6 can be used to unlock No. 3 lock switch, thus permitting insertion and withdrawal of the capsule by operation of the capsule cable drive. The only other interlocks on the capsule cable drive are the upper and lower limit switches (see circuit 352). The reverse procedure must be followed to close the transfer line ball valves and to recover key K1. To ensure that the capsule has been withdrawn before the transfer line ball valves are closed, there will be an alarm if the capsule is inserted 4 in. or more when key K6 is removed from lock switch No. 3, preparatory to closing valves V4 and V5.

Prior to or following the above sample insertion and withdrawal operations, key K1 may be used to initiate a sequence of operations associated with loading the sample capsule into (or removing the capsule from) the sampler vessel (glove box) and/or evacuation and helium pressurization of the sampler vessel and glove port. The evacuation and pressurization operations are performed to purge oxygen from the glove box and to equalize pressures in the vessel with the coolant pump bowl pressure before opening transfer valves V4 and V5 or with atmospheric pressure before opening removal valve V3. Precautions must also be taken during these operations to prevent the occurrence of excessive differential pressures between the glove box and the glove port, since such differential pressures could result in damage to the glove. To evacuate the glove box and glove port, key K1 is used to unlock valve V1. When valve V1 is opened manually and locked open with key K2, key K2 can be removed and used to unlock valve No. 2. After manually opening valve V2, the system can be evacuated by opening hand valve HV-662-C. Pressure is then adjusted by closing HV-662-C and bleeding helium into the system through hand valve HV-C650-A. The requirement that valve V1 be opened before valve V2 ensures that pressures across the glove will be equalized during evacuation. Following evacuation and pressurization, valve V2 may be locked closed with key K2, and key K2 may be used to unlock No. 1 lock switch. (This operation could have been performed prior to evacuation and pressurization; however, in either case, valve V1 must be locked open before No. 1 lock switch can be unlocked. This condition ensures that the pressure in the glove box can be equalized with the atmosphere before the glove port is opened.) When lock switch No. 1 is unlocked with key K2, the glove port cover can be opened and key 3 can be removed from lock switch No. 1. There will be an alarm when lock switch No. 1 is unlocked if the pressure in the glove box is not between 2 in. Hg vacuum and 1 psig. After key K3 is released from lock switch No. 1, it can be used to unlock valve V3. Manually opening valve V3 permits transfer of the sample capsule from the sample carrier to the glove box or vice versa. The reverse procedure must be followed to release key K1 for use in initiating sample insertion and withdrawal operations.

The procedures described above were abbreviated for the sake of clarity in this discussion. Detailed procedures are given in Sect. 6B of the *Operations Report.*[6]

The coolant-salt sampler system differs from the sampler-enricher system in that it does not penetrate primary containment and in that the activity of the salt sample is very low. Since it does not penetrate primary containment, dual barriers and safety-grade instrumentation are not required. Also, because of the low activity level and reduced containment requirements, lower-quality components with higher permissible leak rates are used, direct manual manipulation of the sample is permitted, and instrumentation associated with radiation monitoring and interlocking to prevent the escape of activity are not required. These considerations, together with the use of the key interlock system, resulted in a great reduction in instrumentation from that required for the sampler-enricher and chemical process sampler systems. In general, the system is designed to meet the requirements for secondary containment. The valving arrangement and interlock system ensure that at least one barrier (consisting of a solid barrier or two closed valves) is intact during all phases of sampler operation. Commercial-grade instrument components are used throughout. Threaded connections and gasketed seals are permitted; however, in some cases, weld-sealed construction and autoclave-type connections were used for purposes of reducing helium outleakage and oxygen inleakage.

In addition to the alarm and interlock circuitry described previously, electrical control circuitry is provided for operation of the vacuum pump and for a cable position indicator lamp. The vacuum pump motor circuit is the conventional start-stop, with a red light indicating when the motor is running. A red light is also provided to indicate when the capsule cable has been withdrawn 18 in. from the pump bowl.

The control power is fed from the 120-V ac single-phase instrument power panel No. 2. Single-phase power, for operation of the vacuum pump motor, is fed from 120-V ac instrument power panel No. 7. Electrical access to apparatus inside the pressurized compartment is gained by using eight-pin weld-type receptacles.

## REFERENCES


1. R. C. Robertson, *MSRE Design and Operations Report, Part I,* ORNL-TM-728, pp. 244–75 (January 1965).

2. *MSR Program Semiannu. Progr. Rep. Feb. 28, 1965,* ORNL-3812, pp. 22, 24, 32–35.

3. R. B. Lindauer, *MSRE Design and Operations Report, Part VII,* ORNL-TM-907, pp. 45–47 (May 1965).

4. *MSRE Instrument Specifications,* ORNL-CF-67-12-14.

5. *MSRE Sampler-Enricher Instrument Applications Tabulation,* ORNL-CF-65-10-63.

6. *MSRE Design and Operations Report, Part VIII, Operating Procedures,* ORNL-TM-908, vol. II, pp. 6B-1 through 6B4-1.


## 3.13 FUEL PROCESSING SYSTEM

### 3.13.1 Introduction

The MSRE fuel processing facility was constructed in a small cell in the reactor building for two purposes: (1) to remove any accumulated oxides in the fuel or flush salt by hydrogen ($H_2$)–hydrogen fluoride (HF) sparging and (2) to recover uranium from the fuel salt by fluorine ($F_2$) sparging. A complete description of both processes and the process equipment is described in ORNL-TM-2578.[1] This section describes the facility's instrumentation and control systems.

### 3.13.2 Process Description

The following is a brief description of the uranium recovery process which will serve to familiarize the reader with the processing system. A simplified flow diagram of the system is shown in Fig. 3.13.1. A more detailed diagram is shown in Figs. 3.13.2 and 3.13.3.[5,6]

The molten salt is forced by helium pressure from one of three fuel drain tanks, FD1, FD2, or FFT, through salt lines 107, 108, or 109, through the fuel salt filter (FSF) in line 110 to the fuel storage tank (FST). The FST and the salt lines leading to the fuel drain tanks are shown in Fig. 3.13.3. The FST and the salt lines are both reactor-grade components and are considered to be a part of the reactor fill and drain system when the reactor is in operation. Freeze valves FV-107, FV-108, FV-109, FV-110, and FV-111 must all be frozen to isolate the FST before processing operations begin.

The uranium recovery process consists essentially of sparging the salt in the fuel storage tank (FST) with fluorine to volatilize the uranium, followed by decontamination of the evolved gas stream with a 750°F sodium fluoride (NaF) bed (SFT) and absorption of the uranium hexafluoride in the gas stream on the 200°F sodium fluoride beds (SFA). The excess fluorine in the stream is then removed by an aqueous solution in the

caustic scrubber (CS). A high-surface-area mist filter (CPF) located downstream of the scrubber removes any particulate matter that the gas stream picks up from the solution in the scrubber. A soda-lime trap (SLT) removes traces of fluorine from the off-gas before it reaches the charcoal traps (CT1 and CT2). The charcoal traps absorb any iodine that was not removed in the caustic scrubber, and the gas leaving the charcoal traps consists only of helium and oxygen that was produced in the caustic scrubber. This gas mixture flows through a flame arrester and then through an absolute filter before being discharged into the containment air system exhaust duct.

### 3.13.3 Design Considerations

Except for the fuel storage tank and the salt-carrying lines connected to it, the components and systems in the fuel processing facility did not have to meet the stringent requirements governing the construction of the reactor primary systems. The radiation exposure in the cells is much lower, the system will not be used more than three or four times, and a secondary containment barrier for lines and vessels containing process fluids was not required. This allowed the use of many conventional materials; for instance, all in-cell conductors have standard polyvinyl chloride (PVC) insulation, standard phenolic thermocouple connectors were used in the cell, and some gaskets made of inorganic materials are also used.

Nevertheless, the process gases used are highly corrosive, and the off-gases from the system can be highly contaminated. Both of these conditions are very dangerous to operating personnel; therefore, considerable effort was expended to obtain a leak-tight system, and, except for the gas supply stations, the entire process is enclosed by the containment air system (see Sect. 3.11).

To obtain a leak-tight system, all joints are made with Heliarc welds, by silver brazing, or with ring-joint flanges, some of which have leak detector connections (see specification No. MSRE-221).[4] Where possible, the lines are connected to process vessels through check valves to prevent contaminated gases from back flowing. All control valves have bellows-type stem seals; manifold valves in lines connecting instrument transmitters to process lines are Hoke, Inc., type HGP which also have bellows stem seals. (See transmitter connection details on ORNL drawing E-NN-F-55463.)[7] Valves with Teflon-packed stem seals are permitted in special cases, but leak tests must be performed to demonstrate that stem leakage is less than $10^{-3}$ cc/sec. All joints in helium and nitrogen supply lines between the control panelboard and process vessels are silver brazed. Screwed joints are permitted at instruments mounted in the panelboard, but these were made up in the shop and leak tested before the instrument was installed in the panel. Where a mechanical joint was required, Hoke, Inc., solder-tube-type fittings were used. A typical solder-tube fitting is shown in Fig. 3.13.4. Variations of this joint design and the instructions for installing them are shown on ORNL drawing D-NN-F-55461.[8]

Two types of process signal transmitters are used in the fuel processing system: the Taylor Instrument Company model 206 (see specification MSRE-225)[4] and the Foxboro Instrument Company model 15A (see specification MSRE-227).[4] Both types operate on the force-balance principle to deliver 3- to 15-psig pneumatic output signals (see Chap. 5 of this report) and, in addition to their performance characteristics, were selected for this application on the basis of leak-tightness and their ability to withstand the corrosive effects of the process fluids, particularly hydrogen and hydrogen fluoride gases. The sensing element in the Taylor instrument is a silver-brazed beryllium-copper double bellows. The silicone-fluid-filled diaphragm-capsule sensing element and all process-wetted parts of the Foxboro instrument are nickel-plated stainless steel. Both elements will withstand process pressures in excess of 100 psig without rupturing.

The instrument air lines are assembled by conventional methods. Joints in tube runs are soldered, and connections to instruments, supply headers, and at bulkheads are made with compression-type tube fittings.

### 3.13.4 Electrical Control Circuits

There are only a few electrical control circuits in the fuel processing system. Elementary diagrams of these circuits are shown in Fig. 3.13.5[9] and ORNL drawing E-NN-E-55477.[10] All of the circuits shown on these two drawings are control grade. The only safety-grade circuit in the fuel processing system is circuit 320, Fig. 4.1.34, which controls block valve ESV-609B in the fuel-salt filter helium purge line 609.

Circuits Nos. A335, 335, 336, and 337 in Fig. 3.13.5 are valve control circuits. The operation of these circuits is discussed in Sect. 3.13.5. Circuits 340, 341, and 342 control lamps that indicate the position of each valve. The switch contacts are operated by the movement of the valve stem. When the valve is completely closed, the green lamp is energized. If the valve opens just slightly, the switch contacts will

operate to deenergize the green lamp and energize the red lamp. The lamps are located near the valve graphic symbols on panelboard CP1 and CP2. The FST vent valve HCV-692A1 (circuit 342) operates two sets of lamps, and the extra set is located on main board MB11 in the main control room.

Annunciator circuits[10] 1016 through 1028 control the 12 annunciator units in two 6-point chassis, XA-4051 and XA-4052. Each chassis is a Tigerman Engineering Company model 440TL Tel-Alarm. The two chassis are identical to those described in Sect. 4.12 and are part of the same system illustrated by Fig. 4.12.6.

The instrument power distribution circuits are also shown on drawing E-NN-E-55477.[10] Power for all instruments as well as for the position indicator lamps shown in Fig. 3.13.5 is provided through circuit breaker 15 in instrument power panel IPP3. The annunciators and valve control circuits, A335, 335, 336, and 337, are powered from instrument panel IPP2 (see Sect. 4.13). The annunciators are connected to breaker 15 and the valve circuits to breaker 17. Both panels are supplied from the reliable ac instrument power system shown in Fig. 4.13.1.

Heater power distribution circuits are shown in ref. 11.

### 3.13.5 Instrumentation and Control Subsystems

**3.13.5.1 Helium supply system.** Fuel processing is achieved by sparging several industrial gases, under pressure, through the salt in the FST. The gas is carried to the tank by two lines, 690 and 608, as shown in Figs. 3.13.2 and 3.13.3. All sparge gases are carried by line 690, which is connected to a dip tube that extends to the bottom of the tank. Gas is forced into the salt at this point and rises through the salt and into the gas space at the top of the tank. From there it is carried by off-gas line 691 to the off-gas system, where it too is processed. Helium gas for purging the space at the top of the tank and for salt transfer operations is applied through line 608. Line 694 is connected between sparge line 690 and the FST gas space. Whenever valve HCV-694A1* opens, the sparge dip tube is bypassed and the pressures in line 690 and the gas space equalize.

The helium supply system for sparging, purging, and salt transfer operations is shown in the upper right-hand portion of Fig. 3.13.2. Helium at 40 psig pressure is delivered from the main cover gas supply through line 530. Line 530 divides at the fuel processing panelboards into three branches: lines 604, 609, and 619. When transferring salt, helium pressure is applied to the FST by opening valve HCV-530A1 and allowing helium to flow into line 608 via line 619. The FST helium supply and vent valves, HCV-530A1 and HCV-692A1, are controlled by manually operated switches in the main control room, and the operation of both valves is subject to the restrictions imposed by control- and safety-grade interlocks in circuits 115 and 120. Since these circuits are described in Sects. 4.2.4.1 and 4.2.4.2, they will not be discussed here. Line 609, which is the purge supply for the fuel-salt filter (FSF), will be discussed in a later paragraph when the FSF instrumentation is described. Line 604 is a distribution header which supplies helium to the lines used for purging and sparging operations.

Pressure regulating valve PCV-604A reduces the pressure in line 604 to 19 psig, which is the maximum needed for process operations. Relief valve PSV-604D prevents the pressure in the distribution header from exceeding 20 psig. Pressure-actuated switch PS-604C opens to actuate annunciator PA-604C on control panel CP1 if the pressure in the header falls below 18 psig. Helium for purging the gas space in the top of the tank is supplied from the header through line 608. The flow is measured by a Foxboro Instrument Company integral-orifice differential pressure transmitter, FE-608A-FT-608A (see Sect. 5.3.2.1). This is a standard Foxboro type 15A transmitter with an integrally mounted manifold containing an interchangeable orifice plate. The assembly transmits a 3- to 15-psig pneumatic signal, proportional to the square root of the rate of flow, to panelboard CP1. The signal operates the receiver-type pressure gage on CP1 to indicate the actual flow rate. Full scale flow rate is 20 standard liters per minute. The same signal is also applied to two pressure-actuated switches, FS-608A1 and -A2. The flow rate through line 608 is adjusted by operating a manual valve on panelboard CP1. The higher flow rates are used during processing operations, but a small purge flow is needed at all times to prevent off-gases from backing up in the line. If the flow ever falls below 4 standard liters per minute, switch contact FS-608A1 opens to actuate annunciator FA-608A on panelboard CP1. If the flow falls below 3.5 standard liters per minute, switch contact FS-608A2 opens to deenergize control circuit 335, in Fig. 3.1.5., which automatically closes valves HCV-690B1 in the fluorine supply line. This will stop the flow of process gas into the tank, the tank pressure

*For a complete description of all instrument components referred to in this chapter, see *MSRE Fuel Processing System Instrument Application Tabulation* and *MSRE Instrument Specification Sheets* (refs. 3 and 4).

will fall to zero, and the possibility of contaminated gas backing up to the high-bay area will be reduced to a minimum.

The two valves in circuit 335 are also energized through two manual switch contacts, HS-690A and HS-PS-A2. HS-690A is located on local panelboard CP2, and HS-PS-A2 is a contact on the fuel process sampler permissive-to-operate switch located in the main control room. The sampler is connected to the gas space in the FST by line 994 and cannot be operated when fuel is being processed (see Sect. 3.12.2). If the permissive switch in the main control room is not in the "off" position, contact HS-PS-A2 will be open and the two valves cannot be opened to start processing operations.

Pressure transmitter PT-608B, manufactured by the Taylor Instrument Company, measures the FST pressure at all times and transmits a proportional 3- to 15-psig signal to operate several components. These are:

1. Two pneumatic pressure recorders, PR-608B1 and PR-608B2. PR-608B1 is one pen on a two-pen recorder located on MB11. The other pen (WR-FST-C1) records FST weight. PR-608B2 is located on local panelboard CP1.
2. One pressure signal modifier, PM-608B1, which converts the 3- to 15-psig input signal to a voltage signal that can be utilized by the computer data logger.
3. Five pressure-actuated switches, PSS-608B1 and -B2, PS-608B1, PS-608B2, and PS-608B3. The first two switches operate relays in the fill and drain circuits 112 and 92 (see Sect. 4.2.4). PS-608B1 opens to actuate annunciator PA-608B1 on panelboard CP1 if the tank pressure exceeds 30 psig. Normally the pressure never gets as high as 30 psig even during salt transfer operations. PS-608B2 opens if the tank pressure exceeds 5 psig, and PS-608B3 opens if the pressure falls below 2 psig. If either switch opens, annunciator PA-608B2 in the main control room is actuated. Pressures in excess of 5 psig are not encountered during normal processing operations.

Helium for the sparging process flows from the 19-psig header 604, through lines 607 and 690, to the bottom of the FST. The flow through line 607 is regulated and measured by a variable-area flowmeter (FI-607A) mounted in panelboard CP1. A precision metering-type needle valve for adjusting the flow rate is built into the body of the meter. The measuring range of the meter is 12 to 120 standard liters of helium per minute. FI-607B, connected in parallel with FI-607A, is a purge-type variable-area flowmeter with a measuring range of 0.05 to 0.85 standard liters of air per hour. A needle valve for adjusting flow rates is also built into the body of this valve. A continuous flow of helium is required in line 607 to prevent the backup of contaminated gases, and this purge flow is provided through FI-607B.

During sparging operations the pressure in line 607 must always be greater than the pressure in line 608 to prevent the cold sparge line 690 from filling with molten salt that would be forced out of the tank if the above condition is not maintained. Pressure differential transmitter PdT-694A provides assurance that the correct differential pressure will always be maintained. When the pressure in line 607 is less than 1 psi greater than the pressure in line 608, the pneumatic signal from the transmitter opens switch contact PdSS-694A1 to deenergize circuit 336. Valve HCV-694A1 opens and the pressures are equalized. Circuit 336 is also energized through the manual switch HS-694A, which is located on panelboard CP1. The normally opened push-button S152 is also mounted on CP1 and is closed when the process operation is started. The push-button contact bypasses the normally open switch contact PdS-694 and energizes HCV-694A2 until the pressure in line 690 builds up to its normal operating value. PdT-694A is also manufactured by the Taylor Instrument Company. It transmits a 3 to 15 psig signal proportional to differential pressure. This signal is connected to two other devices besides pressure switch PdSS-694A1. One is a receiver-type pressure gage PdI-694A which indicates the differential pressure measurement on panelboard CP1, and the other is pressure-actuated switch PdS-694A2. When the differential pressure measurement is less than 2 psi, the switch contact opens and actuates annunciator PdA-694A on panelboard CP1.

Line 610 provides a continuous helium purge to the fuel loading line 111. The rate of flow is indicated on panelboard CP1 by a variable-area-type purge meter FI-610A. The meter has a measuring range of 0.05 to 0.85 standard cubic feet per hour and is identical to FI-607B, which was described previously. Helium lines 602, 603, and 2695 are opened infrequently to purge the process lines after processing or when maintenance is required.

**3.13.5.2 Fluorine supply system.** Before the process operation begins, sparge gas line 690 is connected to one of two gas supply stations depending on which process operation is desired. For the fluorination process, line 690 is connected to the fluorine supply line. For the hydrofluorination process, the connection is to the hydrogen and hydrogen fluoride supply line. The connection is made by reversing the position of a flanged elbow (see Fig. 3.13.6).

Fluorine gas for the sparging operation is supplied from a tank (FT) mounted on a portable trailer as shown in the lower left portion of Fig. 3.13.2. The initial pressure in a full tank is 70 psig. Fluorine is applied to the system when FSV-FT-A1, a remotely operated shutoff valve on the trailer, is opened. Before leaving the trailer the fluorine flows through flow safety switch FSS-FT. Excessive flow rates actuate the switch, and the shutoff valve closes automatically. This prevents the escape of large quantities of fluorine to the surrounding atmosphere, an unlikely event that could result from a ruptured line or process vessel. The 70-psig pressure in the FT is reduced and automatically controlled at a constant 18 psig by pressure control valve PCV-690B1. After leaving the control valve, the fluorine passes through a sodium fluoride trap, which removes condensed hydrogen fluoride, and then enters flow measuring element FE-690D. The pressure control valve PCV-690B1 responds to signals from pressure transmitter PT-690B that is connected to fluorine line 690 at a point just upstream of the flow element. Valve FCV-690D responds automatically to signals generated by FE-690D and controls the rate of flow of fluorine into the FST.

Flow safety shutoff valve FSV-FT-A1 has a remotely controlled pneumatic operator that is connected to the instrument air supply through the three-way solenoid valve FSV-FT-A2. The shutoff valve opens when the solenoid is energized by circuit 337. To open the valve, the operator momentarily closes push button S179A on panelboard CP2, and relay K337 is immediately energized by the flow of current through the "close" push button S178A, push button S179A, and the relay coil. When relay coil K337 energizes, contact K337B closes to energize solenoid valve FSV-FT-A2, and seal-in contact K337A closes to maintain the flow of current when push button S179A is released. The contact operated by flow safety switch FSS-FT-A is normally closed, but if the fluorine flow rate becomes excessive, the switch contact opens, the entire circuit deenergizes, and the safety shutoff valve FSV-FT-A1 closes automatically. Lamp I-337 lights up on panelboard CP2 when circuit 337 is energized. All of the components in circuit 337 are mounted on the trailer as shown in Fig. 3.13.12, except push buttons S178A and S179A and lamp I-337. A duplicate "open" push-button switch HS-FT-2 is also mounted on the trailer.

Valve PCV-690B1 has a Monel body with integral ring-joint flanged connections, a bellows stem seal, and a pneumatically powered operator. The valve is automatically throttled to maintain a constant pressure of 18 psig on the upstream side of flow element FE-690D. The pressure at this point is measured by a Taylor Instrument Company transmitter, PT-690B. The transmitter produces a 3- to 15-psig pneumatic signal proportional to pressures in the range of 0 to 30 psig. This signal is monitored on panelboard CP2 by a Foxboro vertical scale indicator-controller PIC-690B. The output signal from PIC-690B operates the control valve PCV-690B to maintain the desired pressure in the line downstream of the valve. The signal from the pressure transmitter also operates a pressure-actuated switch PS-690B which has two electrical contacts. The contacts open simultaneously when the fluorine pressure exceeds 25 psig. Contact PS-690B2 opens in circuit 335, Fig. 3.13.5, to deenergize solenoid valve PCV-690B2. This vents the spring-loaded operator on control valve PCV-690B1 and allows it to close. Contact PS-690B1 opens to actuate annunciator PA-690B on panelboard CP2.[10]

The flow of fluorine into the FST is controlled at a constant rate by throtteling valve FCV-690D. The construction of this valve is identical to that of PCV-690B1, which was described in the previous paragraph. FE-690D-FT-690D is a Foxboro integral-orifice differential pressure transmitter which measures flows in the range of 0 to 50 standard liters per minute and transmits a 3- to 15-psig pneumatic signal, proportional to the square root of the flow rate, to the Foxboro vertical scale indicator-controller FIC-690D mounted on panelboard CP2. FCV-690D is positioned automatically by the output signal from the controller to maintain the desired flow rate.

A small amount of fluorine carried by line 2691 is also introduced into line 691 at a point between the FST and the sodium fluoride trap. This assures an excess of fluorine in the gas stream after it passes through the tank. The flow through line 2691 is adjusted by a locally mounted hand valve and is measured by another Foxboro integral-orifice differential pressure transmitter FE-2691A-FT-2691A. The pneumatic signal from the transmitter operates pressure indicator FE-2691A, a receiver-type gage mounted on panelboard CP1. The full scale flow rate is 20 standard liters per minute.

**3.13.5.3 Hydrogen and hydrogen fluoride supply system.** After the fluorination process is complete, the reversible elbow in line 690 is connected to the hydrogen ($H_2$) and hydrogen fluoride (HF) supply systems, and the salt is sparged with hydrogen. This is a reduction process which removes certain corrosion products that form when the salt is being fluorinated. The same connection is also used during the oxide

removal process which requires a mixture of hydrogen and hydrogen fluoride gases.

Hydrogen fluoride is supplied from a single 100-lb cylinder that must be heated in order to generate sufficient operating pressure. Heat is applied by partially submerging the cylinder in an open water bath that is sparged with low-pressure steam. The temperature of the bath water is controlled automatically by regulating the flow of steam with a self-contained temperature control valve, TICV-HFC. The valve operator is powered by a filled thermal system, and the temperature sensing bulb is submerged in the water bath. Temperature changes in the water bath cause the valve to throttle so that the bath is maintained within the desired temperature limits. The resulting pressure in the hydrogen fluoride cylinder is measured by a locally mounted Bourdon tube gage PS-696A with an integral limit switch contact PS-696A. The contact is set to open and actuate annunciator PA-696A on panelboard CP2 if the pressure in the cylinder exceeds 22 psig. This pressure corresponds to the maximum allowable cylinder temperature of 125°F. Normal operating pressures range from 15 to 20 psig.

The hydrogen supply consists of several standard high-pressure cylinders connected to a common manifold. The hydrogen supply line, 697, is connected to the manifold through the two-stage pressure regulator PCV-697B. The regulator is set to maintain a constant pressure of 15 psig upstream of flow control valve FCV-697D1 and contains an interstage relief valve that prevents excessive internal pressure buildups. The regulator is also equipped with two gages which indicate inlet and outlet pressures.

The flow from both the hydrogen and hydrogen fluoride supply systems is automatically controlled at a constant rate. The hydrogen control system is made up of flow element FE-697D, flow transmitter FT-697D, indicating controller FIC-697D, three-way solenoid valve PCV-697D2, and flow control valve FCV-697D1. The hydrogen fluoride flow control system consists of components FE-696B, FT-696B, FIC-696B, FCV-696B2, and FCV-696B1. Except for the orifice diameters and the valve size factors ($C_v$), the two control loops are identical. The two orifices are precision fabricated of Monel and are designed with corner pressure taps, a special arrangement for accurately measuring very low gas flows (Fig. 3.13.7).[13] The flow rate through each orifice is proportional to the square root of the pressure drop, which is measured in each case by a Taylor Instrument Company differential pressure transmitter. Each instrument produces a 3- to 15-psig pneumatic signal proportional to the measured differential, and the signal is transmitted to an indicator-controller on panelboard CP2. The indicator-controllers are Foxboro vertical square root scale-type instruments. The 3- to 15-psig signals produced by the controllers position valves FCV-696B and FCV-697D1 to maintain the desired flow rates. Full scale flow in the hydrogen fluoride system is 10 standard liters per minute when the temperature and pressure downstream of the orifice are 180°F and 20 psig. Full scale flow in the hydrogen system is 55.5 standard liters per minute when downstream conditions are 80°F and 13 psig.

The "on-off" action of both valves, FCV-696B and FCV-697D1, is controlled by three-way solenoid valves FCV-696B2 and FCV-697D2. When the two solenoids are energized by circuit A335, Fig. 3.13.5, the control valve operators are connected to the outputs of the automatic flow controllers. When the solenoids are deenergized, the control valve operators are vented to the atmosphere and they close. The three-way switch arrangement in cirucit A335 is a safety precaution. Switch S150 located on panelboard CP2 is used for normal operations. S151 is located in the switchgear room within sight of the hydrogen supply cylinder station. If some part of the system should catch on fire, an observer in the switchgear room can immediately operate the switch to close both valves. Interlock contact KA340A is operated indirectly by the position switch on valve HCV-690A1 in fluorination line 690. Neither the hydrogen nor the hydrogen fluoride flow control valve can be opened unless HCV-690A is open, in which case interlock contact KA340A will be closed. An amber-colored lamp at each manual switch location is lit when the circuit is energized.

The hydrogen fluoride gas is passed through an electric heater located downstream of flow control valve FCV-696B1. Its purpose is to raise the temperature of the gas above 180°F. At this temperature the hydrogen fluoride is monomolecular (molecular weight is 20) and can be metered more accurately. The heater element is manually controlled, but a thermocouple, connected to meter-relay TIS-HFH on panelboard CP2, monitors the heater temperature. If the temperature exceeds the high limit set on the meter, the meter-relay contact opens to actuate annunciator TA-HFH on panelboard CP2. Flow element FE-696C is a Hastings-Raydist Corporation mass flowmeter which is described later in Sect. 3.13.5.5.

**3.13.5.4 Nitrogen and sulfur dioxide supply systems.** The fuel processing system first installed included a fluorine reactor in line 693 between the sodium fluoride absorbers and the caustic scrubber. The pur-

pose of the reactor was to remove excess fluorine from the FST offgas. According to the original design of the disposal system, the excess fluorine was expected to react with sulfur dioxide to form sulfuryl fluoride, $SO_2F_2$, a relatively inert gas that could be safely passed through fiber-glass filters and discharged to the atmosphere. The nitrogen and sulfur dioxide systems supplied the necessary process gas to the fluorine reactor, but it did not operate satisfactorily during tests and was removed from the system. The nitrogen and sulfur dioxide gas supply line 698 was subsequently disconnected from the fuel process system and capped off as shown in the upper left corner of Fig. 3.13.2.

The instrumentation in line 698 is relatively simple. The high cylinder pressure is reduced to 30 psig by pressure regulating valve PCV-698B. The flow is adjusted with a manual throttling valve and measured by a variable-area flowmeter FI-698D. The valve and the meter are both locally mounted at the gas supply station. Two pressure switches, PS-698E2 and PS-698E1, operate annunciator PA-698E on panelboard CP1 in case of high or low pressures.

**3.13.5.5 Sodium fluoride absorbers.** After leaving the sodium fluoride trap, the gas stream passes through the sodium fluoride absorbers, where uranium hexafluoride is removed. The flow rate is monitored by three Hastings-Raydist, Inc., mass flowmeters. Two of the meters, FE-692B and 692C, are installed in the SFA inlet line 692, and the third, FE-693A, is installed in the SFA outlet line 693. The output signal depends only on the mass flow rate and the specific heat of the particular gas and is, therefore, almost insensitive to pressure and temperature changes.

The meters are used in this instance to provide a sensitive indication of the uranium hexafluoride (which has a high heat capacity) concentration in the gas stream. Two detectors with measuring ranges of 0 to 2 and 0 to 10 scfm of air were required in the inlet line to obtain both range and sensitivity. The meter in the outlet line 693 has a range of 0 to 2 scfm of air. The significance of the meter readings in terms of process conditions is explained on pp. 27 and 28 of ref. No. 1.

Five absorber units connected in series as shown in Fig. 3.13.2 are placed in a sealed enclosure located in the high-bay operating area (see Fig. 3.13.5). The enclosure is connected to the fuel processing cell and the containment air system as described in Sect. 3.11. Each absorber is mounted in an insulated can which has a heater and an air cooling coil in the bottom. The heaters are used to heat each absorber unit to about 200°F before the start of uranium hexafluoride absorption. The absorption process is exothermic, and when it begins, the heaters are turned off and the cooling air is turned on. Temperature elements TE-SFA-8 through TE-SFA-12 are thermocouples attached to the bottoms of the cans. These are connected to temperature recorder TR-3905, which indicates the temperature of each heating element. The temperature inside each absorber is measured by a single thermocouple inserted in a well that is built into each unit. Temperature elements TE-SFA-1 through TE-SFA-5 are connected to multipoint recorder TR-3903, where the temperature inside each absorber is recorded.

Cooling air is supplied to each absorber can from a common header which is connected to the 60-psig service air system through solenoid valve HCV-970A. The valve control circuit is interlocked with the SFA enclosure exhaust blower, and the valve cannot be opened unless the blower is running (see Fig. 3.13.5). The blower must be running when the cooling air is turned on in order to maintain a negative pressure in the SFA containment enclosure.

The cooling air lines are purged at all times with a small air flow. This is measured by the purge-type variable-area meter FI-970B, which is connected in parallel with the solenoid valve. The meter is mounted in the pipeline.

**3.13.5.6 Caustic scrubber.** The caustic scrubber is a vessel 84 in. high and 42 in. in diameter, partially filled with a caustic solution. The off-gas from the sodium fluoride absorbers enters the caustic scrubber through line 693 and dip tubes 695A and B. The gas stream is bubbled through the solution, which removes excess fluorine and hydrogen fluoride, and then leaves through off-gas line 628 at the top of the tank. Instruments are provided to measure the liquid level, the pressure, and the temperatures in the tank. Radiation measurements and process sound measurements are also made.

The level measurement is made with a conventional dip-tube bubbler system. The level signal is obtained by measuring the differential between the pressure in the gas space above the liquid and the pressure inside the dip tube. When the tubes are purged with a small gas flow and the density of the liquid remains constant, the differential pressure produced is proportional to the height of the liquid above the bottom of the dip tube. The normal height in the caustic scrubber is about 60 in. LT-CS-B, a Taylor Instrument Company differential pressure instrument, transmits a 3- to 15-psig pneumatic signal proportional to the level to a receiver-type pressure gage on panelboard CP2. FIC-CS-C1 and -C2, also located on CP2, are variable-area-type purge flowmeters used to regulate and monitor the nitrogen purge flows in the dip tubes.

PT-CS-A is a Foxboro Company type 13A differential pressure transmitter with one side of the measuring diaphragm connected to the caustic scrubber off-gas line 628 and the other side vented to cell atmosphere. The instrument is calibrated to measure pressures in the range of 0 to 5 psig and transmit a proportional 3- to 15-psig pneumatic signal to a receiver-type indicating gage on panelboard CP2. The transmitted signal also operates pressure switch PS-CS-A1 to actuate annunciator PA-CS-A, also on CP2, if the pressure in the scrubber exceeds 2 psig.

Process sounds inside the caustic scrubber are detected by ceramic contact microphone $X_{db}$E-CS-E attached to the outside of the tank. The microphone signals are transmitted to audio amplifier $X_{db}$M-CS-E, which drives speaker $X_{db}$M-CS-E2. The amplifier and the speaker are located in a portable cabinet in the operating area. The temperature inside the tank is measured by a thermocouple in a well that is submerged in the liquid contents. The thermocouple is connected to multipoint recorder TR-3901.

**3.13.5.7 Off-gas filters.** The process off-gas leaves the caustic scrubber through line 628 and passes through a mist filter (CPF), a soda-lime trap (SLT) which removes any remaining traces of fluorine, and two charcoal traps (CT1 and CT2), where radioactive iodine is removed, before it is discharged to containment air exhaust duct 940. The pressure in line 628 on the upstream side of CT1 is measured by a Taylor Instrument Company pressure transmitter, PT-CT1-C. A 3- to 15-psig pneumatic signal proportional to pressures in the range of 0 to 3 in. $H_2O$ is transmitted to a receiver-type dial indicator (PI-CT-1C) mounted in panelboard CP1. Excessive pressure buildup at this point in the line is an indication that the charcoal traps are becoming plugged. The connecting line between PT-CT1-C and line 628 is purged continuously with nitrogen to prevent the process gases from backing up into the transmitter. The nitrogen purge supply is obtained from panelboard CP2 through the variable-area-type purge flow meter FIC-CT1-C.

Several thermocouples, some in wells and some attached to the vessel walls, as shown in Fig. 3.13.2, measure the temperatures of the off-gas filters. The thermocouples shown are connected to multipoint temperature recorder 3904.

Before the off-gas stream is discharged to the containment air stack, it must pass through an absolute filter in line 940. The pressure drop across the filter is measured by pressure-differential transmitter PdT-940C, which produces a 3- to 15-psig pneumatic output signal proportional to differentials in the range of 0 to 5 in. $H_2O$. The signal is transmitted to a receiver-gage-type indicator mounted in the bottom of panelboard CP1. The absolute filter and the transmitter are located in the spare cell.[14]

**3.13.5.8 Radiation monitors.** Nine process radiation monitors are used on the fuel processing system. Two types of monitoring channels are used; one is a Geiger-Muller tube which supplies an input signal to an ORNL model Q-1916 logarithmic response gamma radiation monitor, the other is a standard commercial Reuter-Stokes ion chamber which supplies a signal to an E-H Research Laboratories model 202 electrometer. Both monitoring systems are described in ORNL-TM-729, Part IIA.[2]

All but two of the monitors are ion chamber types mounted on the off-gas components described in the previous section. RM-CS-D and RM-FST-I are installed as a precautionary measure. RM-CS-D will detect and indicate neutron multiplication in the unlikely event that uranium hexafluoride accumulates in the caustic scrubber, and RM-FST-E will indicate neutron multiplication in the FST. RM-CPF-A measures the activity of fission products collected in the mist filter. RM-CT1-A and B and RM-CT2-A and -B do the same for charcoal traps CT1 and 2. Monitors RM-CT1-A and -B operate switch contacts which open and actuate annunciator unit 6 on panelboard CP2. Monitors RM-CT1-A and RM-CT1-B are mounted at the top of panelboards CP1 and CP2. Monitors RM-FST-E, RM-CS-D, RM-CPF-A, RM-CT2-A, and RM-CT2-B are mounted in containment air panelboard CAP-2, which is located on the opposite side of the high-bay area from panels CP1 and CP2.

The two Geiger-Mueller-type monitors RE-CP3-A and RE-940-G supply input signals to two of the three model Q-1916 monitors mounted at the bottom of panelboard CP2. RM-CP3-A (see Fig. 3.11.1) indicates the amount of process radioactivity in the instrument transmitter enclosure CP3. RM-940G indicates the amount of activity in containment air exhaust duct 940 at a point downstream from the absolute filter. Limit switches RS-CP3-A and RS-940G also actuate annunciator unit 6 on panelboard CP2 (see circuit 1027).[10]

**3.13.5.9 Thermocouples.** Eighty-two thermocouples, in addition to those on the FST and the fuel-salt filter FSF, are attached to the pipes and vessels in the fuel processing system. Fifty of the couples are connected to readout instruments through a patch panel mounted on the rear of panelboard CP1. The remaining couples are connected directly to four multipoint recorders TR-3901, TR-3902, TR-3903, and TR-3904. The thermocouples are listed by number in the tabulation in ref.

15. The tabulation also lists the patch panel connection point, if any, and the readout device for each thermocouple. The location of each couple on pipelines and vessels is shown in Fig. 3.13.6.[12]

All thermocouples have Chromel-Alumel conductors, magnesium oxide insulation, and $\frac{1}{8}$-in.-diam Inconel sheaths. These are attached by the two methods shown in Fig. 3.13.8. Additional information is shown on ORNL drawing D-NN-F-55466.[16] By one method the thermocouple junction is attached to a pad which is welded to the pipe or vessel wall (see Sect. 6.7 of this report). By the other method the thermocouple is held in a well by a spring-loaded adapter fitting.

**3.13.5.10 Fuel salt filter.** A fuel-salt filter FSF is located in line 110 between the FST and the fuel drain tanks as shown in Fig. 3.13.3. The filter is designed to remove corrosion-product solids from the fluorinated salt before its reuse in the reactor.

The filter housing is a vertical section of 6-in. pipe 7 ft 9 in. long with a ring-joint blank flange cover on the top end. The replaceable filter element, which is supported by a rod attached to the top flange, occupies the lower half of the pipe section. Filtering action takes place when the transfer is from the FST. When the transfer is from the fuel drain tank, the filter element floats and offers very little resistance to the flow of salt. For normal transfer operations the salt level is kept below the baffles and a helium cover gas is maintained in the space above the salt.

Temperatures are monitored by 11 mineral-insulated, Inconel-sheathed thermocouples attached to the outer wall of the filter housing. Nine of these are connected through the main patch panel to readout instruments in the main control room. The other two, located near the top flange, operate temperature interlocks TS-FSF-7A and TS-FSF-9A which open to annunciate high temperatures in the filter gas space and to stop the transfer of salt to the fuel drain tanks if the temperature of the top flange on the filter gets too high.

The temperature interlocks are contacts in two Electra Systems Corporation temperature switch modules (see Sect. 7.15) mounted in auxiliary board AB6. The contacts are connected in control interlock circuits 101 and 102, Fig. 4.1.8. Thermocouple TE-FSF-7A is located below the cover flange of the filter at a point on the housing that is adjacent to the baffles. If the salt level should rise to the baffles during a transfer, the temperature at this point will also rise and open switch contact TS-FSF-7A in circuit 101. Relay K101 deenergizes and opens contact K101A in circuit 115, Fig. 4.1.9, to close the FST helium supply valve, HCV-530A1. This stops the flow of salt into the filter.

Two other contacts, K101D and K101E, on relay K101 also operate in circuits 838 (see Fig. 4.1.52) and 427 (see Fig. 4.1.27). Contact K101D opens circuit 838 to actuate an annunciator unit on main board MB9. Contact K101E closes in circuit 427 to light the high-temperature indicator lamp TA-FSF-7A located in the filter graphic symbol on main board MB10. Normally the pressure of the gas trapped in the top of the filter housing will increase as the salt level rises. This in turn will tend to drive the level back down by forcing more salt through the filter and by reducing the transfer flow rate. If during a transfer the level should continue to rise, because of a leaky flange joint or perhaps faulty check valves in helium line 609, the second temperature switch TS-FSF-9A will open and deenergize circuit 102 in Fig. 4.1.8. Circuit 102 is identical to 101. When relay K102 deenergizes, contact K102A opens and deenergizes circuit 112, and relay contacts K112A and K112C open to deenergize circuits 115 and 120 (see Fig. 4.1.9). This closes FST helium supply valve HCV-530A1 and opens FST vent valve HCV-692A1. This stops the transfer operation, and the salt in the upper part of the filter drains to the FST. Two other contacts, K102D and K102E on relay K102, also operate in circuits 838 and 427. Contact K102D opens circuit 838 to actuate the same annunciator unit on main board MB9. Contact K101E closes in circuit 427 to light the high-temperature indicator lamp TA-FSF-9A, also located in the filter graphic symbol on main board MB10. Circuits 101 and 102 cannot be reenergized unless the temperature switches are closed and reset push buttons S131A and S132A are closed momentarily. These are control-grade interlocks designed to keep the salt level below line 609 and the ring-joint flange. A clean flange joint simplifies the removal and replacement of the filter element. The integrity of primary containment is assured by the mechanical design of the filter housing.

The helium purge supply line 609 assures the presence of a gas cushion in the top of the filter at all times and purges salt line 110 of fuel processing gases that might enter the fuel drain tanks. The supply system shown in Fig. 3.13.2 is designed so that it does not compromise the safety features built into the reactor fill and drain system. These features prevent the accidental filling of the reactor vessel which would result from inadvertent and sudden pressurization of the fuel drain tanks (see Sect. 4.2.4). This is accomplished by limiting the pressure and flow rate that can be applied through line 609. Pressure relief valve PSV-530C opens if the pressure in the main helium supply line 520 exceeds 50 psig. If this pressure is unintentionally applied, the

purge flow rate is restricted to a maximum of 5 standard liters per minute by the capillary-type flow element FE-609C. This rate is only 30% of that permitted by FE-517 in the fuel drain tank helium supply line (see Sect. 3.2). Check valves downstream of FE-609C prevent contaminated gas from backing up into the supply line. The normal operating pressure in line 609 is between 10 and 15 psig, depending on the setting of pressure regulating valve PCV-609A. A special weld-sealed solenoid block valve, ESV-609B (see Sect. 6.20), is installed downstream of PCV-609A. The valve is energized to the open position by safety-grade circuit 320, Fig. 4.1.34. Contacts KB20C and KB21C will open if an emergency drain or reactor fill restriction (see Sect. 4.7.2) is called for, and the solenoid valve will close the block line 609.

The fuel drain demand interlocks KB20A and KB21A in the circuit controlling the FST helium supply valve (see circuit 115, Fig. 4.1.9) can be bypassed on the jumper board. This jumper may be used if necessary during process operations, but its use is not permitted when salt transfers are made.

A Taylor Instrument Company transmitter PT-609D measures the helium pressure in line 609 downstream of the two check valves. A 3- to 15-psig pneumatic signal is transmitted to a Foxboro vertical scale pressure indicator in the main control room on MB10.

### 3.13.6 Equipment Layout

Most of the plant equipment, including instrumentation, is concentrated in three main areas: the fuel processing cells, the operating area, and the gas supply station. An isometric view of all three areas is shown in Fig. 3.13.6.[12]

**3.13.6.1 Processing cells.** Most of the processing equipment is located in the fuel processing cell, which is situated just north of the reactor drain tank cell. This cell contains the fuel storage tank, the sodium fluoride trap, the caustic scrubber, two remotely operated valves (HCV-694A1 and HCV-692A1), three salt freeze valves, and an exhaust blower that is connected to the containment enclosure housing the sodium fluoride absorber. The spare cell to the east of the processing cell contains the remaining components in the off-gas system. These include the mist filter, soda-lime trap, charcoal traps, and the off-gas filter – all of which are located downstream of the caustic scrubber. Signal transmitter PdT-940C, which measures the pressure drop across the off-gas filter, is mounted on the north wall of this cell. ORNL drawings D-NN-F-55467[14] and -55468[17] show plan views of the equipment and instrument piping layout.

Figure 3.13.9 is a view of the processing cell looking from the east toward the west wall. The large vessel in the upper center is the fuel storage tank (FST). The two control valves and some of the instrument piping are attached to the wall at the left. The caustic scrubber (CS) can be seen in the lower right-hand corner. Trays containing heater and other power wiring and the conduits carrying the thermocouple lead wires are clearly visible. The thermocouple lead wires and control conductors leave the cell through a wall penetration in the lower right-hand corner at a point just beneath the instrument panelboards.

**3.13.6.2 Operating area.** The operating area is located on the west side of the fuel processing cell near the west wall of the high-bay area. The instruments and controls needed for data acquisition and routine operations are mounted in two modular-type panelboards, CP1 and CP2, located at the west edge of the processing cell. Annunciators, process radiation monitors, and multipoint temperature recorders occupy the upper one-third of the two panels as shown in Fig. 3.13.10.[18] Except for some additional process radiation monitors mounted in the bottom right-hand corner, the instruments and controls mounted in the lower two-thirds of both panels are arranged in a full graphic display of the process system. An electrical system relay junction box, JB162, and the instrument air supply header are both mounted on the right-hand end of the control panelboards. Figure 3.13.11 shows the panelboard and part of the operating area in a view looking west toward the high-bay wall. The signal transmitter containment enclosure, CP3, is immediately behind the panelboard. The enclosure is actually an extension of the containment wall that is fitted with airtight cover. All signal transmitters connected to process lines and equipment are mounted in the housing.[24] The housing is sealed except for a connection to the processing cell which is exhausted by the containment air system. Any leakage of process fluids from a transmitter will be contained by this system and will eventually be discharged from the containment air stack. The containment enclosure which houses the sodium fluoride absorbers is shown to the right of the panelboards.

Other instrument equipment located in the operational area includes: (1) a portable cabinet containing two additional multipoint temperature recorders and one audio amplifier (see Fig. 3.13.10), (2) portable hydrogen and oxygen monitors, (3) a constant air monitor, and (4) the fuel processing sampler and sampler instrument panelboards (see Sect. 3.12.2).

**3.13.6.3 Gas supply station.** The gas supply station is located outside of the building near the southwest

wall.[12] There is space enough in the area between the switchgear room and the blower house to park two 15,000-liter fluorine tanks (see Fig. 3.13.12) mounted on trailers. The trailers are connected to a manifold on the side of the building. High-pressure bottles containing hydrogen, hydrogen fluoride, nitrogen, and sulfur dioxide are connected to distribution manifolds in cubicles located on the north wall of the blower house. The manifolds are connected to the process system by pipes mounted on the west wall of the building. Instruments for measuring gas temperatures, pressures, and flow rates are also mounted on the building walls in this area. Since the temperature of the hydrogen fluoride gas must be maintained above 180°F to prevent condensation, two of the transmitters, FT-696 and FT-697D, are mounted in steam-heated enclosures. Additional details of the fluorine trailer and the hydrogen fluoride cylinder are shown in ref. 7.

Helium gas for fuel processing is supplied from a 250-psig header in the reactor cover gas supply system (see Fig. 3.5.0). The pressure is reduced to 40 psig by pressure regulating valve PCV-530B in line 530, which extends to two other regulators, PCV-530A and PCV-604A (see Fig. 3.13.2), mounted on the west wall of the high-bay area near panelboards CP1 and CP2.

**3.13.6.4 Interconnections.** There are no safety-grade instruments or electrical interlocks in the fuel processing control system. All wiring and pneumatic tubing is control grade and, for the most part, is installed in a conventional manner and in accordance with the techniques described in Sect. 7 of this report. Standard commercially available wiring and tubing devices are used throughout the system.

Panelboards CP1 and CP2 in the operating area are the central interconnection points for all wires and tubes in the system. Panel-mounted control elements such as relays, push buttons, lamps, instruments, and annunciators are wired to terminal strips CP1-A and CP2-A located inside the panels.[19] Field-mounted elements, such as valve position switches, process-actuated switches, and solenoid valves, located in all three of the main equipment areas are also wired directly to the same two strips.[20] Jumper wires interconnect the terminal points to form the desired circuit arrangements.[9,10] These arrangements will be explained later in this chapter.

Lead wires connected to a majority of the thermocouples in all three areas are brought together and terminated on a 50-point thermocouple patch panel on the rear frame of panelboard CP1.[16] One end of a flexible lead is connected to each instrument in the two panelboards, and the opposite end is connected to a male plug that can be connected to any one of the 50 thermocouples on the patch panel. The remaining thermocouple lead wires are also brought into panelboard CP1, but these are connected directly to two temperature recorders that are mounted in a portable cabinet adjacent to CP2 (see Fig. 3.13.10).

All electrical conductors are run in rigid steel conduits. Thermocouple and other signal lead wires are run in conduits separate from those carrying control and power conductors. One group of conduits, which can be seen in Fig. 3.13.11, leaves the top of the panelboards and runs along the west wall of the high-bay area. These carry conductors connected to devices in the SFA housing and to other devices mounted on the wall.[21] Another group of conduits[21] serves equipment at the gas supply station on the outside of the building. This group leaves panelboards CP1 and CP2 at the bottom through sleeves in the concrete floor at the 852-ft level (high-bay area), emerges on the west wall of the diesel house (DH) at the 840-ft level, and continues along the west side of the building to the gas supply stations.

A third group of conduits[22] also extend from the bottom of the panelboard to two large pull boxes mounted on the outside west wall of the fuel processing cell at the 840-ft level. Three conduits then penetrate the concrete cell wall to connect the two boxes to the inside of the cell. The conduit carrying the thermocouple lead wires terminates at another pull box on the opposite side of the wall. From this point several smaller conduits branch out to distribute the lead wires to the appropriate thermocouples. The other two conduits, carrying control and power conductors from the second box, are connected to conduits that extend along the north wall of the cell. One of these splits into several branches and carries conductors to control elements located in different parts of the cell. The other conduit extends through the east wall of the fuel processing cell and through the spare cell and then joins with the wire trays in the north electric service area. It carries control conductors to the main and auxiliary control rooms via the transmitter room. The fitting in each of the conduit sleeves which penetrate the cell wall is a sealing conduit. After all the conductors were installed, this fitting was filled with a liquid epoxy compound that hardens and seals the opening between the processing cell and the pull box.

The pneumatic tubing lines are mounted on the same racks and follow the same routing as the electrical conduits. One group of tubes[23] connects the panelboard in the high-bay area with the instruments in the transmitter housing (CP3). Another group[7] connects the panelboard to instruments located at the gas supply

station. A third group[14,17] connects the panelboard with components in the two processing cells.

### References


1. R. B. Lindauer, *Processing of the MSRE Flush and Fuel Salts,* ORNL-TM-2578 (August 1969).
2. J. R. Tallackson, *MSRE Design and Operations Report, Part IIA, Nuclear and Process Instrumentation,* ORNL-TM-729, Part IIA (February 1968).
3. P. G. Herndon, *MSRE Fuel Processing System Instrument Application Tabulation,* ORNL-CF-65-9-69, Rev. 1 (not available for external distribution).
4. R. L. Moore, *MSRE Instrument Specifications,* ORNL-CF-67-12-14 (not available for external distribution).
5. ORNL drawing D-AA-B-40514, Chemical Processing System, Instrument Application Diagram.
6. ORNL drawing D-AA-B-40513, Fuel Loading and Storage System, Instrument Application Diagram.
7. ORNL drawing D-NN-F-55463, Chemical Processing System, Instrument Installation at Gas Supply Station.
8. ORNL drawing D-NN-F-55461, Chemical Processing System, Control Panels, Pneumatic Diagrams.
9. ORNL drawing E-NN-E-56416, Chemical Processing System, Maintenance Elementary – Valve Circuits.
10. ORNL drawing E-NN-E-55477, Chemical Processing Facility, Maintenance Elementary, Annunciators and Instrument Power.
11. ORNL drawing E-NN-E-55473, Chemical Processing System, Power Wiring Diagrams.
12. ORNL drawing E-HH-B-40554, Chemical Processing System, Gas Lines – Thermocouple Locations.
13. ORNL drawing D-HH-B-54767, Fuel Processing Facility, Flow Elements FE-608A, FE-690D, FE-696B, and FE-6970 – Assemblies and Details.
14. ORNL drawing D-NN-F-55467, Instrument Installation in Spare Cell.
15. ORNL drawing A-AA-B-40524, Fuel Processing Facility, Thermocouple Tabulation.
16. ORNL drawing D-NN-F-55466, Chemical Processing System, Thermocouple Details.
17. ORNL drawing D-NN-F-55468, Instrument Plan, Fuel Processing Cell.
18. ORNL drawing D-NN-F-55459, Chemical Processing System, Control Panels – Front View.
19. ORNL drawing E-NN-E-55475, Instrument Panel Wiring and Interconnection Diagram.
20. ORNL drawing D-HH-B-57444, Chemical Process System, Interconnection Diagram.
21. ORNL drawing E-NN-E-55472, Chemical Processing System, High-Bay Conduit Plan.
22. ORNL drawing E-NN-E-55471, Chemical Processing System, Thermocouple and Control Conduit Plan.
23. ORNL drawing D-NN-F-55465, Chemical Processing System, Instrumentation – High-Bay Area.
24. ORNL drawing D-NN-F-55462, Chemical Processing System, Transmitter Cubicle Details.


## 3.14 MSRE INSTRUMENT AIR SUPPLY SYSTEMS

### 3.14.1 General

The MSRE instrument air supply system is designed to achieve maximum safety, reliability, and serviceability. Reliability of the system is enhanced through redundancy. Two complete compressor and dryer systems are installed in parallel. Either compressor may be selected as the operating compressor. The other compressor then becomes the standby compressor and comes on line automatically if the main header pressure falls below a preset limit.

The output of the compressor is supplied to a main header (line 9000), which, in turn, supplies five normal air subheaders (9001–9005) directly, and to six "emergency" subheaders (9007–9011 and 9013) through a check valve. Each subheader except the block valve header (9013) is equipped with a filter and pressure reducing station. Additional subheaders carry the air from the main reducing stations to various operating and control areas where it is further reduced in pressure if and as required. Noncritical instruments are supplied by the normal air header, and critical instruments are supplied by the emergency air headers. Critical instruments are those which must continue to operate if pressure is lost in the main instrument air header. In general, these are the instruments required for a safe and orderly shutdown of the reactor; however, some additional data instrumentation is included in this category for record purposes.

The emergency "air" is obtained from a system of nitrogen cylinders, which are capable of supplying the load on the emergency headers for a period of 30 min. Instrument air may also be obtained from the service air compressor by opening valves V-9130 and V-9132 in a line interconnecting the service and instrument air systems. These valves are normally closed and the systems operated independently. Service air is used for applications such as supplying air to freeze valves in the

coolant and fuel transfer lines and operating pneumatic tools and is, therefore, less reliable than instrument air.

A "normal" nitrogen supply system supplies nitrogen requirements for operation of temperature scanner switches and reactor cell sump bubblers, as well as for operation of the chemical plant caustic scrubber and reactor cell pressurization.

All instrument air supply system power supply sources are automatically switched to the emergency diesel-generated source on loss of the primary power source.

A complete single-line diagram of the system is shown in Figs. 3.14.1 and 3.14.2.

### 3.14.2 Components

**3.14.2.1 Suction air filter.** Each compressor is supplied with a suction air filter of the replaceable cartridge type.

**3.14.2.2 Compressors and dryers.** Compressors are of the reciprocating type with drive motors operating from 440-V, three-phase, 60-cycle power. Motors are sized so that no portion of the service factor is used. Each compressor is capable of supplying 100 scfm of completely oil-free air at 80 psig. The compressors are vertical, water-cooled-type machines with Teflon rings. Protection against damage resulting from low oil pressure and high outlet air and cooling water temperatures is provided by switches PS-AC1A and 1B, TS-AC1B and 2B, and TS-AC1A and 2A, respectively. Throttling valves TV-880C and D control cooling water outlet temperature by throttling inlet water in response to the outlet cooling water temperature measured by bulb-type sensors installed in thermowells TW-880C and D. Solenoid valves ECV-880A and B shut off cooling water flow when the compressor is shut down. Dial indicators TIAC-1F, 2F, 1G, and 2F provide local indication of cooling water outlet temperature. Pressure switches PS-AC1D and 2D operate solenoid valves PCV-AC1E and 2E, which, in turn, operate unloading valves on the compressor. Pressure gages AC1K and 2K provide a means of reading pressure in the lines supplying the unloading valves.

The operating compressor can run at no load or full load and is automatically unloaded when the pressure reaches 85 psig. It is reloaded again when the pressure drops to 75 psig.

If for any reason the pressure falls to 70 psig, the spare compressor is automatically loaded and remains loaded until the system pressure is 85 psig. The spare compressor will continue to operate in parallel with the operating compressor until it is manually shut down. Coincident with the startup of the spare compressor, an audible and visual alarm is actuated in the main control room.

The system controls are arranged so that either compressor may be considered the operating compressor or the spare compressor. Any shutdown of either compressor by any means other than manual results in an audible and visual alarm in the main control room.

For further discussion of compressor controls see Sect. 4.9.2.

**3.14.2.3 After cooler.** Each compressor is provided with an aftercooler. Each aftercooler has an automatic drain trap which is equipped with a self-cleaning filter. No instrumentation is installed on the aftercooler.

**3.14.2.4 Separator.** Each compressor is equipped with a separator at its outlet to remove all particulate matter and free water before inlet to the dryers. The separators are mounted and piped on a common base plate with the dryers and are equipped with automatic traps. Dial indicators TI-AC1H and 2H provide local indication of air temperature at the separator outlet.

**3.14.2.5 Receivers.** The system receivers are sized to provide air at the maximum consumption rate for 5 min in the event of air system failure. During this period the pressure would drop from 80 psig to 40 psig. The receivers are equipped with safety valves and drains with automatic traps. Receivers were designed, fabricated, inspected, and stamped in accordance with the ASME code for unfired pressure vessels, latest revision. Local indication of receiver tank pressures is provided by pressure gages PI-R1 and R2. Dial indicators TI-AC1J and 2J provide local indication of receiver tank temperature.

**3.14.2.6 Dryers** The dryers are capable of delivering 100 scfm of dry air with a dew point less than -55°C, with 100% water-saturated inlet air at 100°F. Recycling of each drying and filtering system is fully automatic. The filter and drying systems are designed so that each one is in service for not less than 3 min before reactivation is necessary. The dryers are of a heatless type.

The dryers are designed so that the maximum pressure drop is 5 psi. Each dryer is equipped with a flow indicator to show the rate of purge air usage and a pressure gage to indicate tower pressure.

A mechanical filter is installed downstream from the dryer to remove any absorbent carry-over that may occur. The inlet to the dryers is also filtered.

**3.14.2.7 Main header.** Provisions were made for monitoring the flow and moisture content of air from the dryers to the main headers. Rotameter FI-9000A

monitors the flow. Moisture content is detected by $X_m$E-9000B and indicated locally on $X_m$I-9000B. Main header pressure is indicated locally by pressure gage PI-9000 and monitored by pressure switches PS-9000-1 and 2. When main header pressure is low, PS-9000-1 operates a common annunciator in the main control room via Rochester alarm module PA-9000 and initiates startup of the standby compressor.

**3.14.2.8 Emergency nitrogen system.** The emergency nitrogen system is automatically actuated if the system pressure drops to 65 psig and holds the pressure at 65 psig by pressure regulation. Actuation of the emergency nitrogen system is accomplished by an audible and visual alarm.

The nitrogen is supplied by two banks of nitrogen cylinders. Either bank may be valved off for service or repair. Pressure gages PI-9006-1 and 2 provide local indication of the pressure of each bank. Pressure switches PS-9006-1 and 2 actuate annunciators PA-9006-1 and 2 in the main control room and provide early and final warning of low nitrogen supply pressure.

The nitrogen supply pressure is reduced to 65 psig by a conventional pneumatically actuated throttling valve (PCV-9006-1), which is controlled by pressure controller PIC-9006-1. This instrument has proportional action and a Bourdon-type sensing element. Supply for the controller is obtained from the nitrogen cylinders through a pressure reducing system consisting of pressure regulators PCV-9006-2 and 3 and relief valves PV-9006-1 and 2. Pressure gage PI-9006-3 provides a local indication required for adjustment of PCV-9006-2. Pressure gage PI-9006-4 provides a local indication of the controlled nitrogen pressure. Rotameter FI-9006 provides a local indication of flow from the nitrogen system to the instrument air headers. Since the controller is set for 65 psig, the controller holds valve PCV-9006-1 closed as long as the compressors maintain the pressure above this valve, and there should be no flow through FI-9006. (Nitrogen flow under these conditions indicates a leaky valve.) If the header pressure drops below 65 psig, the controller opens valve PCV-9006-1 and admits nitrogen to the emergency air headers as required to maintain the pressure. Flow of nitrogen to the normal air headers is prevented by a check valve.

**3.14.2.9 Main piping.** The main air system piping materials are as follows: sizes 2 in. and larger seamless steel, sched 40, ASTM-A106, grade A or A53 seamless. All main piping is of all-welded construction. Valves are 150-lb globe type, with steel bodies, nickel alloy screwed-in seat, bolted bonnet, and rising handwheel. Valves are connected into the system by weld-end connections. In some cases the use of 304 stainless steel, sched 5 seamless, or 347 stainless, seam-welded sched 5, pipe was authorized.

**3.14.2.10 Reducing stations.** Each pressure reducing station consists of a parallel arrangement of two filters, Fulflow model BR-7A, and two regulators, Moore Products Company model 40-30, 42-50, or 40-200. Detailed information on the regulators mentioned above can be found in MSRE instrument specifications MSRE-157, 158, and 159. Block valves are provided so that either parallel filter-regulator combination can be isolated from the system to facilitate maintenance. Each reducing station is provided with a pressure gage to indicate both the supply pressure and the reduced output pressure. These gages are specified in MSRE instrument specification MSRE-160 or MSRE-161, depending on the pressure range required. A relief valve is located in the reduced pressure line at each reducing station to protect the instrumentation served from excessively high pressure. The relief valves are Circle Seal Products Company type 559B-4M valves as specified in MSRE instrument specification MSRE-162. A low-pressure switch, instrument specification MSRE-154, is provided to give an audible and visual alarm annunciation to the operators if the reduced pressure drops too low.

Schematic representations of the pressure reducing station appear in Fig. 3.14.1.

**3.14.2.11 Low pressure lines.** All air system low-pressure lines smaller than 1 1/2 in. are fabricated of ASTM B75-52 copper. All connections in these lines are made with compression-type fittings. Construction details and the layout of control panel air headers are shown in Figs. 3.14.3 and 3.14.4.

**3.14.2.12 Construction.** Insofar as possible, the entire instrument air system piping is of all-welded construction. To allow for future additions of field-mounted instruments, a ½-in. valved connection was provided every 20 ft on the instrument air main.

The maximum use of pipe bends was employed in order to minimize the number of fittings and welds required. Also, the longest standard lengths of pipe were used in a further effort to reduce the number of fittings.

### 3.14.3 Cleaning

All components and materials of the air system were thoroughly cleaned before use. Cleaning methods and storage precautions were in full accord with the standard established procedures for MSRE materials.

### 3.14.4 Test and Inspection of the System

Test and inspection of the system during construction was made the responsibility of one individual. During installation every effort was made to exclude all foreign material for the pipe or equipment. Before final inspection and tests, all air mains and branches were checked with a flow test to ensure that no obstructions were present in the system. Any restricted lines were cleared prior to additional testing.

After installation, all piping was pressure tested to 125 psi with clean, dry air. The soap bubble test was used to check all connections for leaks. After all detected leaks were repaired, the system was again pressurized to 125 psi and held at this pressure for 30 min. All leaks detected during this period were repaired.

## 3.15 OFF-GAS SAMPLER

An instrument applications drawing for the off-gas sampler is shown in Fig. 3.15.0. Figure 3.15.1 is a simplified schematic of the sampler system. This sampler provides a means for on-line determination of the presence and level of hydrocarbons and other impurities in the reactor off-gas stream and for collecting a concentrated sample of gases, other than hydrocarbons, in a sample bomb which can be removed to a hot cell for further analysis. The reactor off-gas is sampled by taking a side stream of 100 cc/min from the reactor off-gas stream at a point upstream of the main charcoal beds and either upstream or downstream of the particle filter. Except for a delay time of approximately 40 min, samples taken above the particle trap are identical to the pump bowl exit gas. By sampling upstream and downstream of the filter and using the hydrocarbon detector in the sampler, the relative effectiveness of the particle filter may be evaluated. The simplified diagram shown in Fig. 3.15.1 assumes the sample is taken below the particle filter. In this mode of operation, the gas stream flows to the sampler through line 537 and returns through sampler line 538. When the sample point is taken above the particle filter, the gas stream flows to the sampler through reactor off-gas lines 533 and 561 and sampler line 538 and returns through sampler line 537 (see Fig. 3.6.0). In this mode of operation, the entrance and exit points on the sampler are reversed. This can be corrected by using sampler lines 4 and 5 and valves V1A, V2E, V2C, and V2F to reverse the connections of the sampler internals to sample lines 537 and 538. Within the sampler the gas may flow through several paths. The path followed is determined by the position of hand-operated valves in the various lines. During sampling operations one of two paths is generally used. The first is through a copper oxide scrubber, a conductivity cell with an associated absorber ($A_{tc}E$-1), a second conductivity cell ($A_{tc}E$-2), and then through a flowmeter (FE-2B) to the return line. The second path is the same as the first except that the gas discharging from the first conductivity cell is diverted through a liquid-nitrogen-cooled molecular sieve instead of passing through the second conductivity cell. Other paths are possible and are used for various purposes.

In both modes of operation, hydrocarbons in the gas stream are oxidized to carbon dioxide and water in the copper oxide scrubber. The carbon dioxide and water are removed from the stream by a charcoal absorber. The difference in the thermal conductivities of the stream, before and after the charcoal absorber, is related to the hydrocarbon content of the off-gas sample stream and is measured by the conductivity cell. The output of this cell, which is displayed on panel-mounted recorder $A_{TC}R$-1, may be calibrated in terms of percent hydrocarbon content. Part of the calibration procedure requires that the same gas flow through both the reference and measuring legs of the cell. This is accomplished by bypassing the gas around the charcoal absorber through valve VIE. The basic principles of operation of the conductivity cell are explained in Sect. 3.15.4.3.

In the first mode of operation, the gas leaving the first conductivity cell passes through the second cell ($A_{TC}E$-2), where its thermal conductivity is compared to that of a reference gas (helium) which flows from a gas cylinder through the cell reference leg. The output of this cell, which can be made proportional to the gross contaminants in the gas stream minus the hydrocarbons, is displayed on a panel-mounted recorder ($A_{TC}R$-2). This cell is calibrated by first purging contaminated gases from the system and then alternately flowing two standard gases through the measuring leg of the cell. One of these gases is used in setting the cell zero, and the other is used in setting the span. The standard gases, supplied from two separate gas cylinders, are special mixes prepared for the application. The instrumentation of the gas supply system will be discussed in Sect. 3.15.3.

In the second mode of operation, the gas leaving the first conductivity cell is diverted through a liquid-nitrogen-cooled molecular sieve rather than passing through the second conductivity cell. In this mode, most of the gases contaminating the helium carrier gas are liquefied and collected in the chilled molecular sieve. The helium carrier gas is not liquefied and passes

through the sieve. The reason for passing the gas stream through the scrubber, first conductivity cell, and charcoal absorber before entering the sieve is to remove hydrocarbon contaminants which might foul the sieve.

The sample trapped in the sieve may later be transferred to a sample bottle by:

1. isolating the sieve,
2. pumping a vacuum above the sieve,
3. connecting the sieve to the sample transfer bottle while continuing the vacuum pumping,
4. isolating the sieve and transfer bottle from the vacuum pump,
5. boiling off the liquid nitrogen,
6. heating the sieve,
7. isolating the transfer bottle.

### 3.15.1 System Layout

The primary components of the off-gas sampler are located inside a containment housing installed below floor level in a pipe trench south of the vent house. The arrangement of components in the containment enclosure is shown in Fig. 3.15.2. All valving in the system is physically located at the top of the containment enclosure with the valve handles extending through seal glands into the enclosure. All other equipment in the enclosure is arranged for vertical access after the valving complex is removed. A removable grating allows access to the valves. Sampler operations are controlled by manipulation of these valves and by instrumentation located on a panelboard in the south end of the vent house. Figure 3.15.3 shows the layout of this panelboard. Since all major sampling operations are carried out at the sampler, all readout of information is presented at the sampler panels; however, occurrence of an alarm condition at the sampler will actuate an annunciator in the main control room, and some information is transmitted to the computer data logger. Also, a sample permissive switch is located in the main control room. This switch, which is connected in the block valve circuits, prevents operation of the sampler without knowledge of the reactor operators.

### 3.15.2 Containment

Since fission gases flow directly from the reactor to and through the off-gas sampler, most of the primary components and lines in the sampler are an integral part of primary containment and, for this reason, are located in a containment enclosure at the south end of the vent house. Also, since some components of the sampler do not meet the requirements for primary containment system components, solenoid block valves are installed in the inlet and outlet lines which connect the sampler to the reactor system. Two valves are installed in series in each line. These valves (ESV-537A and B and ESV-538A and B) automatically close and isolate the sampler from the reactor system in the event of high pressure in the reactor containment cell, high pressure in the fuel pump bowl, or high air activity in the sampler enclosure. High reactor cell pressure is indicative of a rupture of the primary containment and the occurrence of the maximum credible accident. High fuel pump bowl pressure indicates that conditions exist that could result in a rupture of the sampler primary containment. High sampler air activity indicates that a rupture of the sampler primary containment has occurred. Closure of the block valves resulting from high sampler air activity (and the accompanying alarm) also provide protection to the sampler operator against the occurrence of high background radiation resulting from small leaks in the sampler. Sampler air activity is detected by two G-M-tube-type radiation detectors (RE-54A and B), which monitor two separate and independent air samples collected from and returned to the sampler enclosure. The isolation block valves and associated detecting instruments and control circuitry were designed in accordance with the criteria and standards used in the design of the reactor safety protective circuits (see Sects. 1.2.3, Part IA, and 4.8.2). The solenoid block valves are weld-sealed types described in Sect. 6.20. Signals from the radiation detectors are input to two ORNL model Q-1916 radiation monitors (see Sect. 2.10, Part IA) located on the sampler panel. In addition to providing interlock contacts for the containment safety circuit, these monitors provide contacts RS-54-A1 and B1, which operate a common annunicator (RA-54A) at the sampler panel, an indication of radiation level at the sampler panel, and a millivolt level signal proportional to radiation which is input to the data logger. A pair of small fans in a separate enclosure circulates air from the enclosure to the disconnect boxes, past the detectors, and then back to the enclosure, thus providing more rapid detection of system leaks. The fans also maintain a slight vacuum in the system, which, under normal conditions, ensures that enclosure leakage will be inward. The sampler and detector enclosure are vented to the stack. The detectors are shielded from the sampler so that they detect activity in the recirculating air only. Vane-type flow switches FS54C and D monitor the recirculating air flow and operate an annunciator (FA-54C) when flow is low.

All instrumentation components which form a part of the primary containment system meet or exceed the primary containment requirements for 50 psig operating pressure and 75 psig burst pressure.

All electrical penetrations to the sampler are made either by means of MI cable with hermetically sealed connectors for high level signals, or by means of epoxy-sealed bell housings with six pairs of thermocouples inside a ¼-in. copper tube similar to the seal used at the reactor cell junction boxes (see Figs. 6.7.20 and 6.7.21).

### 3.15.3 Sampler Instrumentation

Instrumentation is provided for on-line thermal conductivity analysis; for measurements of flows, pressures, and temperatures required for proper operation of and interpretation of data from the conductivity analyzers; for control of temperature of a molecular sieve trap and of the level of a liquid-nitrogen bath in which the molecular sieve is immersed; for detection and annunciation of undesirable operating conditions; and to prevent the occurrence of hazardous conditions.

**3.15.3.1 Thermal conductivity.** The conductivity sensors ($A_{TC}E$-1 and -2) are Gow-Mac model TR-111A temperature-regulated thermal conductivity cells. The conductivity cell is basically a temperature-regulated metallic block with four separate cavities in which exposed electrically heated filaments are installed. Two of these cavities connect with the passage through which the reference gas passes, and two connect with the sample gas passage. The filaments are arranged electrically in a Wheatstone bridge with the filaments exposed to the reference gas in one pair of opposite legs of the bridge and the two exposed to the sample gas in the remaining opposite legs. A preset regulated current is passed through the bridge to heat the filaments. The thermal conductivity of the gas surrounding the filaments determines the rate of cooling and therefore the temperature of the filaments. When a sample gas having a thermal conductivity different from that of the reference gas is passed through the cell, the two filaments in the sample cavity are cooled if the conductivity of the sample gas is higher than that of the reference gas and warmed if it is lower. In either case the resistance of the filaments, which is a function of temperature, changes, the bridge becomes unbalanced, and a millivolt level signal proportional to the difference in the conductivities of the reference and sample gases is produced. The signals from the two conductivity cells are input to a dual-channel recorder ($A_{TC}E1/2$) on the sampler panel.

Excitation current for each cell is supplied from a separate power supply. The power supplies are located on the sampler panel and have provisions for adjusting the excitation current, zero, and sensitivity (span) of the cells. By means of these adjustments the recorder can be calibrated to read directly in terms of percent impurity in the sample gas. Since the zero adjustment provided in the power supply affected the filament temperatures and proved to be difficult to adjust, a second (fine) zero adjustment was provided in the recorder.

The temperature of the cell block is controlled by means of a Thermoswitch and heater on the block (see Sect. 3.15.4).

Three cylinders supply gas to the conductivity cells. One cylinder, containing pure helium, is used for reference gas for the second conductivity cell ($A_{TC}E$-2). This gas is also used to purge out the system. Two pressure requlators reduce the cylinder pressure to 10 to 30 psig. The first (PV-61A) reduces the pressure below 125 psig. The inlet and outlet pressures of this regulator are indicated locally on gages PI-61A1 and A2. A second regulator (PV-63A) reduces the pressure to the desired operating point. This regulator is mounted on the sampler panel for the convenience of the operator. Pressure gages PI-61C and PI-63C indicate the pressure upstream and downstream of PV-63A and are mounted on the sampler panel beside the regulator. Pressure switches PS-61B1 and B2 and PS-63B1 and B2 monitor these pressures and initiate an alarm at the sampler panel and in the main control room if they are too high or too low. The flow of reference gas to conductivity cell $A_{TC}E$-2 is controlled by a panel-mounted micrometer-type adjustable valve and indicated on the panel by rotameter FI-70A. Backflow from the sampler to the gas system is prevented by a check valve. Since the reference gas discharge from the conductivity cell is vented to the stack, only one check valve was required in this line.

The other two gas cylinders contain standard sample gases used for calibrating both conductivity cells. The gas pressure in these cylinders is reduced below 125 psig by regulators PV-65A and PV-65B. These regulators are equipped with integrally mounted gages which indicate the inlet and outlet pressures locally. A second regulator (PV-64A) reduces the standard gas pressure to the desired operating point. This regulator is also equipped with integral gages which indicate the inlet and outlet pressures locally. Since only one cylinder is used at a time, the second-stage regulator is common to both cylinders. Pressure switches PS-64C1 and C2 and PS-65B1 and B2 monitor the regulator outlet pressures

and initiate an alarm at the sampler panel and in the main control room if these pressures are too high or too low. A panel-mounted valve and a rotameter (FI-80A), similar to those used for the reference gas, control and indicate the flow of standard gas to the system. Two check valves are installed in the line between rotameter FI-80A and the sampler system to prevent backflow and possible escape of highly radioactive fission gases during sampling operations. As a further precaution, a manual block valve installed in this line is opened only when standard gas flow is required.

**3.15.3.2 Pressure.** Four pressure measurements are made in the off-gas sampler. The pressures at the inlet of the copper oxide scrubber and at the discharge of the molecular sieve are measured by strain-gage-type absolute pressure transducers PE-1A and PE-11A. The output signals from these transducers are recorded at the sampler panel by dual-channel recorder PR1A/11A. Excitation current for the strain gage transducers is supplied by a pair of 5-V power supplies mounted in the recorder. Backset switches PS1A and 11A in this recorder initiate an alarm at the sampler panel and in the main control room when either pressure is high.

The pressure at the vacuum pump suction is measured by a 0- to 1000-$\mu$ range Hastings vacuum gage and is indicated on the sampler panel by indicator PI-40A.

The pressure at the discharge of the vacuum pump is monitored by pressure switch PS-41A, which initiates an alarm at the sampler panel and in the control room when the discharge pressure is high.

**3.15.3.3 Level.** The level of liquid nitrogen in the molecular sieve container is sensed by a Cryogenics, Inc., model 100L dual-point level probe which also controls the level by operation of solenoid valve LCV-50A (see Sect. 3.15.4). The probe is basically a gas-filled temperature sensor connected to a pressure switch in the control unit by a capillary. The fill gas is nitrogen. When the probe is immersed, the nitrogen fill gas condenses and reduces pressure in the probe. When the level drops, nitrogen in the probe evaporates, and the resultant pressure increase in the probe operates the switch. An indicator lamp on the control unit at the sampler panel indicates whether the level is above or below a preselected point. The solenoid valve controls flow of liquid nitrogen from a supply tank located outside sampler containment. The solenoid valve is located at the tank. Backflow in the liquid nitrogen supply line is prevented by two check valves.

A spark-plug-type electrical conductivity level probe LE-OGS operates a magnetic-amplifier-type switch and initiates an alarm at the sampler panel and in the main control room if water leaks into the enclosure from the copper oxide scrubber cooling water line or from outside the containment.

**3.15.3.4 Flow.** A Hastings mass flow meter, model 1F 100X, with a range of 0 to 200 cc/min measures gas flow in line No. 2. This flowmeter (FE2B) consists of an electrically heated tube and an arrangement of thermocouples which measure the differential temperature resulting from the cooling effect of gases passing through the tube. The output signal is a dc voltage proportional to the mass flow and specific heat of the gas. This signal is almost insensitive to changes in gas pressure and temperature, and wide variations in the composition of the gas produce only small differences in calibration. For this reason, the impurities in the helium gas stream have a negligible effect on the accuracy of the flow measurement. Heater power for the element is supplied and controlled by a power supply ($FIX_p$-2B) located on the sampler panel. The output signal is converted to a 10- to 15-mA signal by emf-to-current converter FM-2B and used to operate recorder FR-2B. The converter and recorder are located in a common case on the sampler panel. The flow is also indicated on a front panel meter on the power supply.

**3.15.3.5 Temperature.** Except for the bimetallic thermostats used to control the block heaters on the thermal conductivity cells, all sampler temperatures are sensed by $\frac{1}{8}$-in.-OD mineral-insulated, Inconel-sheathed Chromel-Alumel thermocouples terminated in individual quick disconnects inside the containment enclosure. All lead wires from the disconnects are routed to the sampler panel. Ten of the sixteen thermocouples installed are input to multipoint temperature recorder TR-3803, and three are installed spares. One thermocouple (TE-ABS-A) operates a contact-meter-type indicator-controller (TI/TS-ABS-A) which controls the heaters on the charcoal absorber and indirectly (through the control circuit) operates an annunicator (TA-COS-A) on the sampler panel. Another thermocouple (TE-COS-A) operates a similar indicator-controller (TIC-COS-A) which has two contact switches (TS-COSA1 and A2). One of these switches controls the heaters on the copper oxide scrubber and indirectly (through the control circuits) initiates a high-temperature alarm. The second switch initiates a low-temperature alarm. A common temperature annunciator serves both the charcoal absorber and the copper oxide scrubber.

Thermocouple TE MS-A operates recorder TR-MS-A. This recorder has four backset switches (TS-MS-A2B, A3B, A4A, and A4B) which are used by the control circuit to control the heaters which evaporate liquid nitrogen from the molecular sieve container and heat

the sieve (see Sect. 3.15.4). Another switch (TS-MS-A1B) initiates an alarm at the sampler panel and in the main control room when the sieve temperature is too high.

### 3.15.4 Sampler Control

Figure 3.15.4 shows the circuits which control the heaters, blowers, vacuum pump, and molecular sieve liquid nitrogen level in the sampler system. The supply voltage to all circuits is 110 V ac. The molecular sieve and cold trap heaters and the vacuum pump, which are high-current loads, are supplied from the TVA bus through instrument power panel No. 7. The rest of the circuits are supplied from the reliable power bus through instrument power panel No. 3 (see Sect. 4.13).

**3.15.4.1 Copper oxide scrubber heater.** Circuit 1220 provides over-temperature protection for the copper oxide scrubbers. Relay 1220 has contacts in series with the scrubber heaters and must be energized to apply power to the heaters. This relay is normally held energized by the flow of current through "stop" contact S172A, high-temperature contact TS-COS-A2, and relay-operated seal contact K1220A. High scrubber temperature causes contact TS-COS-A2 to open and deenergize the relay, thus cutting off the heaters. When the relay deenergizes, seal contact K1220A opens and keeps the relay deenergized until the circuit is reset. Momentary closure of "reset" contact S172B will energize the relay and restore the circuit to operating condition after the scrubber temperature has decreased sufficiently to close contact TS-COS-A2. S172A and S172B are contacts on a manually operated spring-loaded rotary switch located on the sampler panel. Power is applied to the scrubber heaters through a manually operated circuit breaker (S173) and a Variac, both of which are located on the sampler panel (see circuit 1222). Lamps I-1220A and 1222A indicate the conditions of circuits 1220 and 1222 at the panel. The heater current is monitored by panel-mounted ammeter $E_i$I-COS-D.

Similar circuits control the heaters on the charcoal absorber.

**3.15.4.2 Molecular sieve nitrogen level.** The level of liquid nitrogen in the molecular sieve container is controlled by circuit 1223. Most of this circuit is in the Cryogenics control unit (LIC-50A). This circuit controls a solenoid (LCV-50A) in the liquid nitrogen supply line and has provisions for either manual or automatic operation. When the selector switch is in the "manual" position the solenoid and relay No. 1 are continuously energized, the amber "filling" lamp is lit, and the green "satisfactory" lamp will be lit until the upper contact on level switch LS-50A opens. In this condition, filling will continue until the switch is turned to either the "off" or the "auto" position. When the switch is in the "auto" position, filling will continue until the liquid nitrogen level rises above the upper probe contact. At this point, the solenoid and relay are deenergized, filling stops, the "filling" lamp goes out, and the "satisfactory" lamp comes on. The system stays in this condition until the lower probe contact is opened due to loss of nitrogen level, at which time the solenoid and relay are again energized and the cycle starts anew. A seal contact on relay 1 bypasses the lower probe contact as soon as the relay is energized. This provides a dead band action which ensures that the level will cycle slowly between the upper and lower limits rather than cycling at a faster rate around the lower limit.

**3.15.4.3 Conductivity cell block heaters.** Circuits 1213 and 1214 control the block heaters on the conductivity cells. Manually operated circuit breakers (S-166 and S-167), located on the sampler panel, allow the heaters to be turned on or off. When the switches are closed, panel lamps (I-1213A and I-1214A) are turned on and the heaters are controlled by the cell thermostat switch (TS-$A_{TC}$E1 and E2). Panel lamps I-1213B and I-1214B indicate whether the thermostat has turned the heaters on or off.

**3.15.4.4 Recirculating air blower.** Circuits 1216 and 1217 control the blowers which recirculate air in the containment and radiation detector enclosures. The blowers are connected directly across the line when panel-mounted circuit breakers S-169 and S-170 are closed. Panel lamps I-1216A and I-1217A indicate whether the breakers are open or closed.

**3.15.4.5 Molecular sieve heaters.** Circuit 1219 controls a heater on the molecular sieve and another in the liquid nitrogen bath surrounding the sieve. Three switches on the molecular sieve temperature recorder (TR-MS-A) control the heaters. Power is applied to the circuits and heaters through manually operated circuit breakers located on the sampler panel. The heaters are needed only for transferring the sample collected in the sieve to the transfer bottle and are turned off at all other times. When liquid nitrogen is in the bath and the circuit breakers are closed, switch TS-MS-A4B will be closed, relay 3 will be energized, the lower (cold trap) heater will be turned on, and the nitrogen will be evaporated from the bath. After the nitrogen has evaporated, the temperature will rise. When the temperature rises above 100°F, contact TS-MS-A4B opens and contact TS-MS-A4A closes. This action deenergizes relay No. 3 and turns off the lower heaters and, since

contact TS-MS-A2B and TS-MS-A3B are closed at this time, energizes relays 1 and 2 and turns on the upper heater. If the Variac which supplies the heater voltage is properly set, the temperature of the sieve will continue to rise until the temperature rises above 600°F and contact TS-MS-A3B opens. The temperature of the sieve will then be cycled around 600°F by the on-off control action of contact TS-MS-A3B and relay No. 2. If for some reason this control action fails and the sieve temperature rises to 700°F, contact TS-MS-A2B will open and cut off the heater through the action of relay No. 1. The Variac is located on the sampler panel and is adjusted to a position which gives good control and also limits the maximum heater power to a value which would not result in excessive sieve temperature should the control fail. Two panel-mounted ammeters monitor the current to the heaters.

**3.15.4.6 Vacuum pump.** Circuit 1215 controls the vacuum pump. Power is applied to the pump through a panel-mounted breaker (S-168). A panel-mounted lamp (I-1215A indicates when this breaker is closed.

### 3.15.5 Annunciator Circuits

The annunciators used are the Tel-Alarm model TLPG relay units mounted six to a panel above the sampler panel. These units operate from normally closed field contacts and utilize a common alarm, acknowledge, and reset circuit. A relay, in parallel with the buzzer, serves as a common repeater and operates an annunciator in the main control room.

Annunciator RA-54A is a common alarm for the two radiation detectors. High activity sensed by either detector initiates an alarm.

Annunciator LA-OGS is operated from the spark-plug-type level probe in the containment enclosure. High water level in the enclosure initiates an alarm.

Annunciator FS-54C is a common low-flow alarm operated by vane-type flow switches located in the discharge of each of the blowers used to recirculate air in the containment enclosure. Low flow on either unit initiates an alarm.

Annunciator TS-MS-A is operated from a backset switch in the molecular sieve temperature recorder. High molecular sieve temperature initiates an alarm.

Annunciator PA-65C is operated from pressure switches in the high-pressure header from the standard sample gas cylinders. High or low pressure initiates an alarm.

Annunciator PA-64B is operated from pressure switches in the low-pressure header from the standard sample gas cylinders. High or low pressure initiates an alarm.

Annunciator TA-COS-A is operated from the contact meter switches used to control the heaters on the copper oxide scrubber. The low alarm is operated directly by the contact meter. The high alarm is operated by a contact on control circuit relay 1220 which is operated by the high-temperature contact on the meter. Either high or low temperature initiates an alarm. This annunciator is also operated by relay 1224, which is, in turn, operated by the contact meter which controls the temperature of the charcoal absorber. In this case only high temperature initiates an alarm.

Annunciator PA-41A is operated from a pressure switch in the discharge of the vacuum pump. High pressure at this point initiates an alarm.

Annunciator PA-61B is operated from pressure switches in the reference helium high-pressure header. Either high or low pressure initiates an alarm.

Annunciator PA-63B is operated from pressure switches in the reference helium low-pressure header. Either high or low pressure initiates an alarm.

Annunciator PA-1A is operated from backset switches in the pressure recorder (one switch operated from each signal). High pressure on either of these signals initiates an alarm.

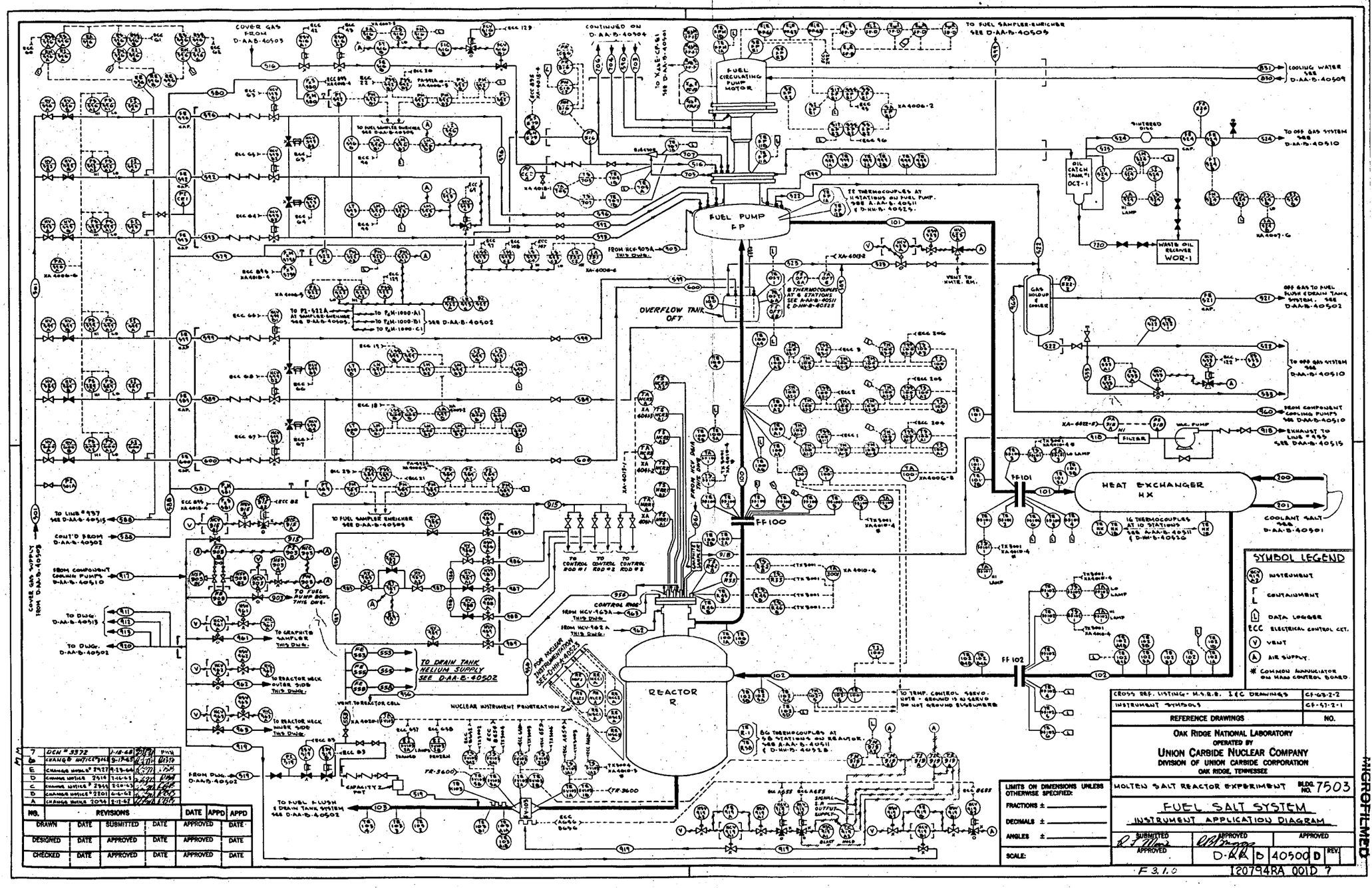


Fig. 3.1.0. Fuel salt system, instrument application diagram.

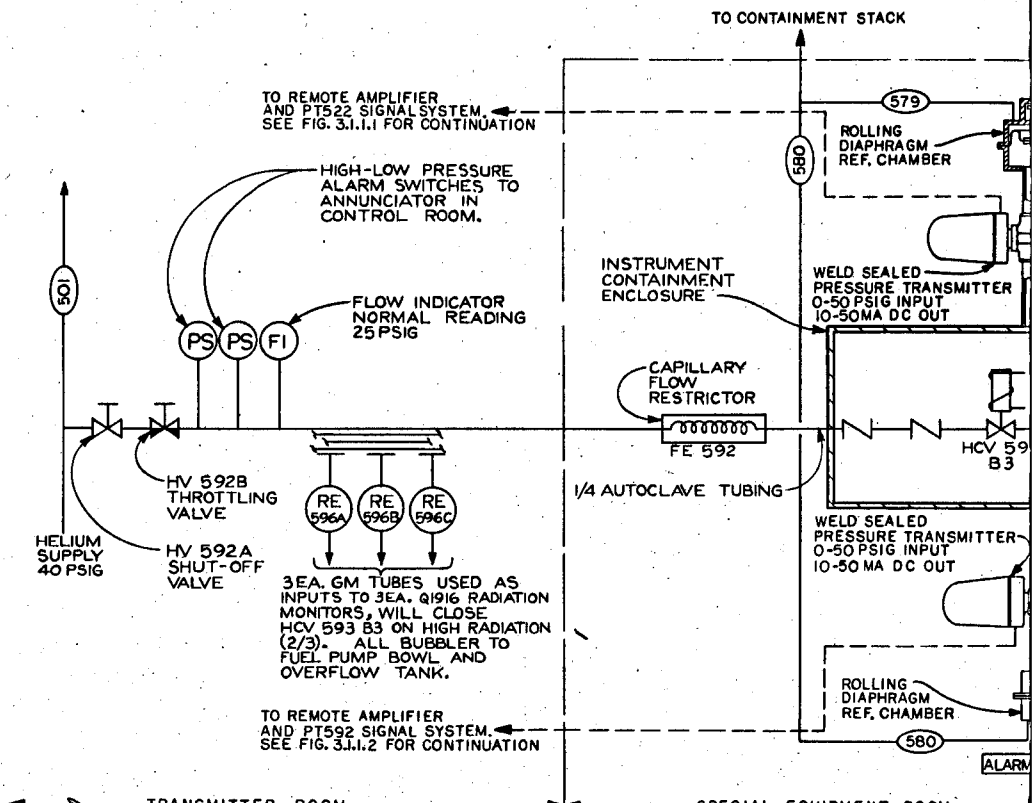


**Fig. 3.1.1.0. PT-522, PT-592 process ti**

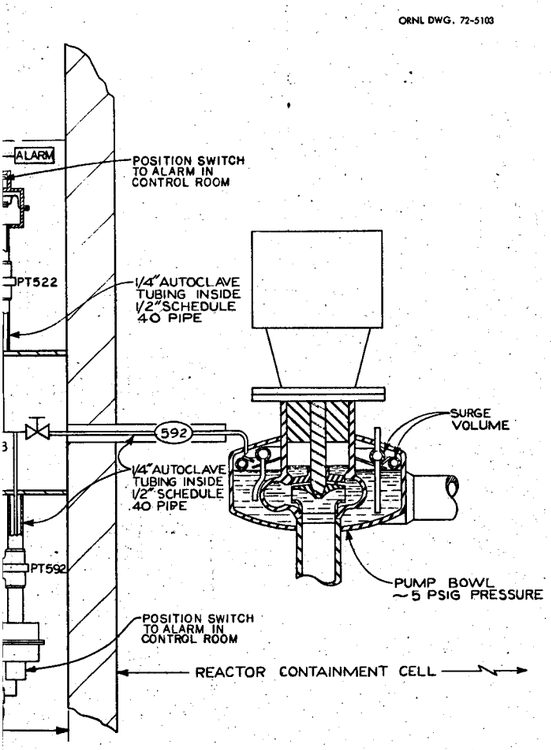


-in.

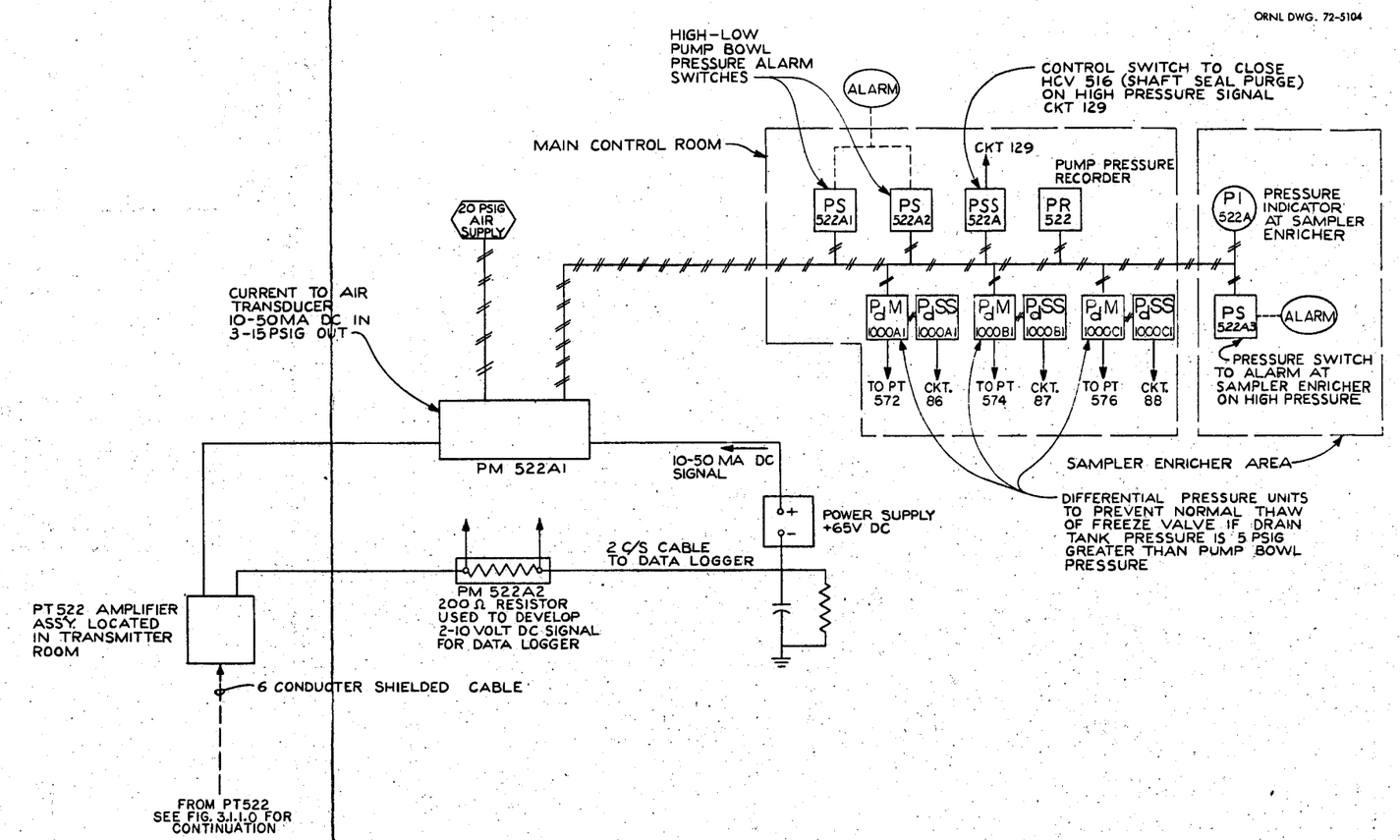


**Fig. 3.1.1.1. PT-522 signal system.**

ORNL DWG. 72-5105

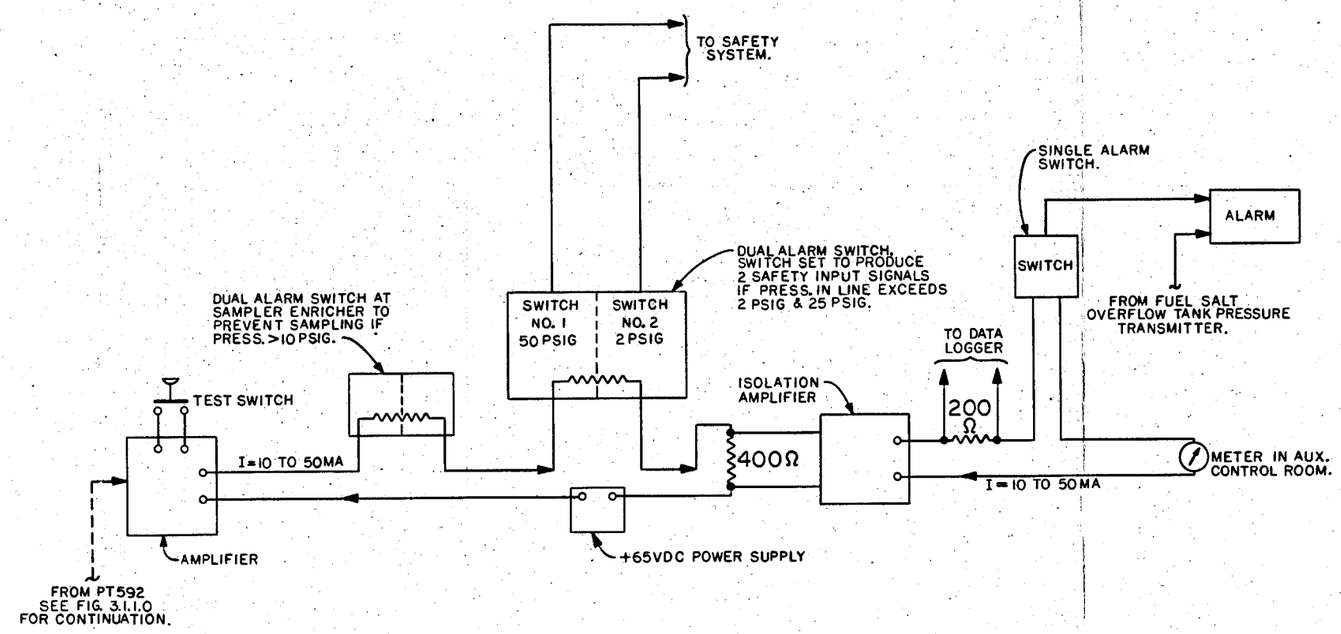


Fig. 3.1.1.2. PT-592 signal system.

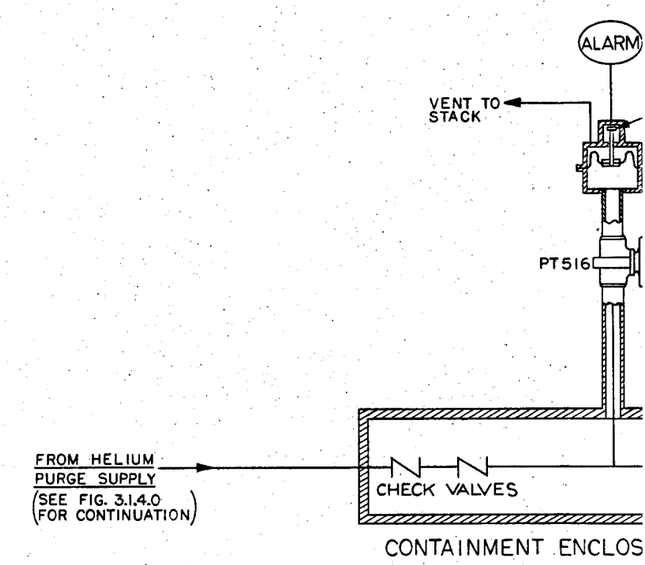


Fig. 3.1.1.3.

ORNL DWG. 72-5106

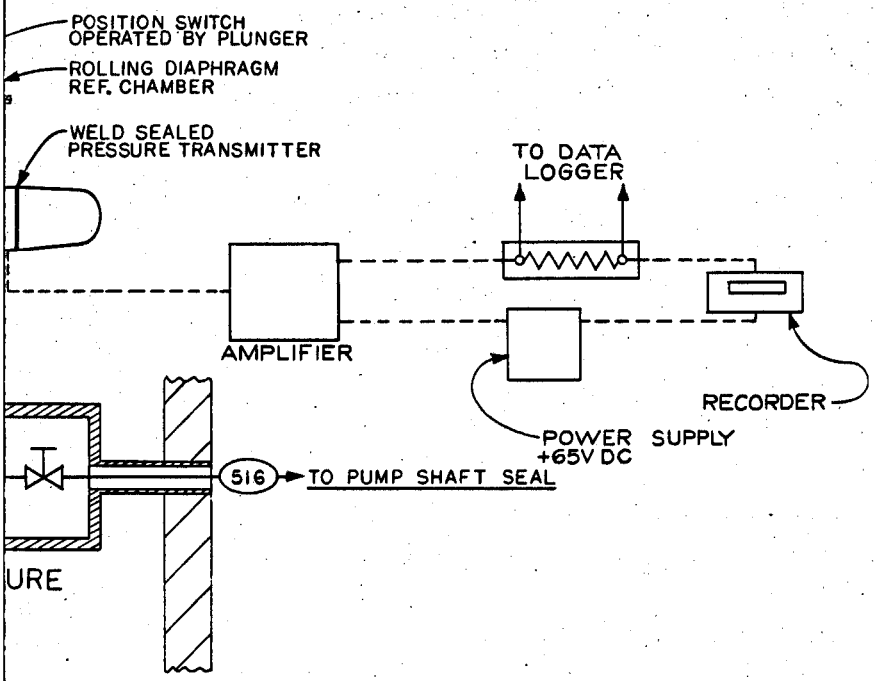


**PT-516 signal system.**

ORNL DWG. 72-5107

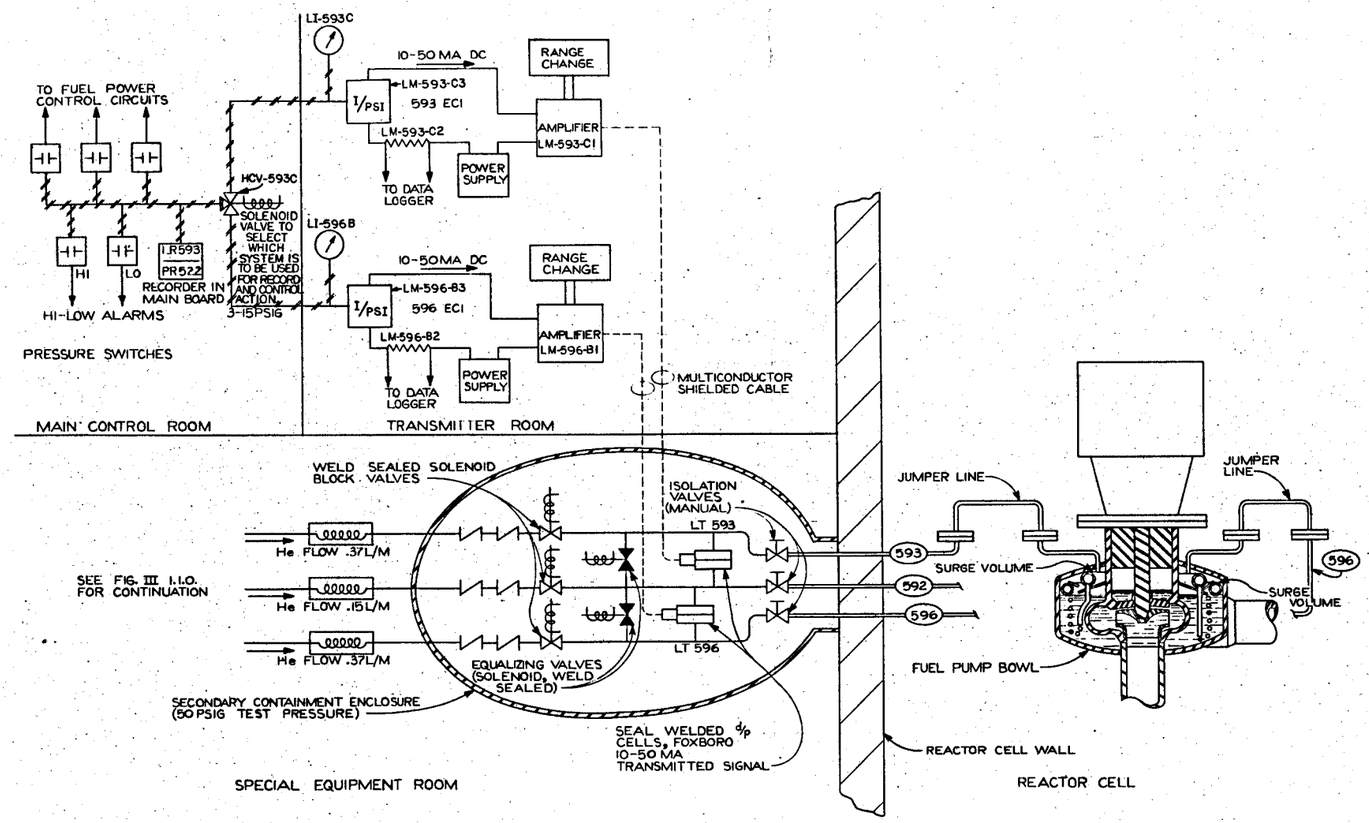


**Fig. 3.1.2.0. Pump bowl level system.**

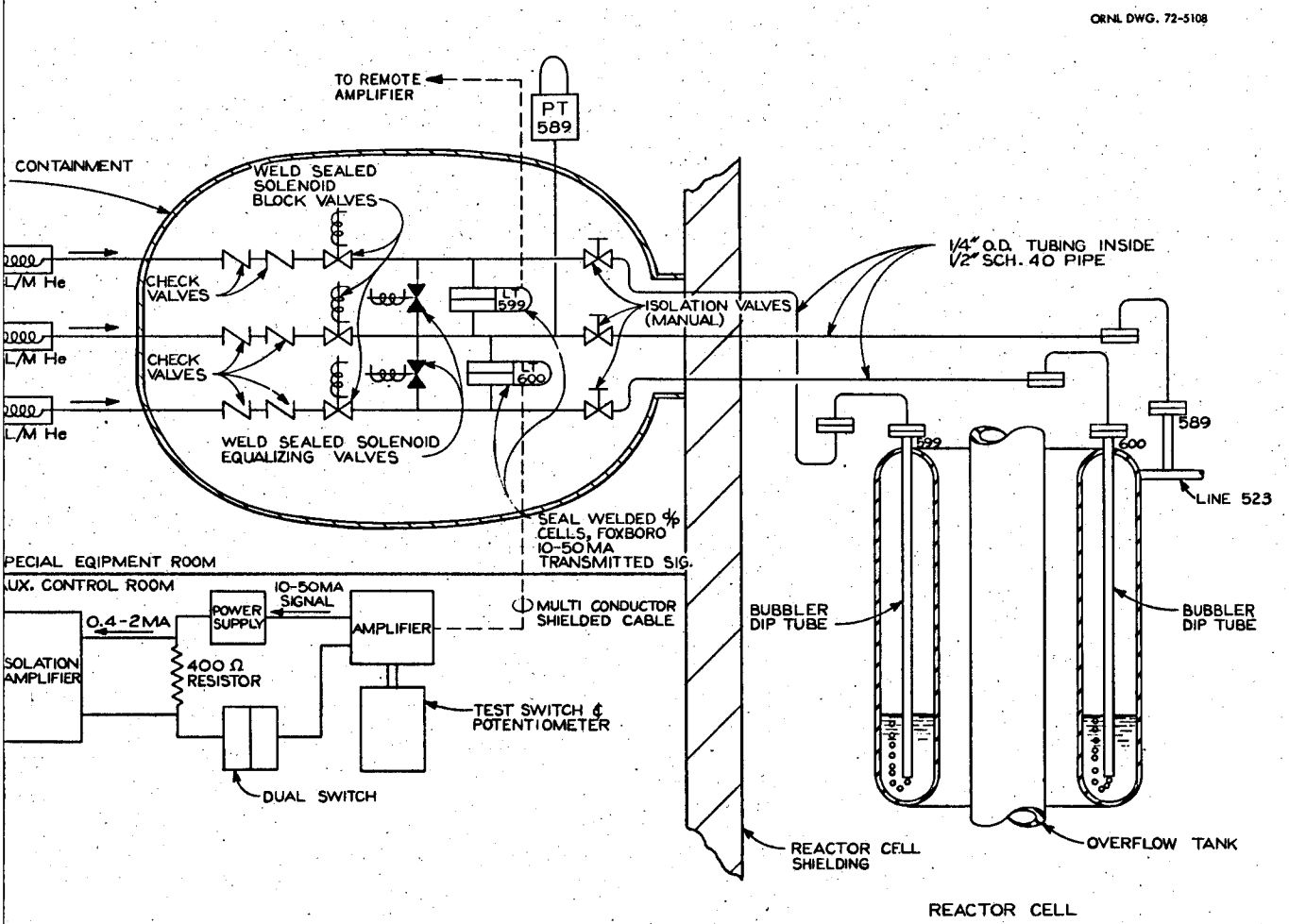


**Fig. 3.1.2.1. Overflow tank level system.**

ORNL DWG. 72-5109

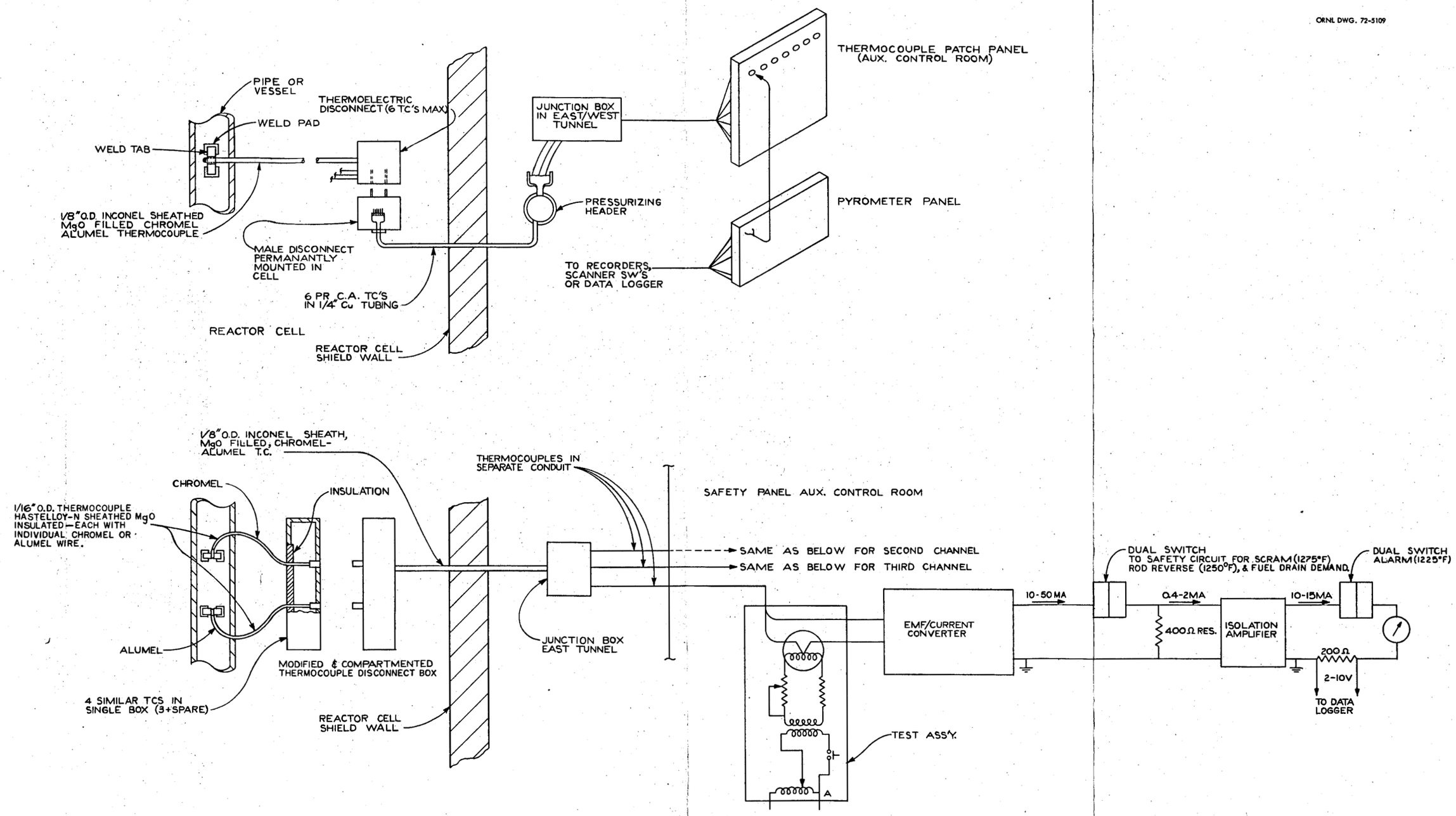


Fig. 3.1.3.1. Typical safety-grade thermocouple system.

ORNL DWG. 72-5110

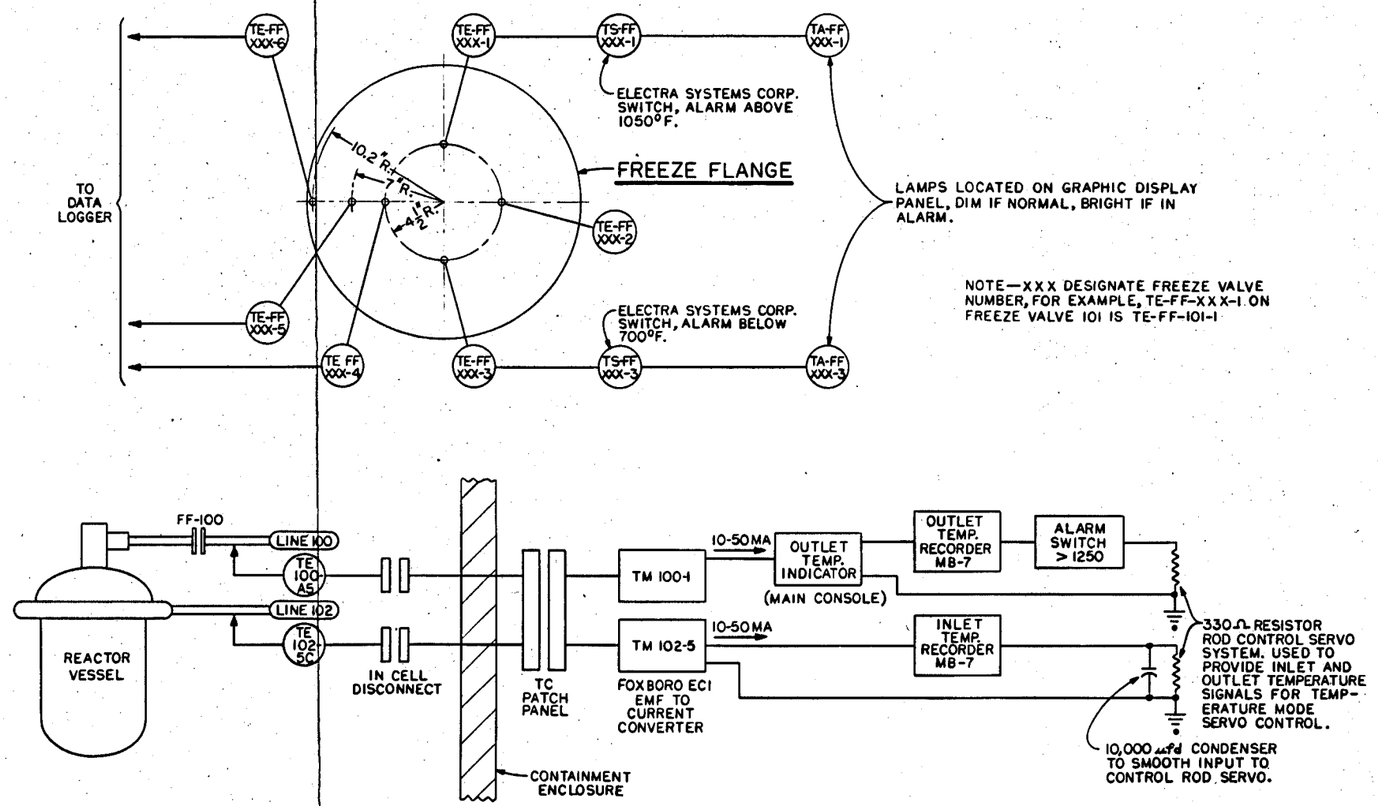


**Fig. 3.1.3.3. Servo input system.**

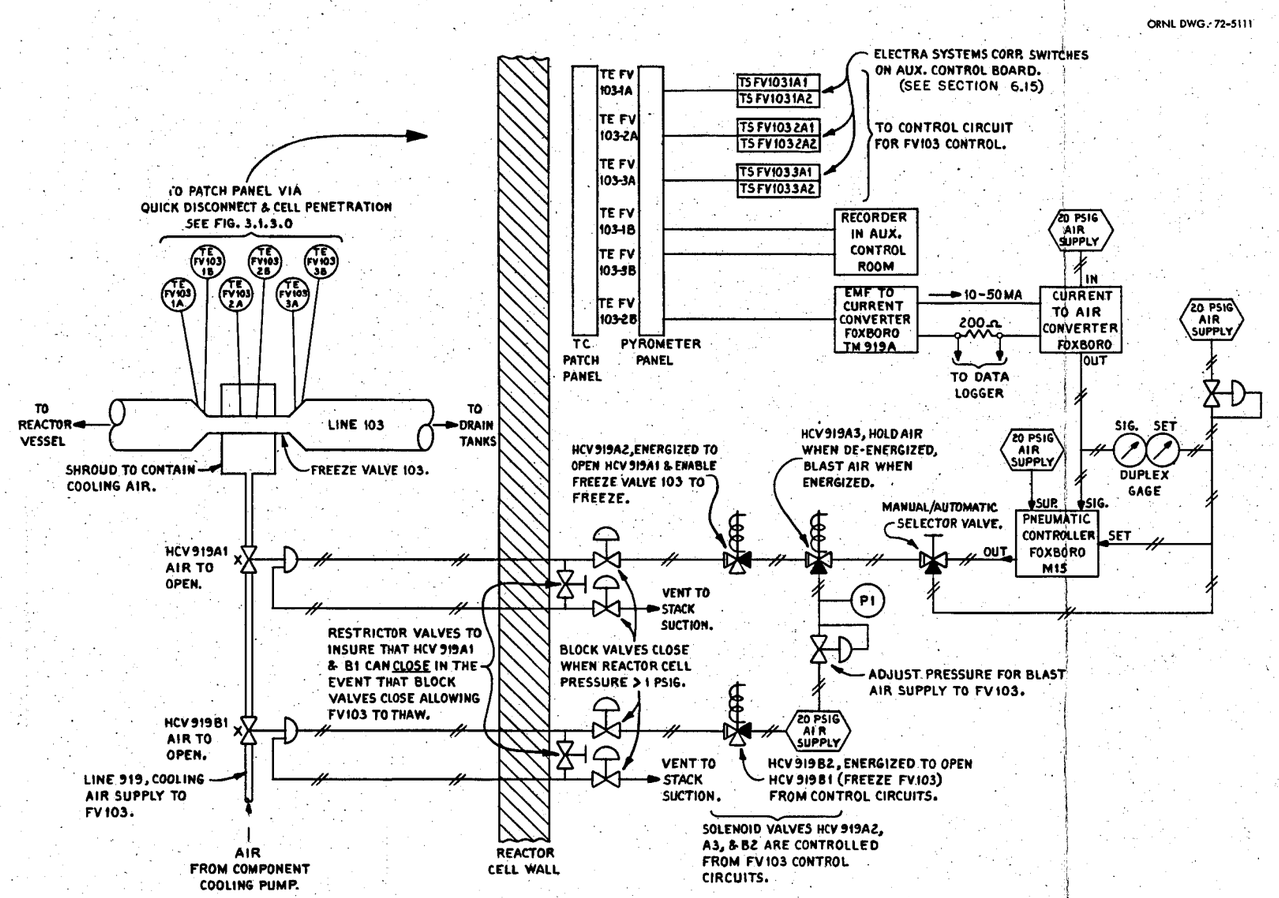


Fig. 3.1.3.4. Freeze valve control.

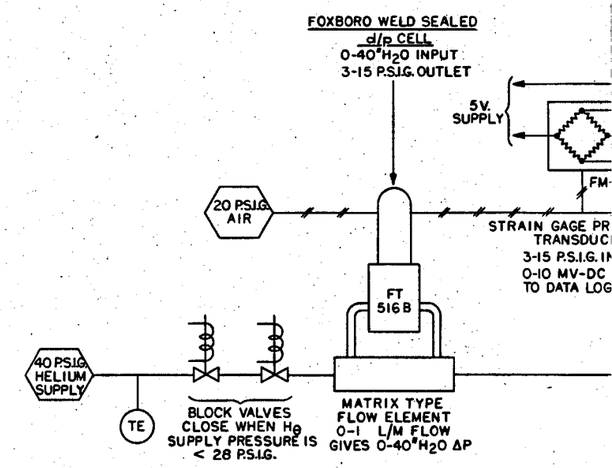


Fig.

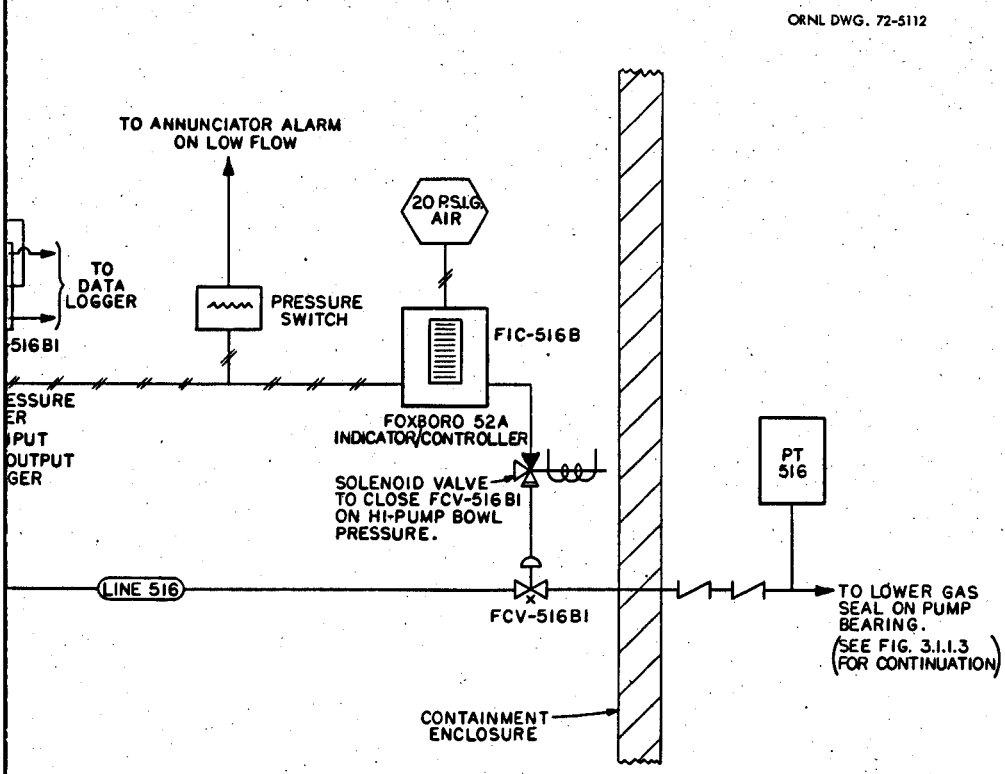


3.1.4.0. FE-516 helum purge.

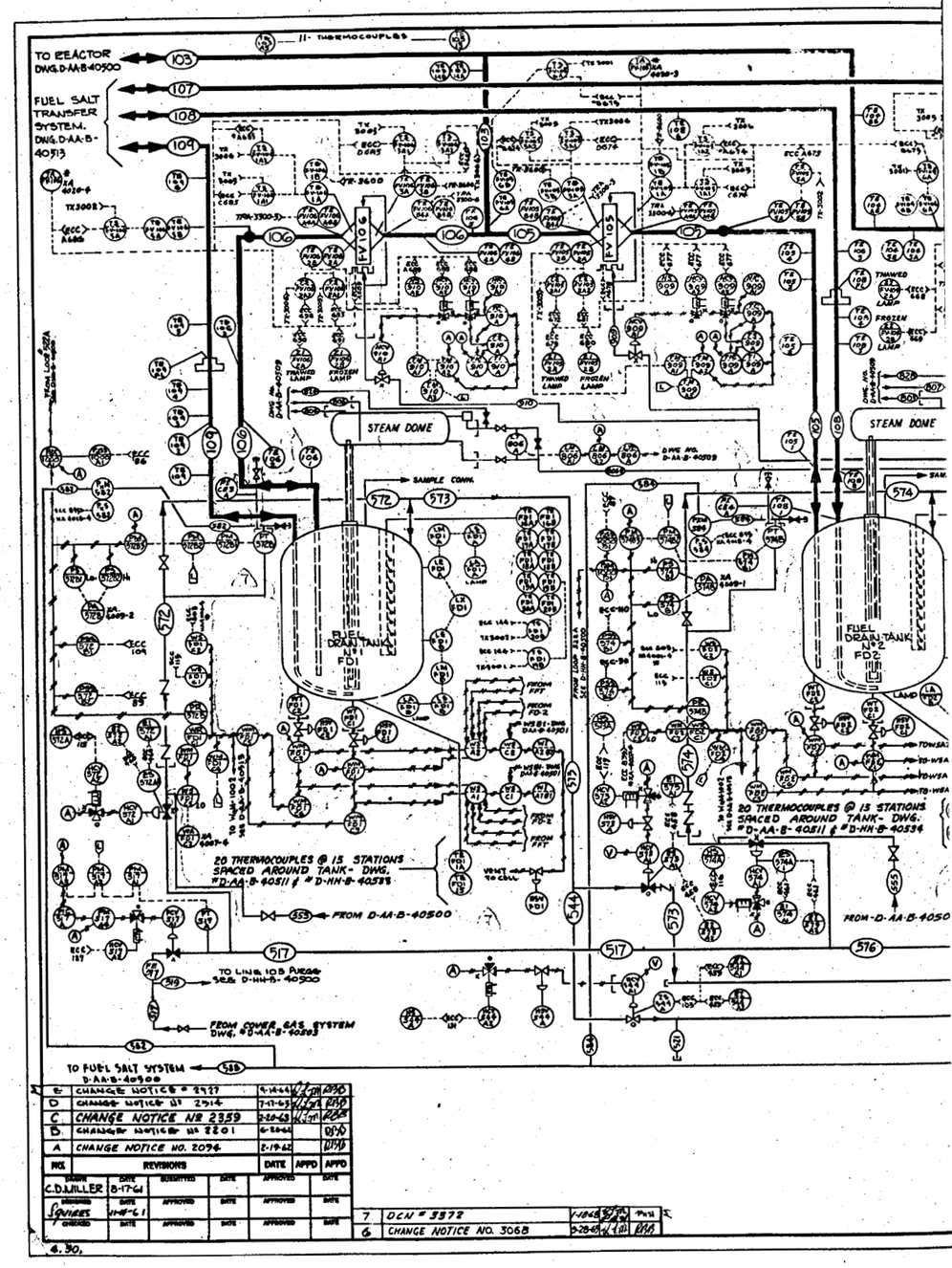
TO REACTOR DWG. D-AA-B-40500
FUEL SALT TRANSFER SYSTEM. DWG. D-AA-B-40513
11- THERMOCOUPLES
103
107
108
109
FV 106
FV 105
106
105
STEAM DOME
FUEL DRAIN TANK Nº1 FD1
FUEL DRAIN TANK Nº2 FD2
SAMPLE CONN.
THAWED LAMP
FROZEN LAMP
20 THERMOCOUPLES @ 15 STATIONS SPACED AROUND TANK- DWG. #D-AA-B-40511 & #D-HH-B-40533
20 THERMOCOUPLES @ 15 STATIONS SPACED AROUND TANK- DWG. #D-AA-B-40511 & #D-HH-B-40534
FROM D-AA-B-40500
TO LINE 103 PURGE SEE D-HH-B-40500
FROM COVER GAS SYSTEM DWG. #D-AA-B-40503
TO FUEL SALT SYSTEM D-AA-B-40500
517
576
VENT TO CELL
E CHANGE NOTICE # 2927 9-14-64
D CHANGE NOTICE Nº 2514 7-17-63
C CHANGE NOTICE Nº 2359 2-20-63
B CHANGE NOTICE Nº 2201 6-20-62
A CHANGE NOTICE NO. 2094 2-19-62
NO. REVISIONS DATE APPD APPD
DRAWN C.D.MILLER DATE 8-17-61 SUBMITTED DATE APPROVED DATE
DESIGNED Squires DATE 11-11-61 APPROVED DATE APPROVED DATE
CHECKED DATE APPROVED DATE APPROVED DATE
7 DCN # 3372 1-10-68
6 CHANGE NOTICE NO. 3068 9-28-65
4.30.

Fig. 3.2.0. Fu

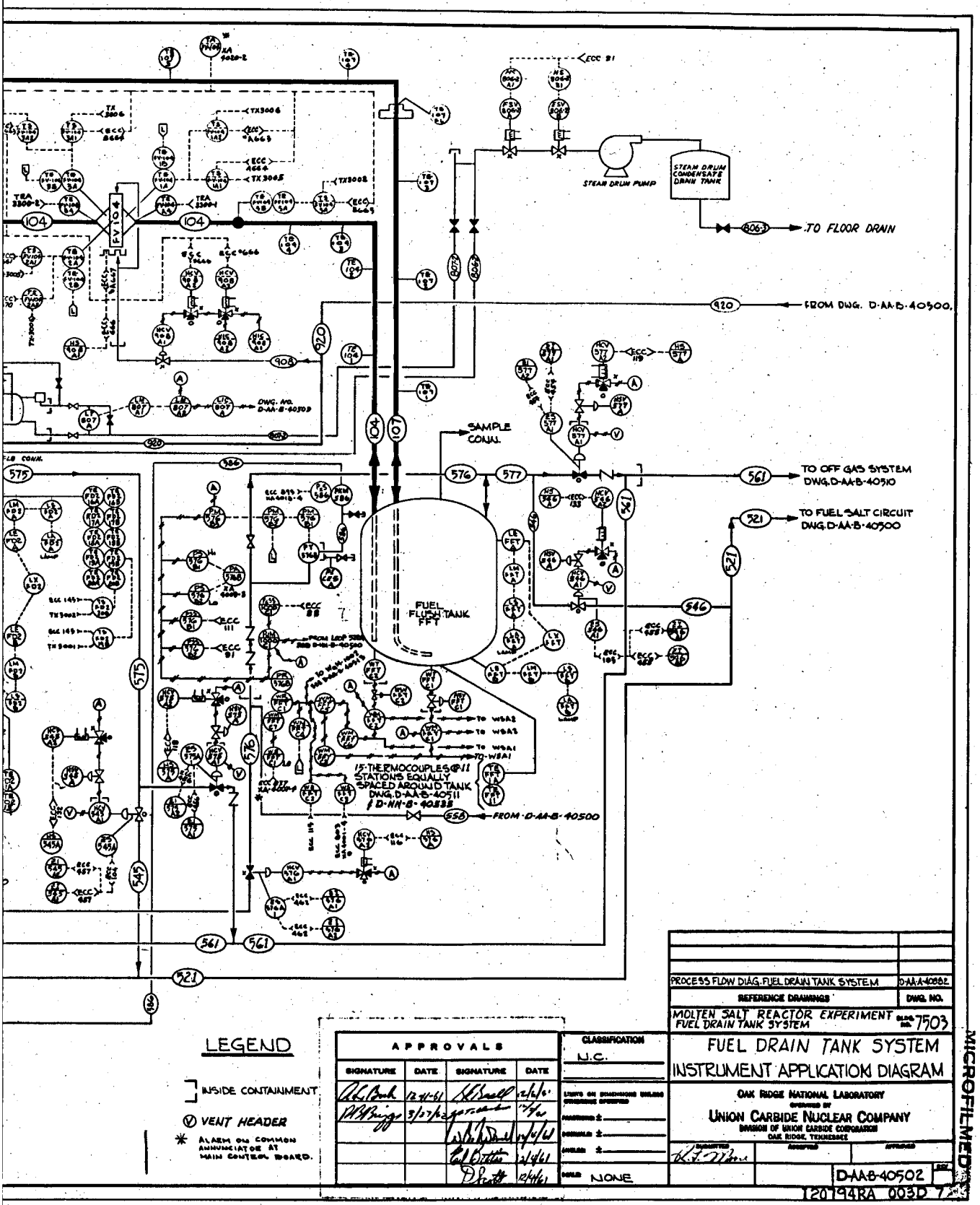


l drain tank system, instrument application diagram.

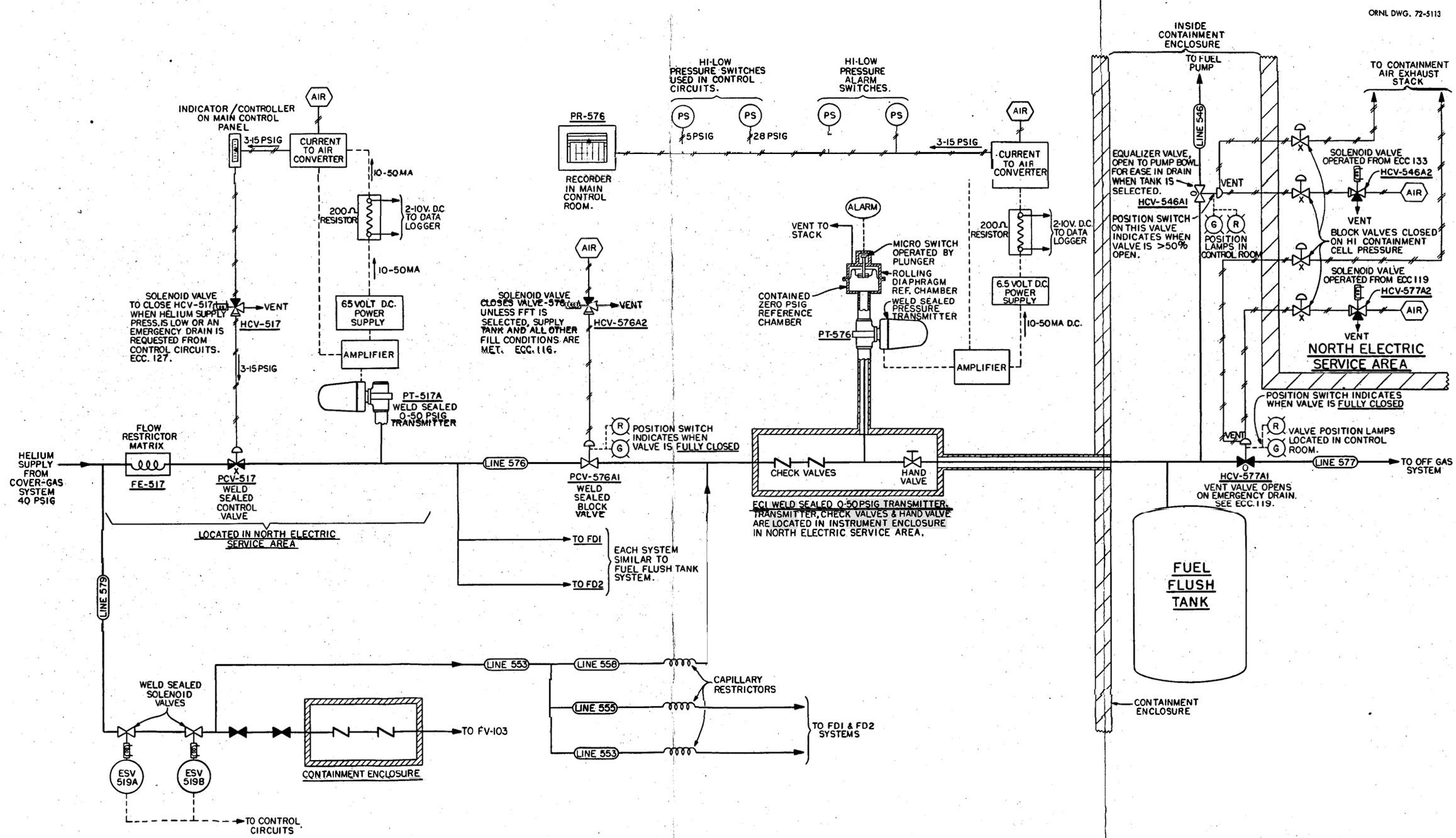


Fig. 3.2.1. Drain tank pressurizing system.

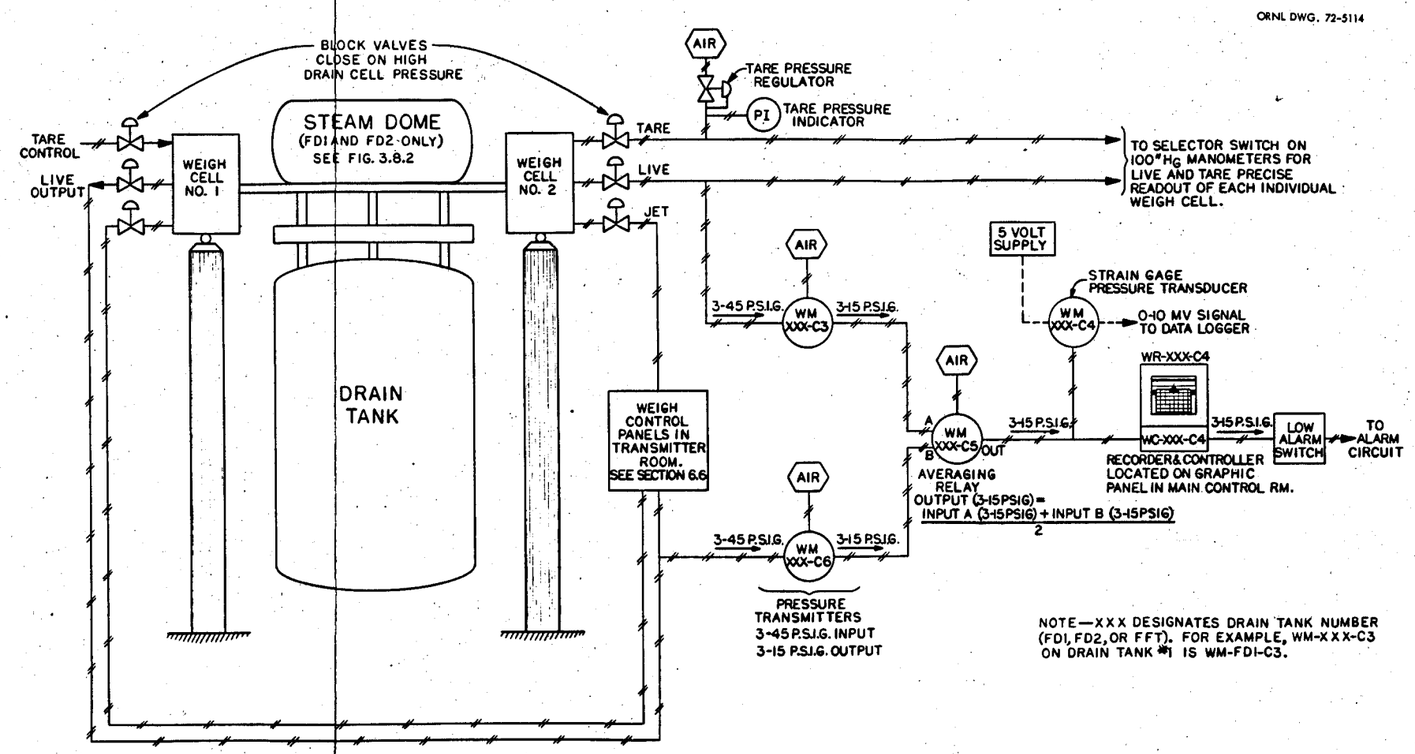


Fig. 3.2.2. Typical drain tank weighing system.

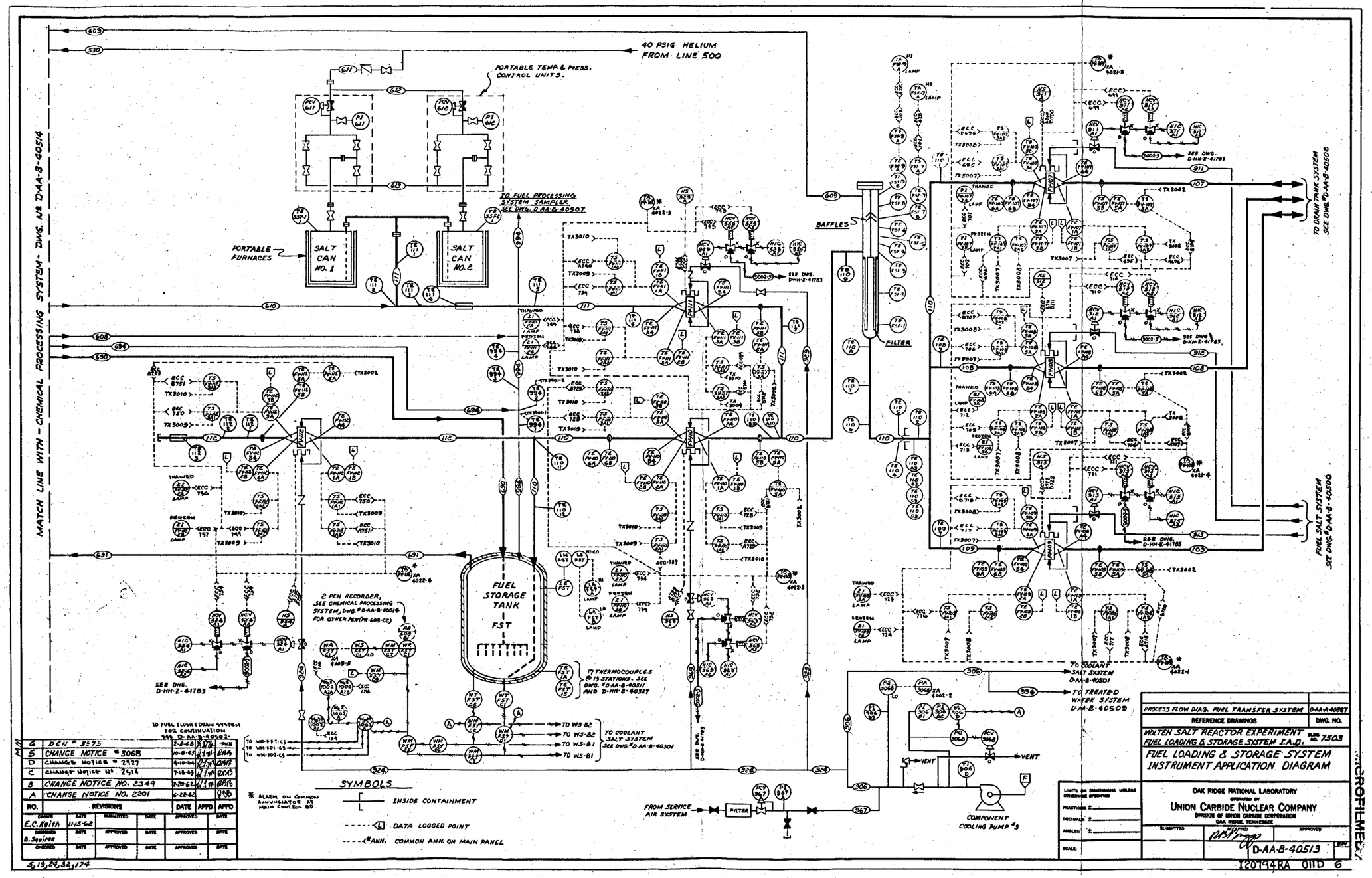


Fig. 3.2.3. Fuel loading and storage system, instrument application diagram.

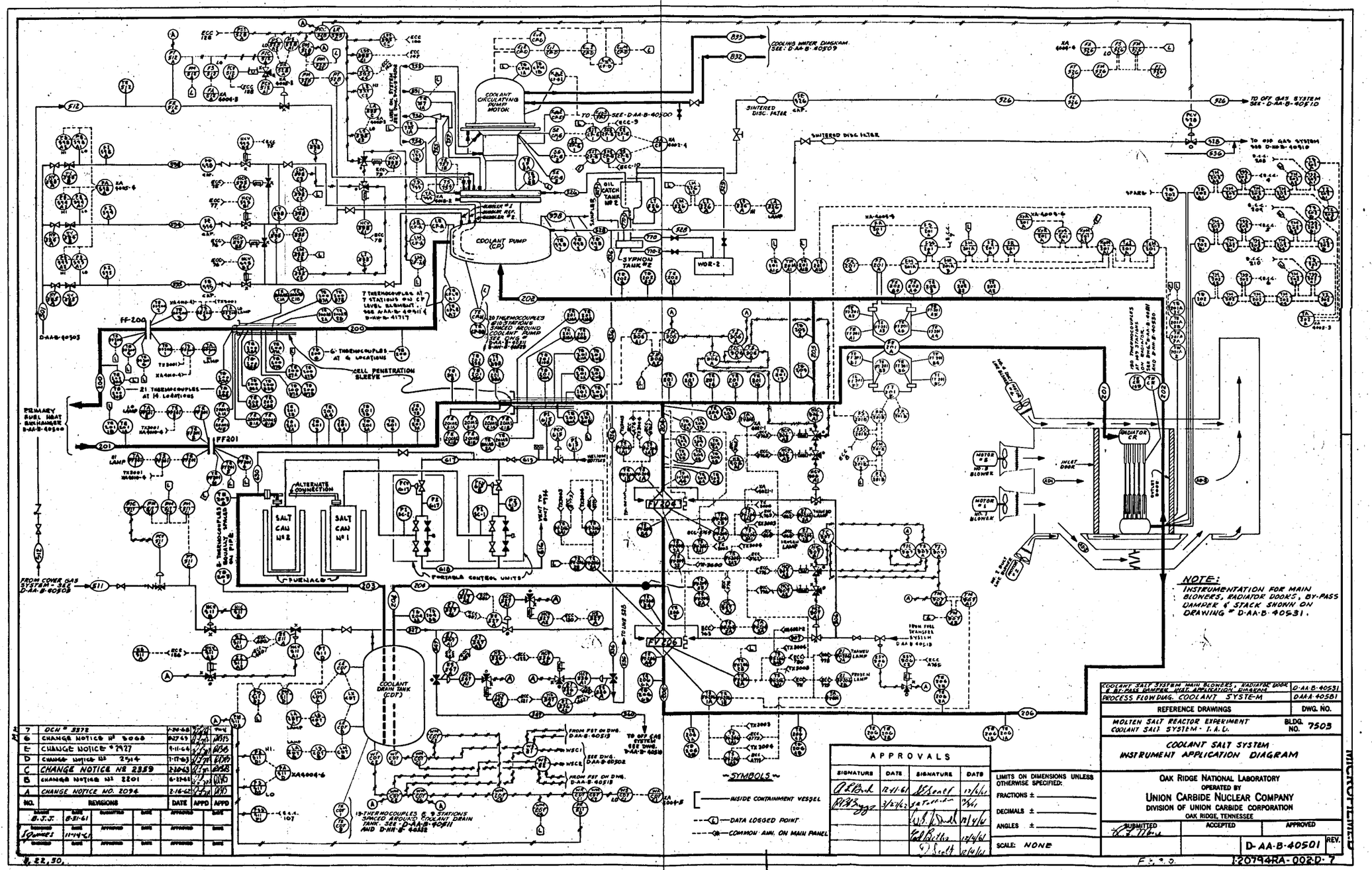


Fig. 3.3.0. Coolant salt system, instrument application diagram.

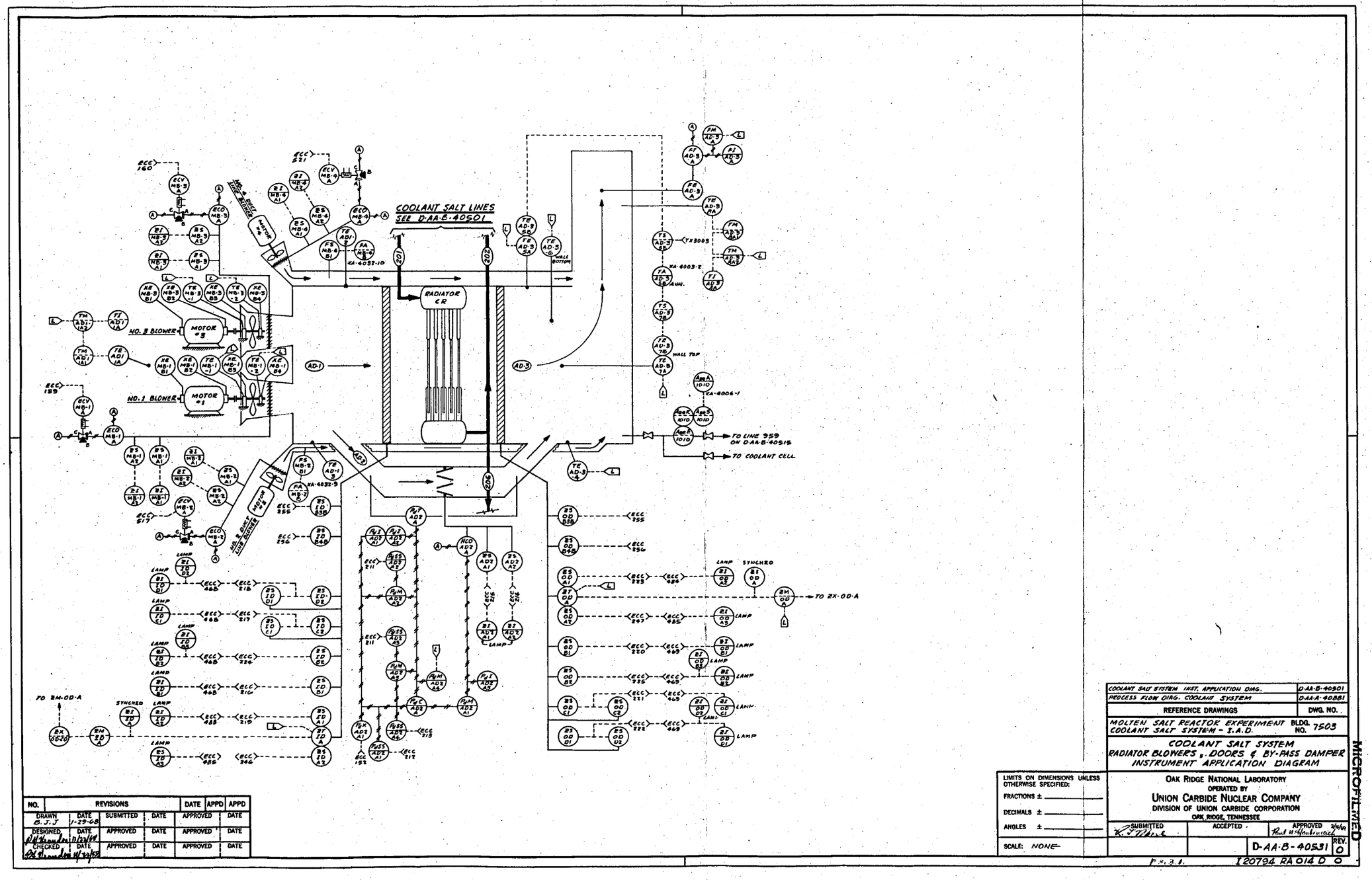


Fig. 3.3.1. Coolant salt system – radiator blowers, doors, and bypass dampers, instrument application diagram.

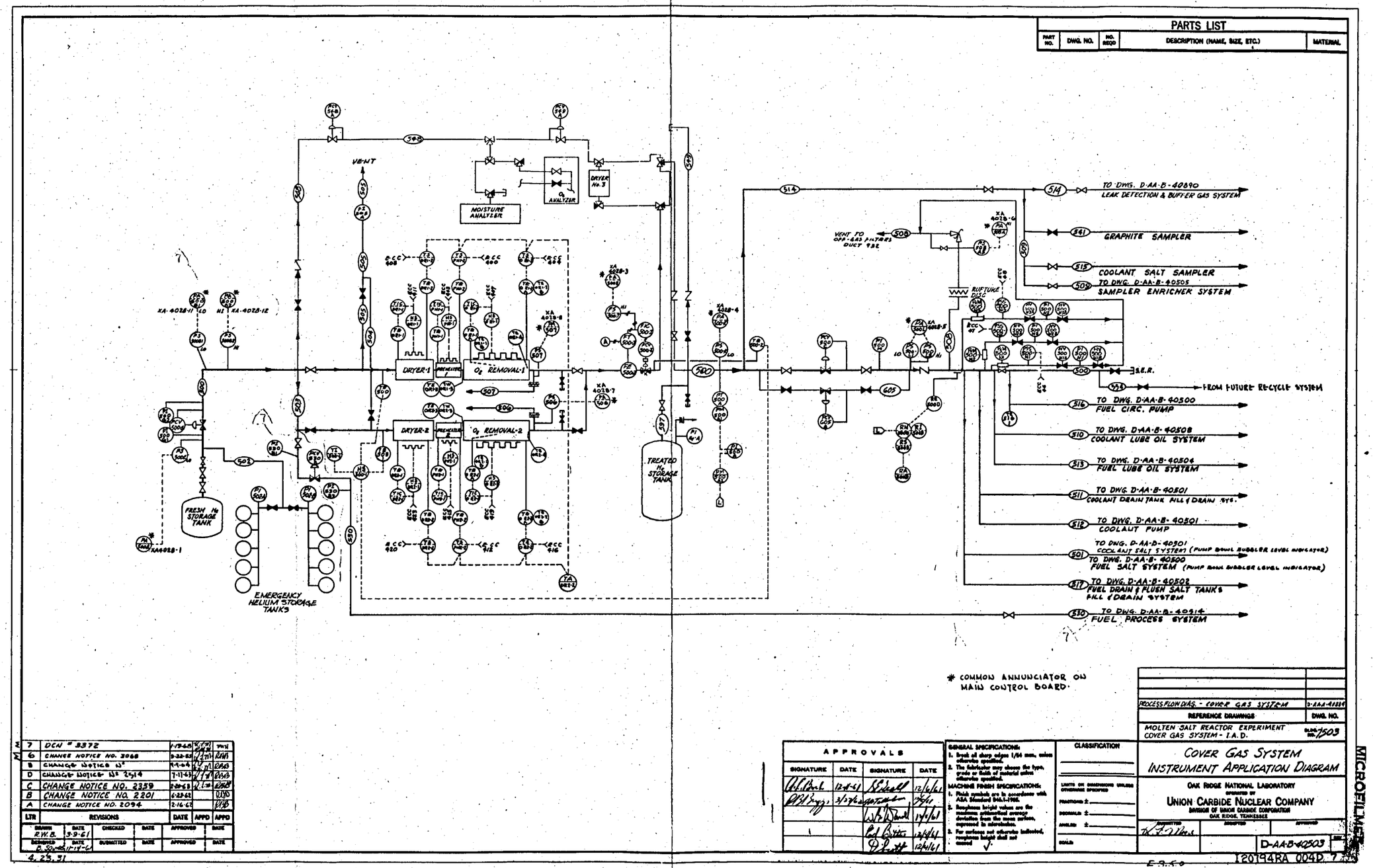


Fig. 3.5.0. Cover gas system, instrument applications diagram.

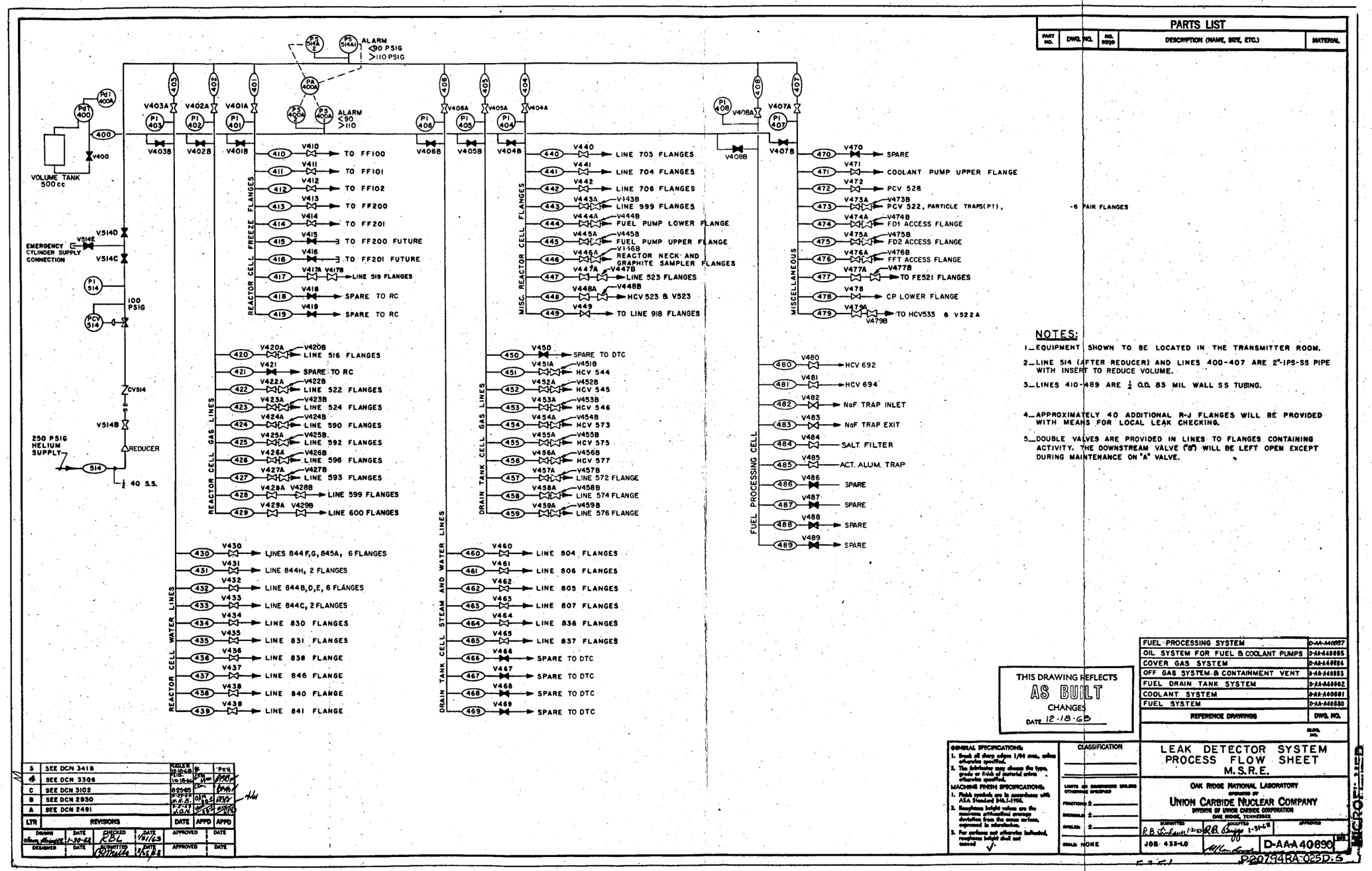


Fig. 3.5.1. Leak detector system, instrument applications diagram.

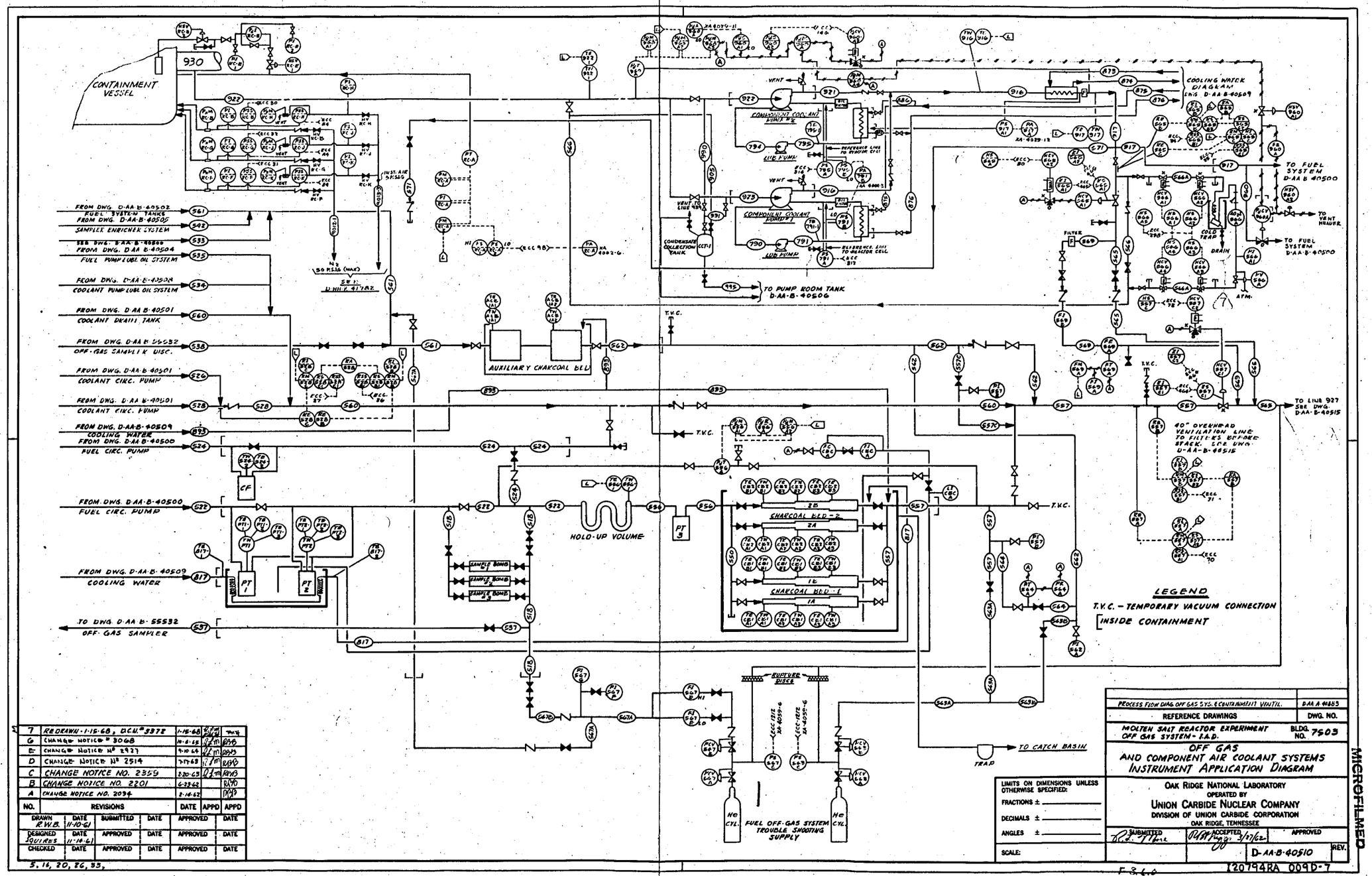


Fig. 3.6.0. Off-gas and component air coolant systems, instrument application diagram.

3

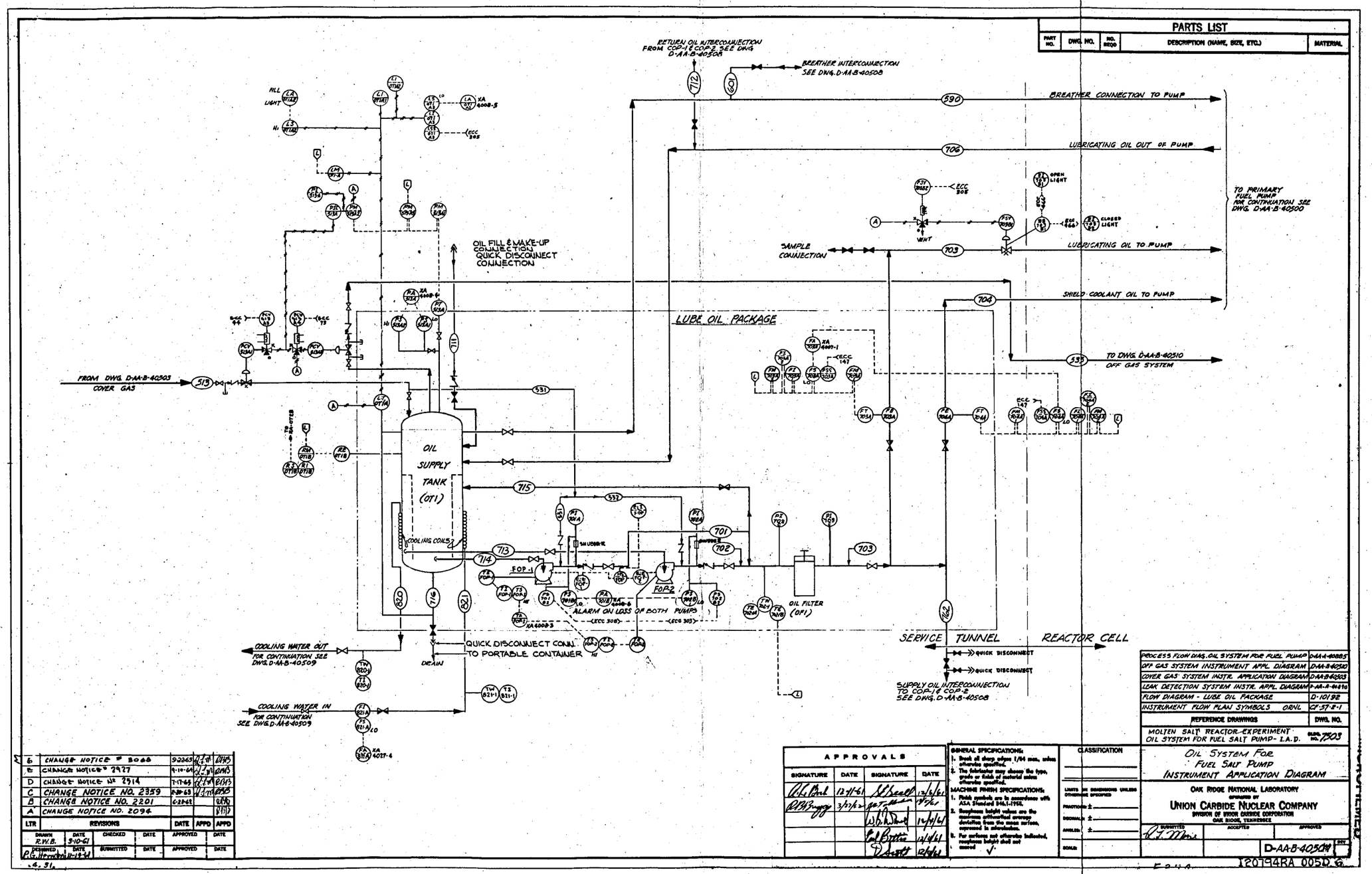


Fig. 3.7.0. Oil system for fuel salt pump, instrument application diagram.

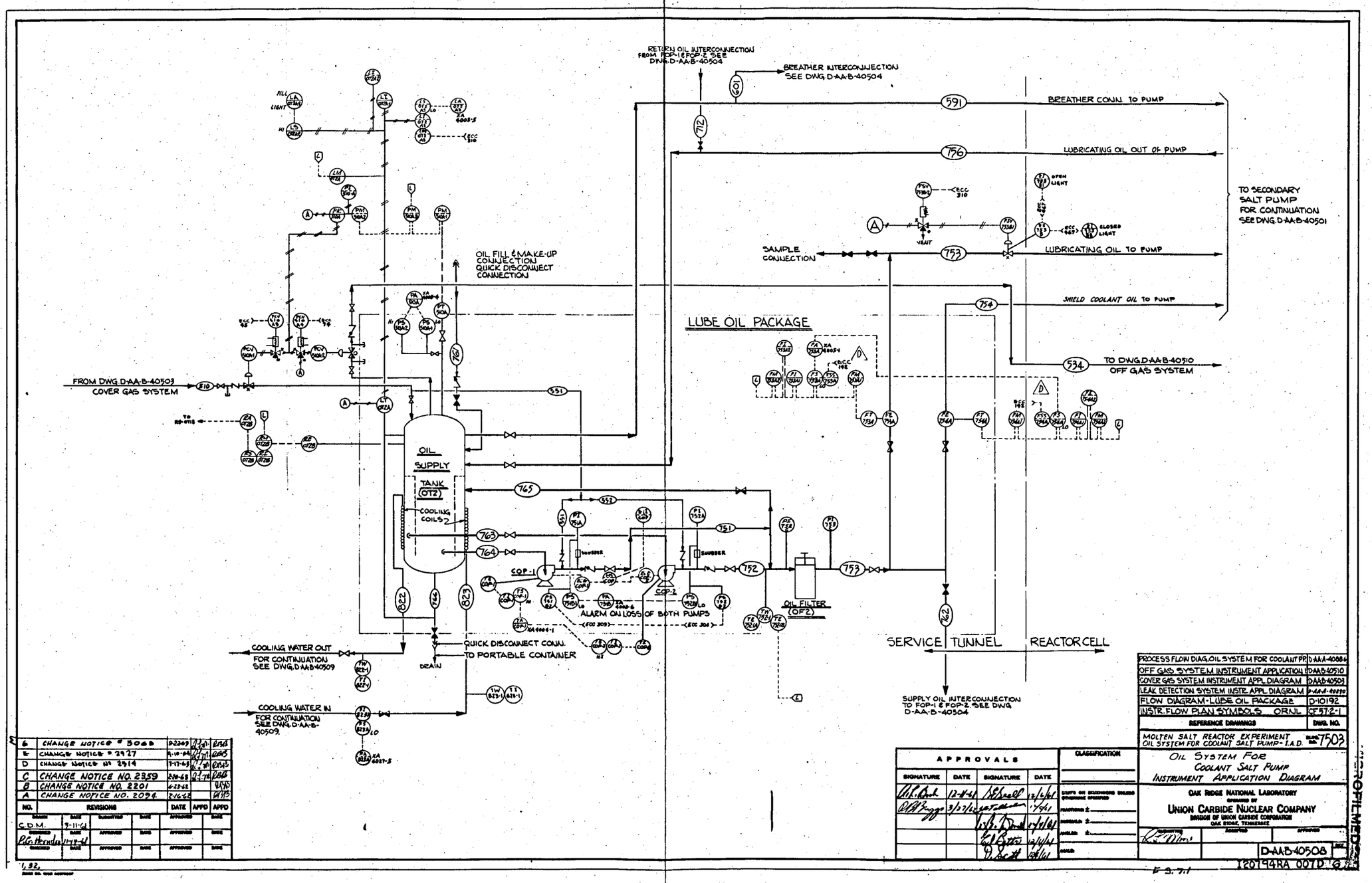


Fig. 3.7.1. Oil system for coolant salt pump, instrument application diagram.

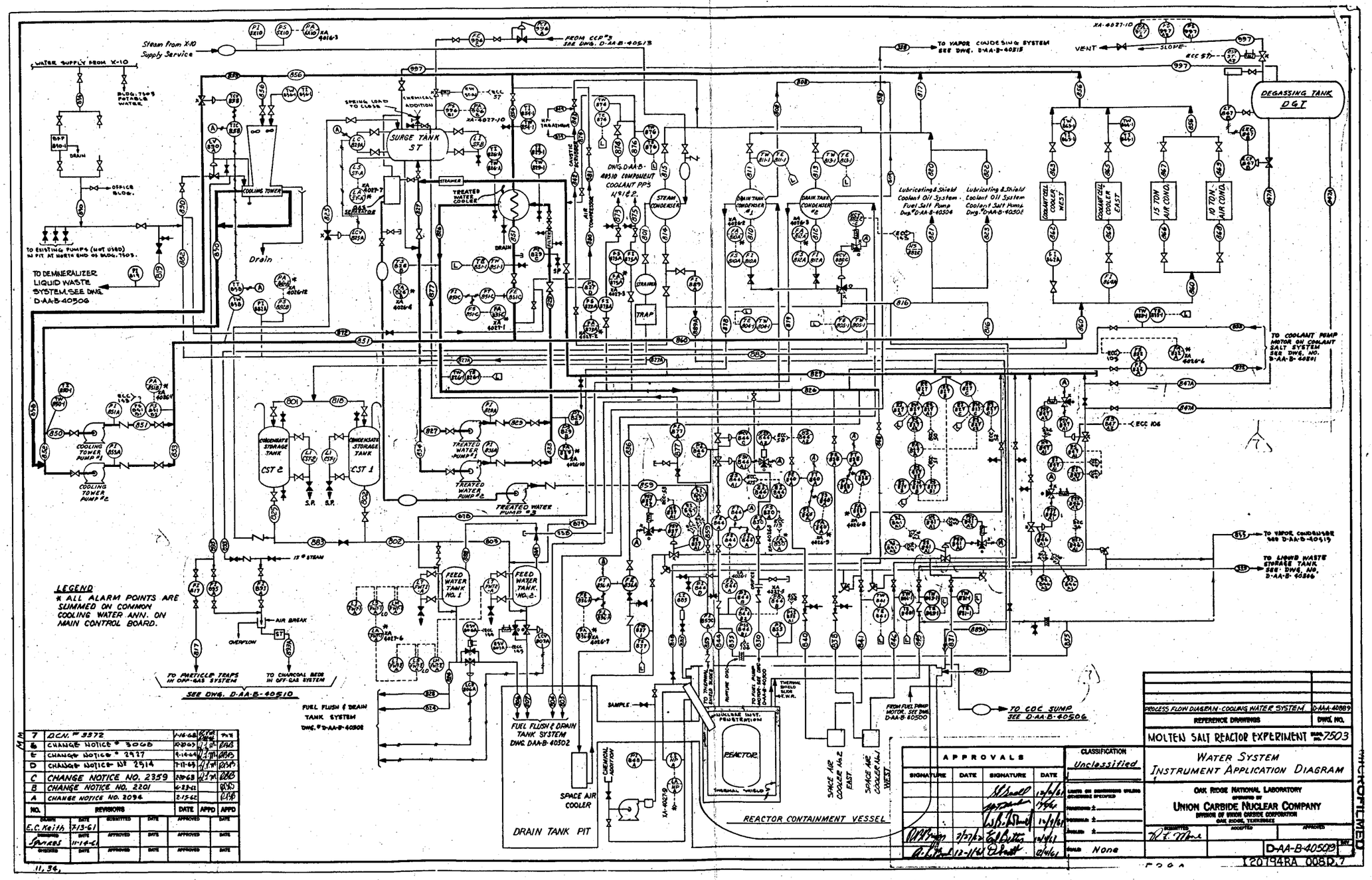


Fig. 3.8.0. Water system, instrument application diagram.

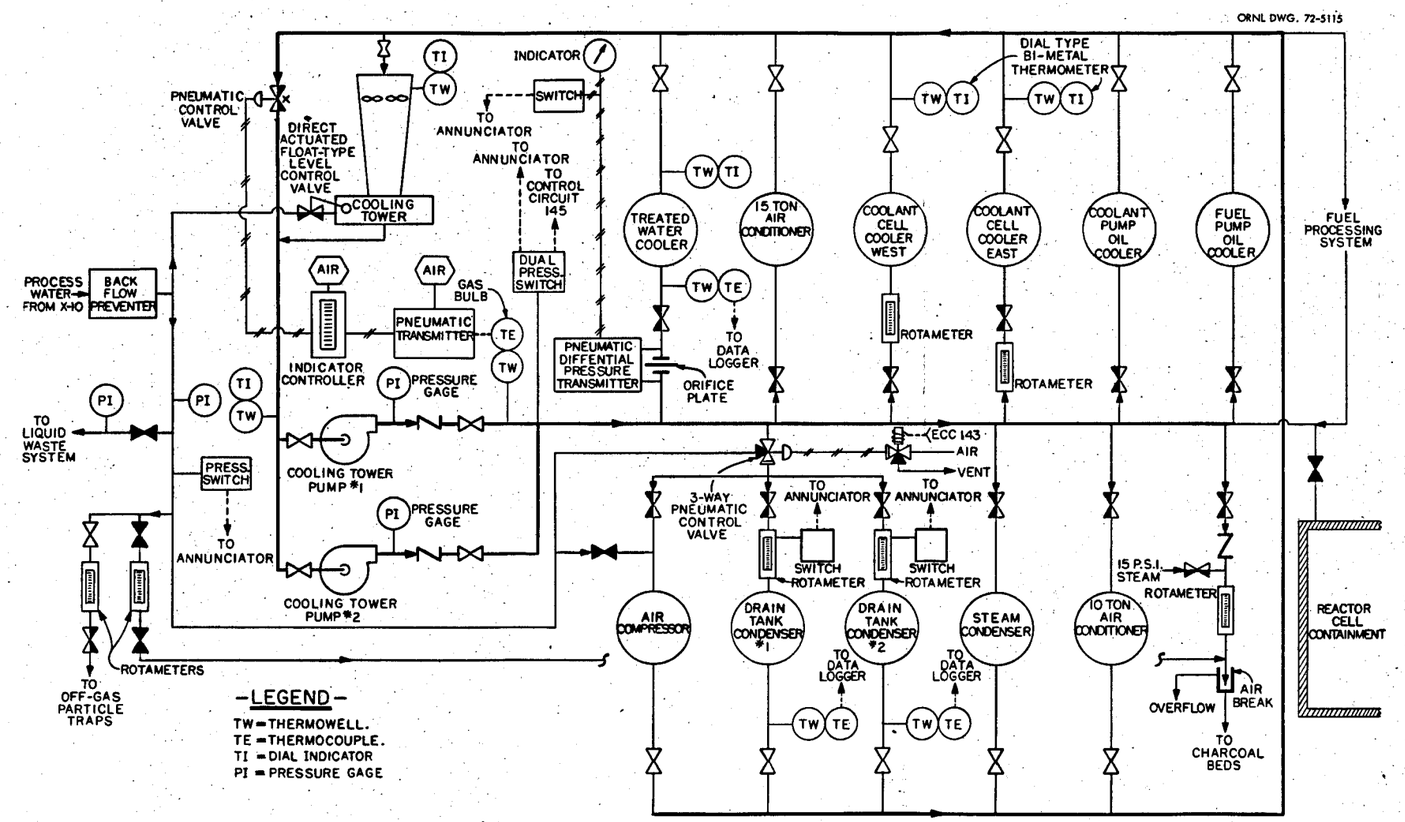


Fig. 3.8.1. Process water system.

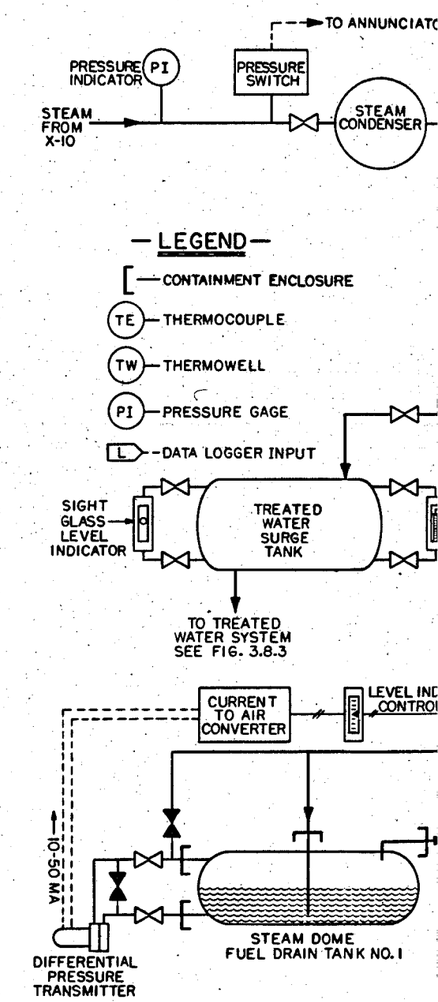

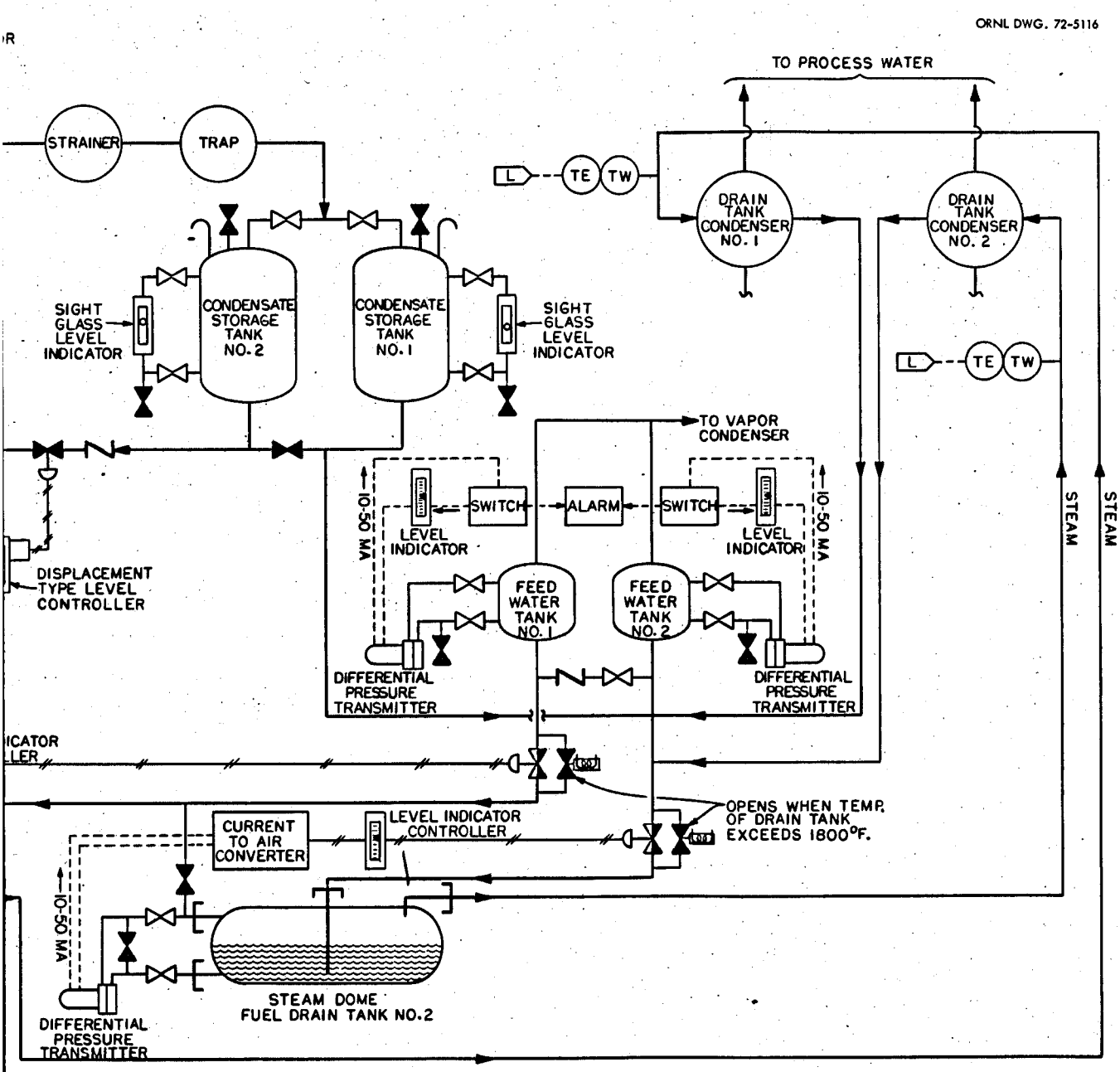


Fig. 3.8.2. Condensate water system.

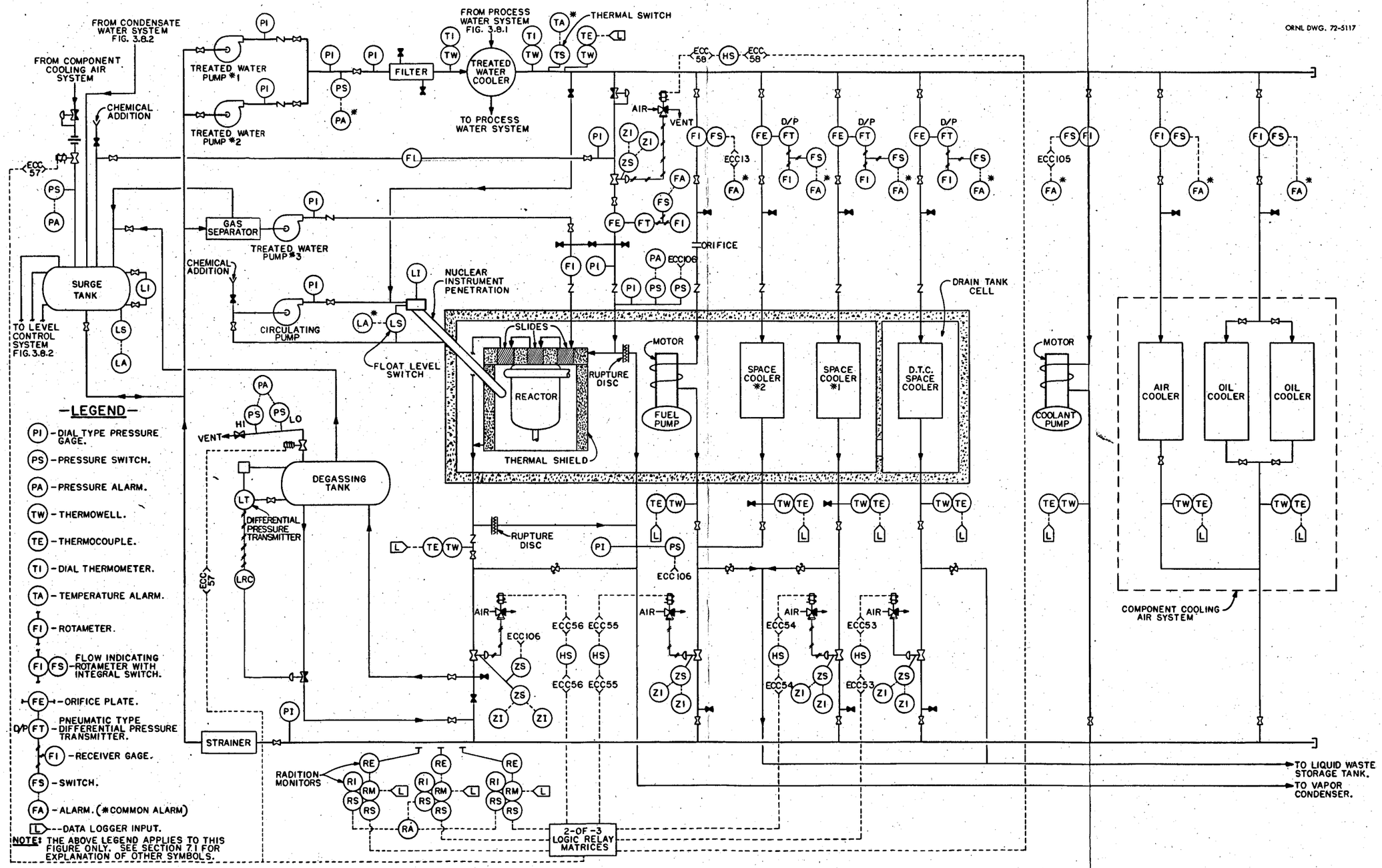


Fig. 3.8.3. Treated water system.

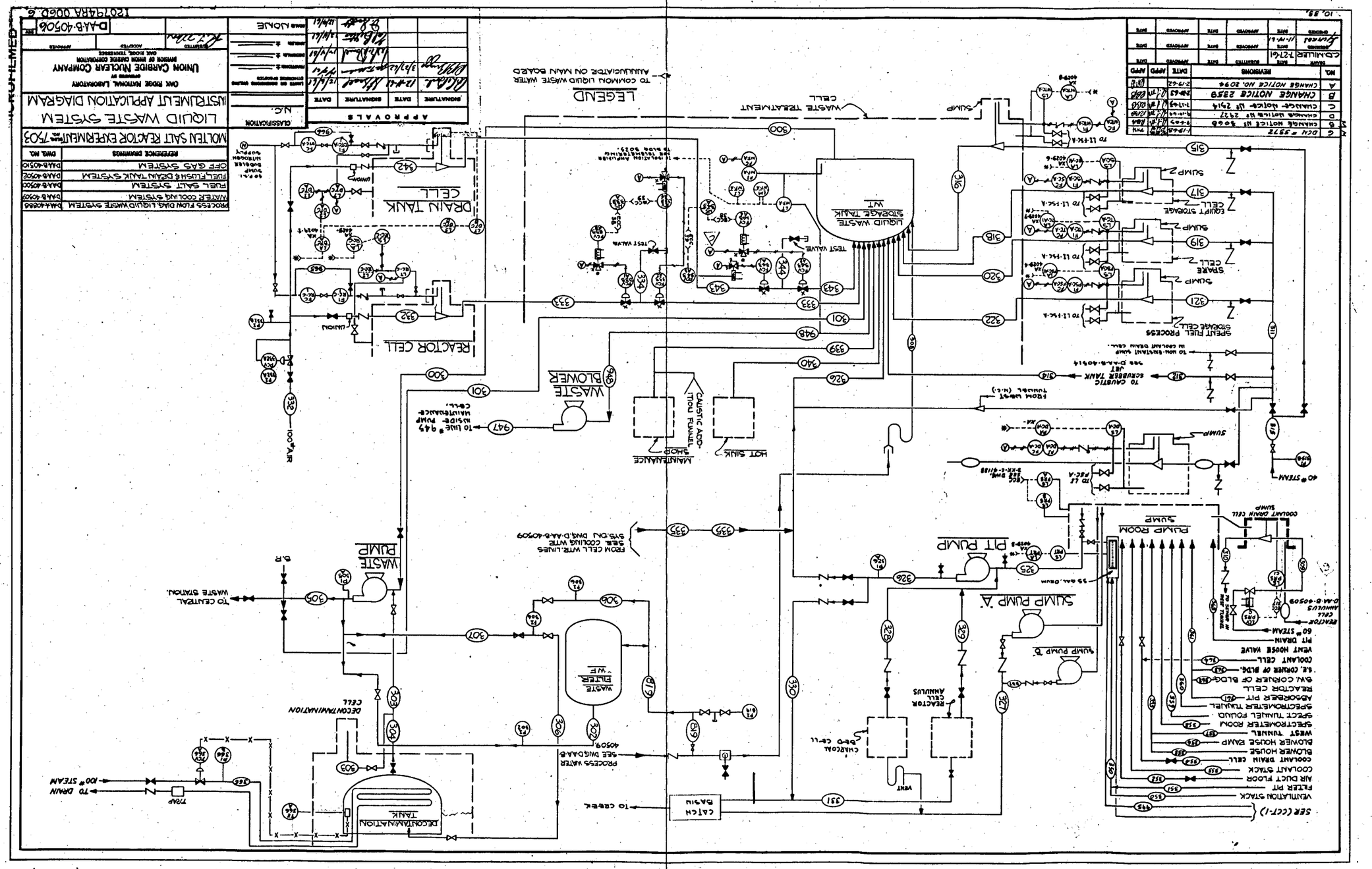

Fig. 3.9.0. Liquid waste system, instrument applications diagram.

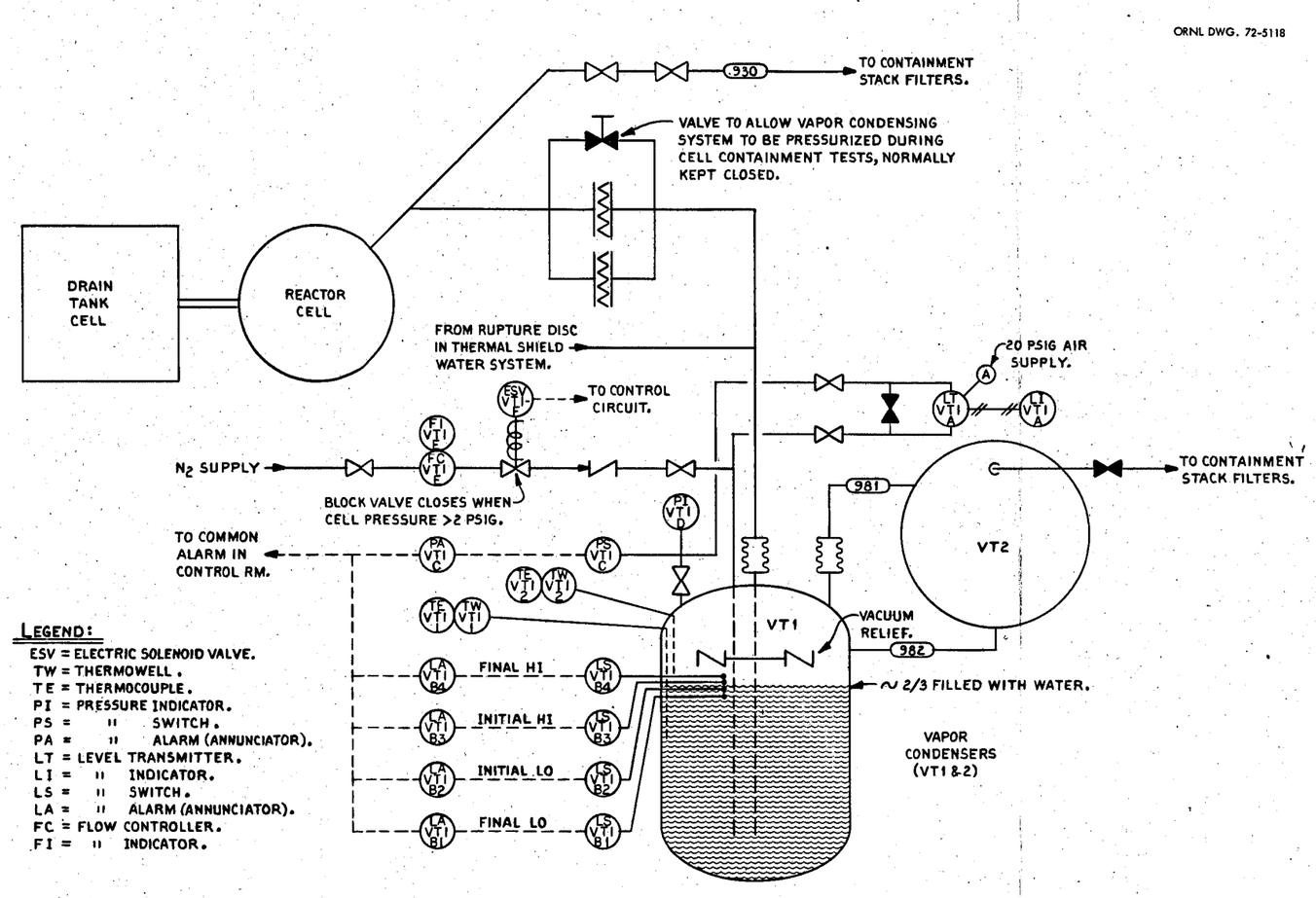


Fig. 3.10.0. Vapor condensing system.

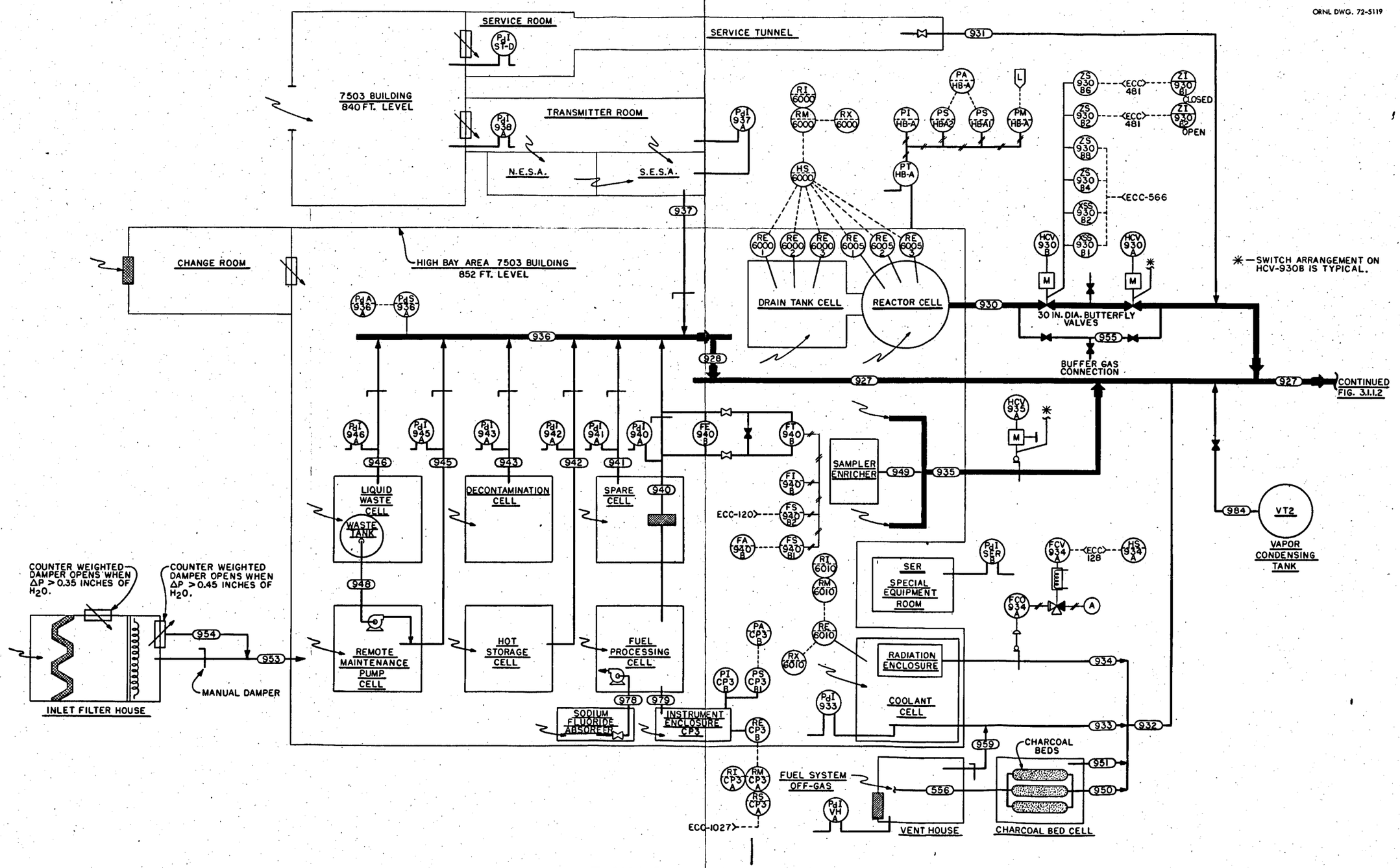


Fig. 3.11.1. Containment air system – sheet 1.

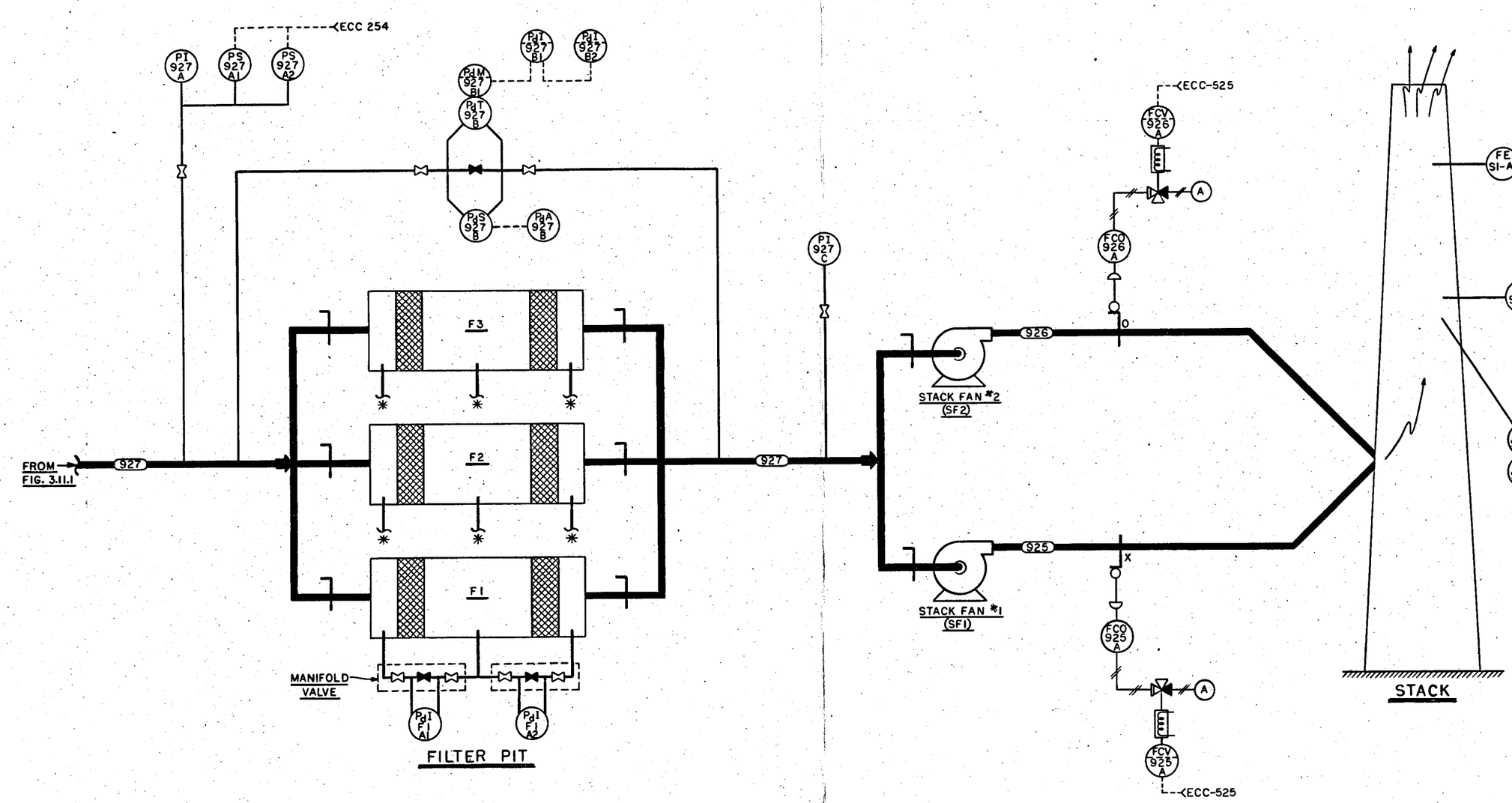


✳ — F1 ARRANGEMENT IS TYPICAL.

Fig. 3.11.2. Containment air system – sheet 2.

ORNL DWG. 72-5120

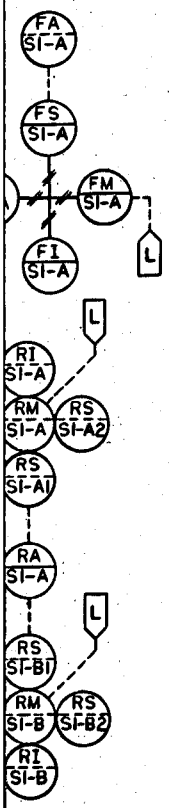

ORNL-DWG 63-5848R

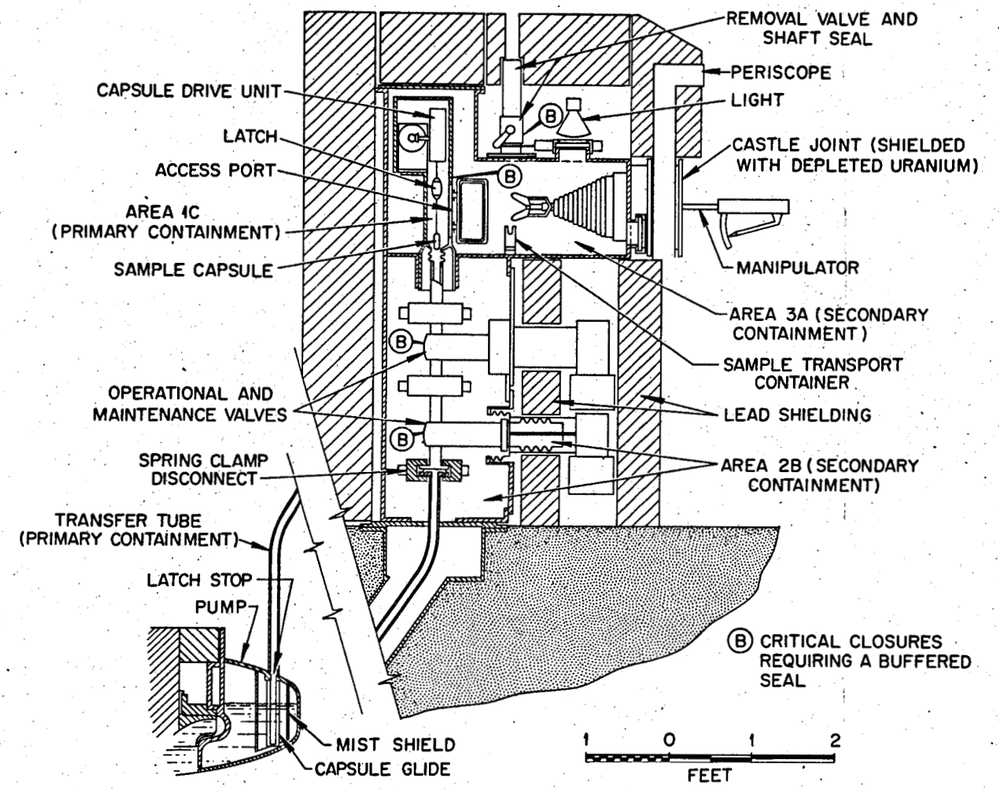


Fig. 3.12.1A. Schematic representation, fuel sampler-enricher dry box.

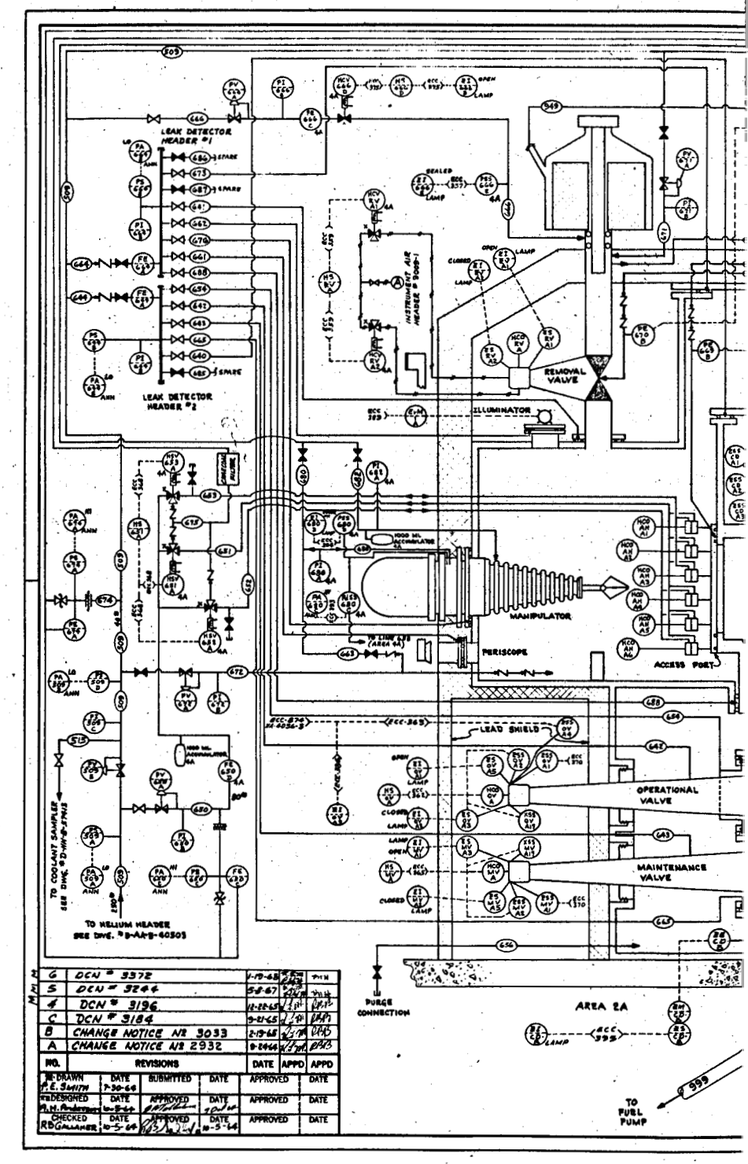


Fig. 3.12.1B

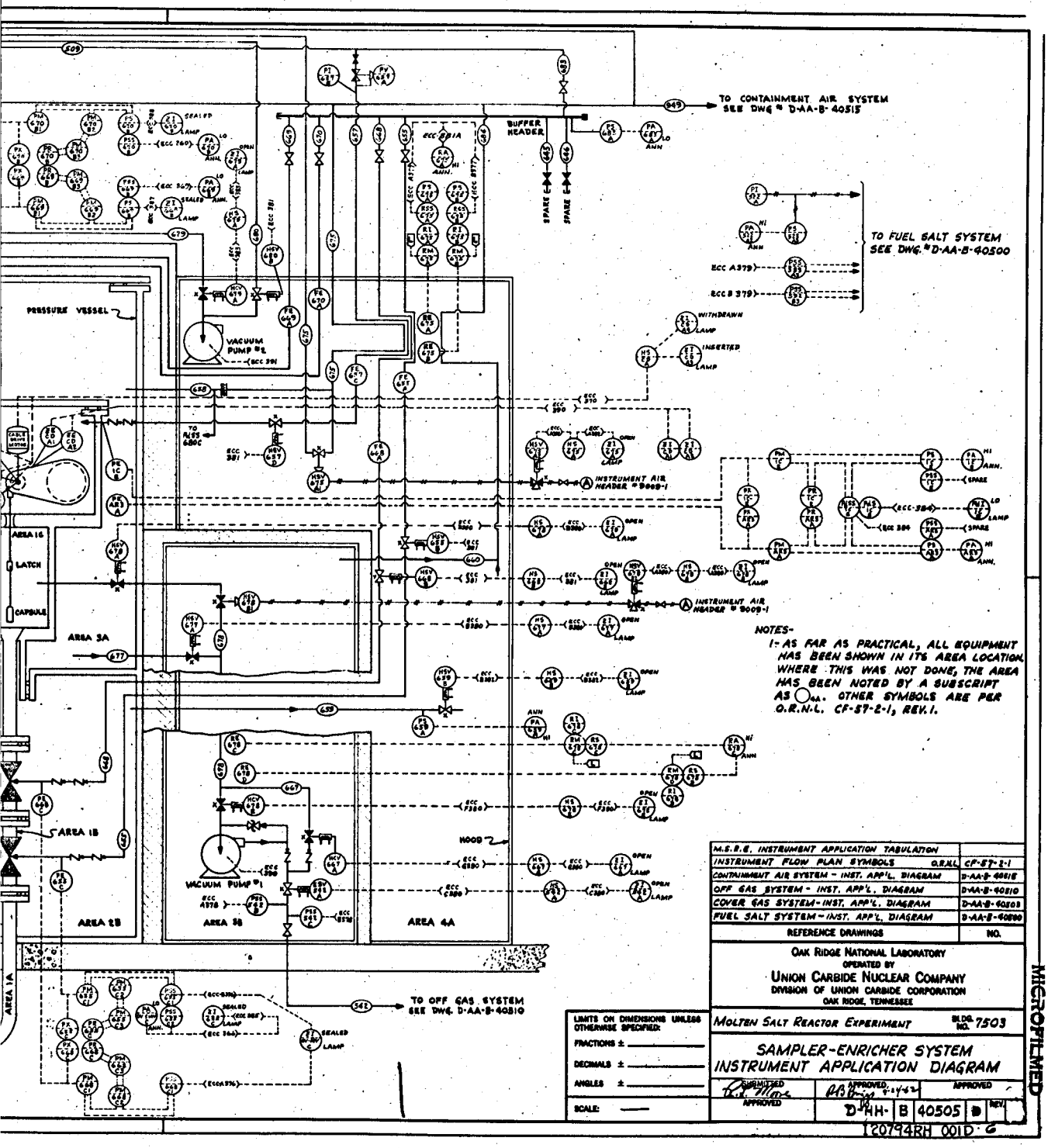


Instrument application diagram, sampler-enricher system.

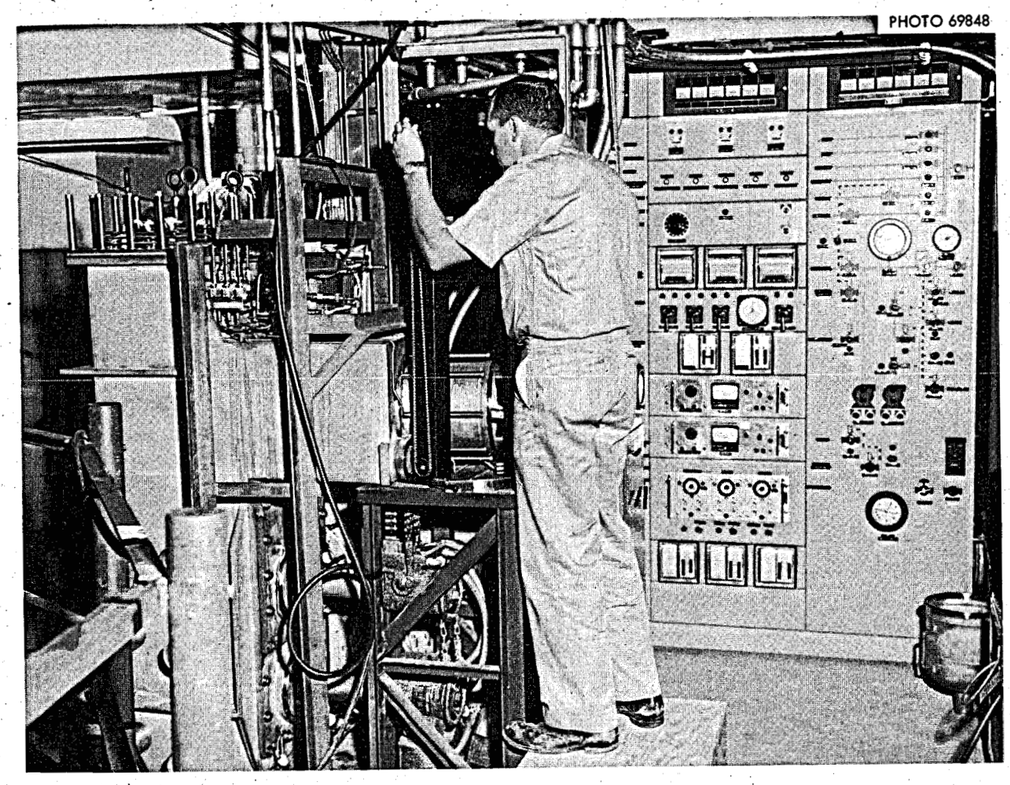


Fig. 3.12.1C. MSRE sampler-enricher control panels.

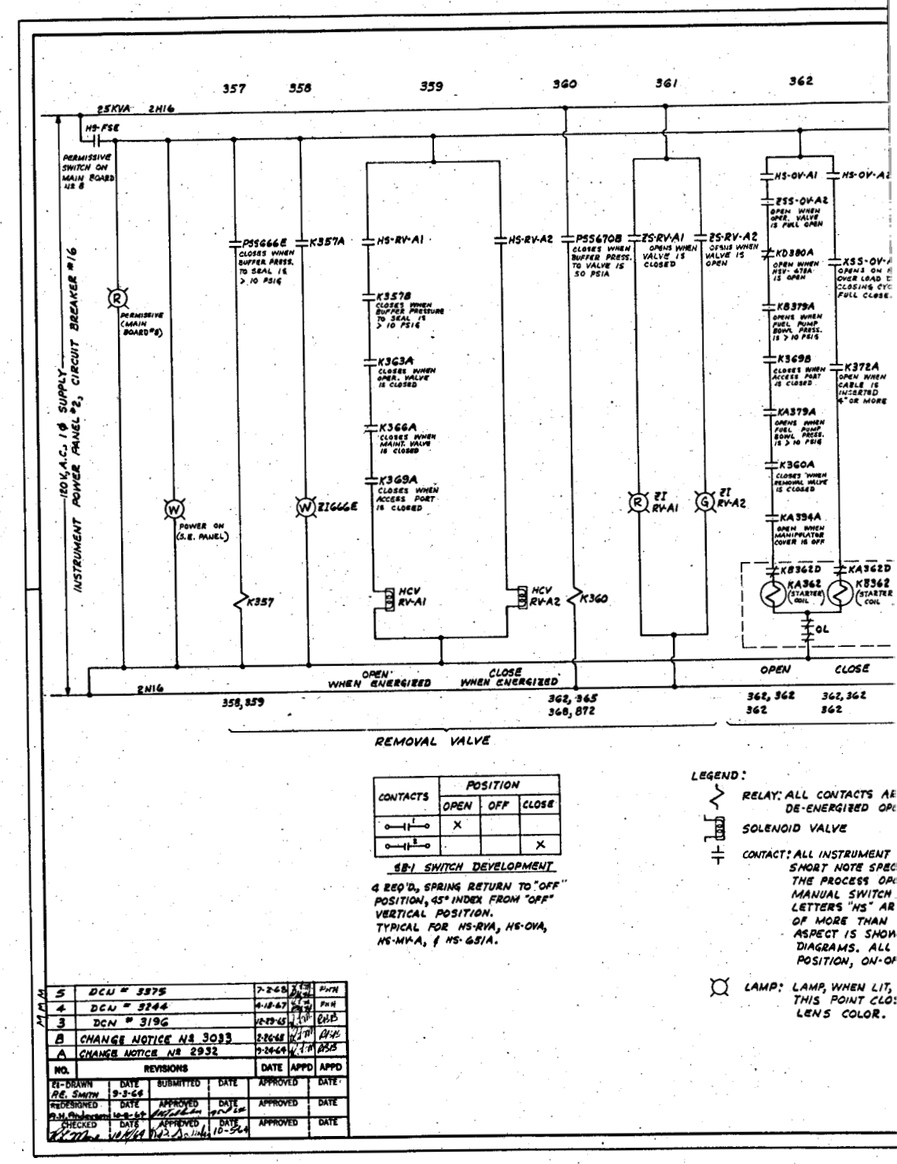


Fig. 3.12.1D. Sampler-enricher system,

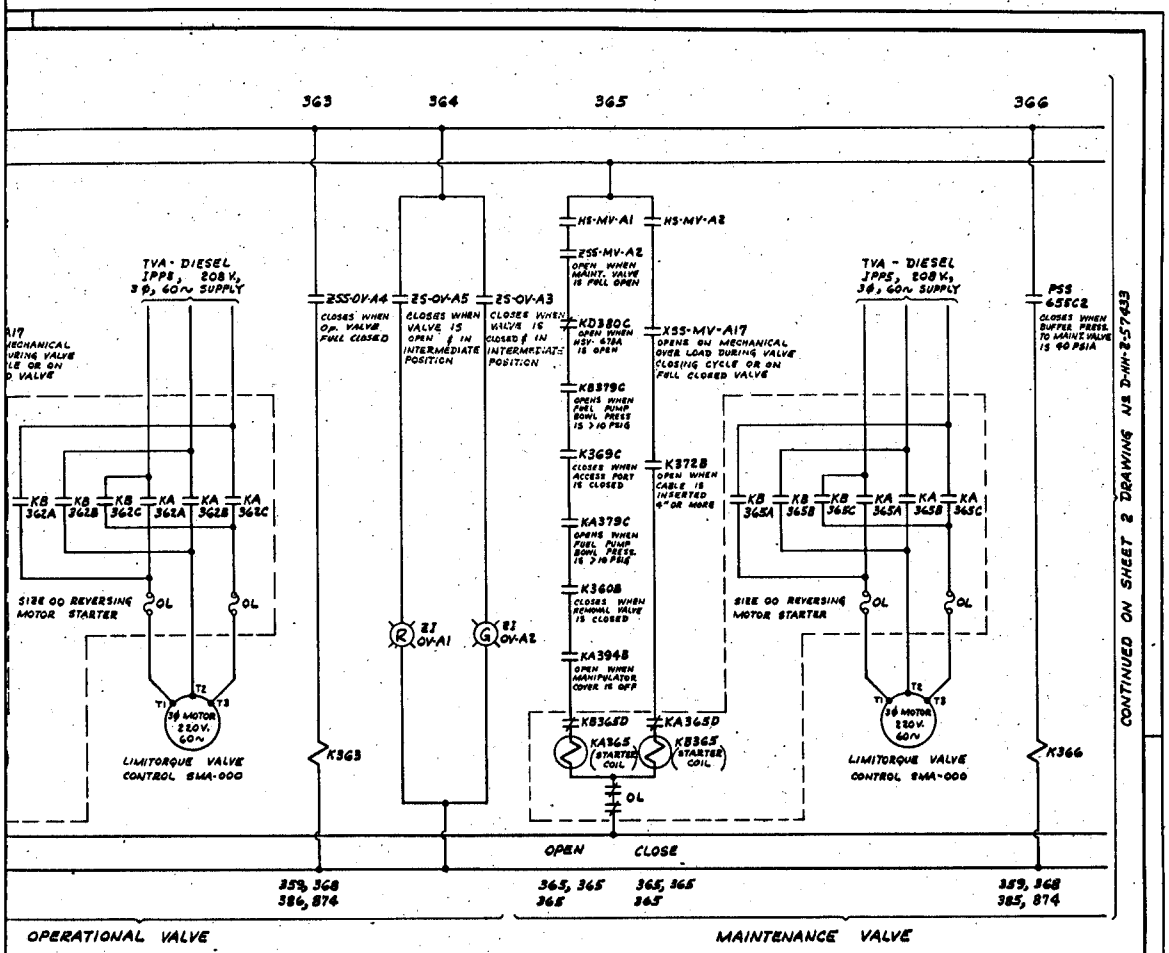


E SHOWN FOR A
RATING COIL

CONTACTS ARE SHOWN OPEN. A
IFIES THE CONTACT ASPECT FOR
RATING CONDITIONS.
CONTACTS IDENTIFIED BY THE
SHOWN OPEN. FOR SWITCHES
TWO POSITIONS THE CONTACT
N ON SWITCH DEVELOPMENT
OTHER "HS" SWITCHES ARE TWO
F, MAINTAINED CONTACT TYPE.

INDICATES ALL CONTACTS ABOVE
ED. LETTER IN SYMBOL INDICATES

NOTES:
1-SOLENOID VALVES HCV-RVA1 & HCV-RVA2 ARE 3-WAY VALVES WHICH, WHEN ENERGIZED, CONNECT AIR SUPPLY TO THE REMOVAL VALVE PNEUMATIC OPERATOR, & WHEN DE-ENERGIZED, CONNECT PNEUMATIC OPERATOR TO VENT.

| REFERENCE DRAWINGS | NO. |
|---|---|
| S.E. ENGINEERING ELEMENTARY, SHEET 3 of 5 | D-HH-Z-48977 |
| S.E. CONTROL BOARD, COMPOSITE LAYOUT | D-HH-Z-41750 |
| S.E. ENGINEERING ELEMENTARY, SHEET 4 of 5 | D-HH-Z-57438 |
| S.E. ENGINEERING ELEMENTARY, SHEET 3 of 5 | D-HH-Z-57434 |
| S.E. ENGINEERING ELEMENTARY, SHEET 2 of 5 | D-HH-Z-57433 |
| S.E. INSTRUMENT APPLICATION DIAGRAM | D-HH-B-40305F |

OAK RIDGE NATIONAL LABORATORY
OPERATED BY
UNION CARBIDE NUCLEAR COMPANY
DIVISION OF UNION CARBIDE CORPORATION
OAK RIDGE, TENNESSEE

LIMITS ON DIMENSIONS UNLESS OTHERWISE SPECIFIED:
FRACTIONS ±
DECIMALS ±
ANGLES ±
SCALE: —

MOLTEN SALT REACTOR EXPERIMENT — BLDG. NO. 7503

SAMPLER ENRICHER SYSTEM
ENGINEERING ELEMENTARY DIAGRAM
SHEET 1 OF 5

SUBMITTED | APPROVED | APPROVED | APPROVED

D-HH- Z 41721 D REV.

120794RH 292D 5

MICROFILME

engineering elementary schematic – sheet 1.

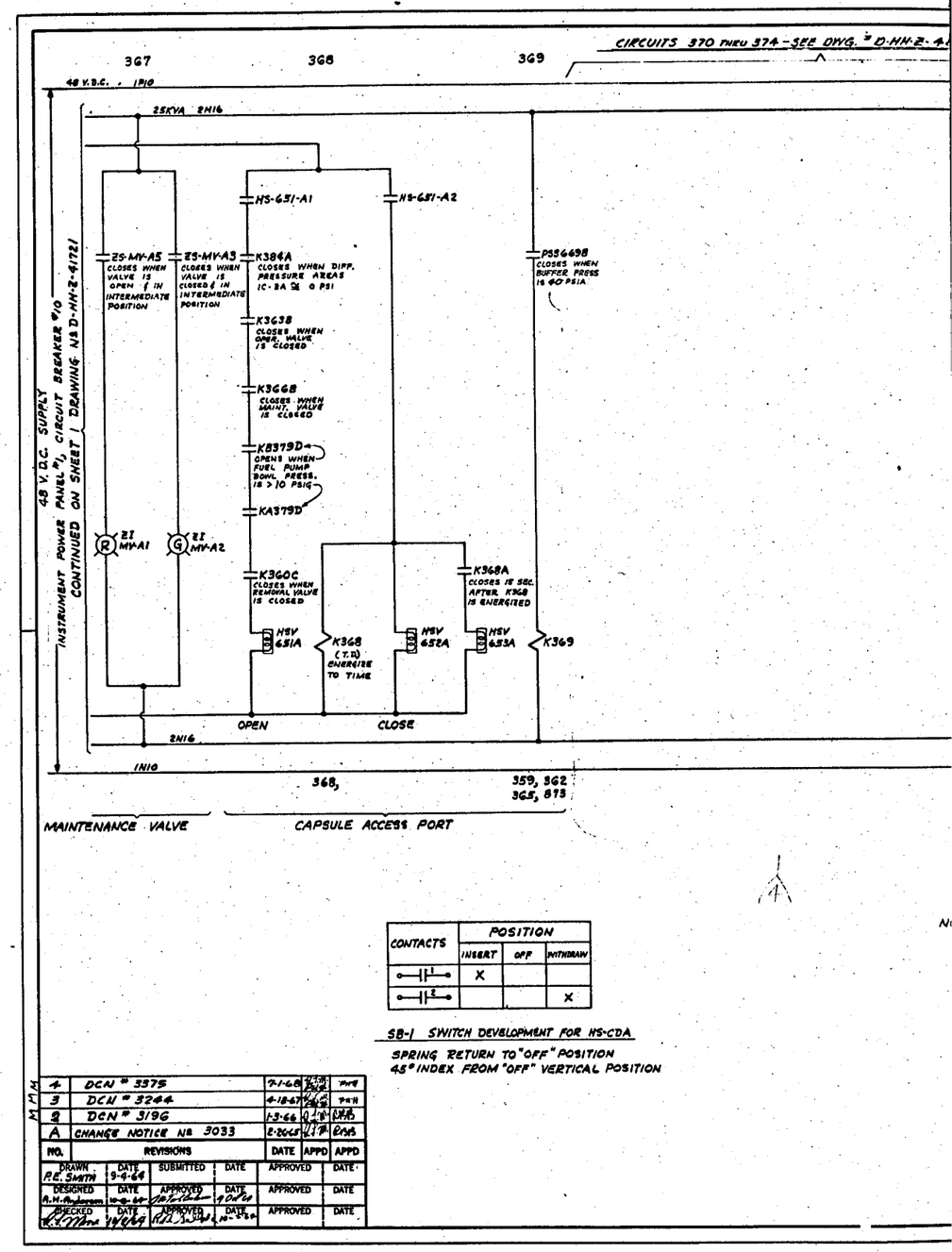


Fig. 3.12.1E. Sampler

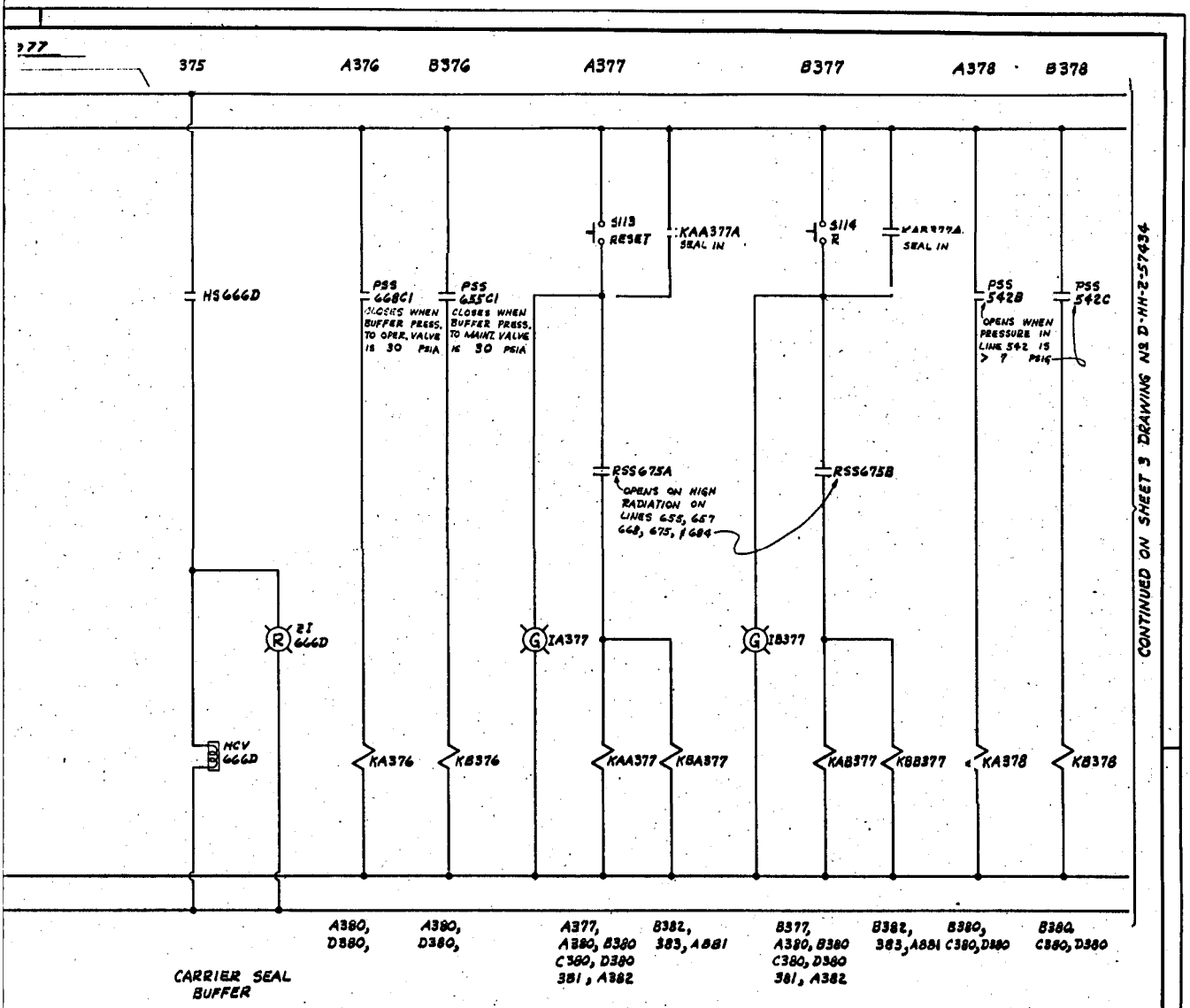


TES:

1- SOLENOID VALVES HSV-651A, HSV-652A, & HSV-653A ARE 3-WAY VALVES. WHEN ENERGIZED THESE VALVES CONNECT 80 LB. HELIUM SUPPLY TO OPERATE ACCESS PORT. WHEN DE-ENERGIZED THEY VENT TO CONTAINMENT AIR.

2- SOLENOID VALVE HCV-666D IS 2-WAY AND IS CLOSED WHEN DE-ENERGIZED.

| REFERENCE DRAWINGS | NO. |
|---|---|
| S.E. ENGINEERING ELEMENTARY, SHEET 5 OF 5 | D-HH-Z-48977 |
| S.E. CONTROL BOARD, COMPOSITE LAYOUT | D-HH-Z-41720 |
| S.E. ENGINEERING ELEMENTARY, SHEET 4 OF 5 | D-HH-Z-57435 |
| S.E. ENGINEERING ELEMENTARY, SHEET 3 OF 5 | D-HH-Z-57434 |
| S.E. ENGINEERING ELEMENTARY, SHEET 1 OF 5 | D-HH-Z-41721 |
| S.E. INSTRUMENT APPLICATION DIAGRAM | D-HH-Z-40805 |

OAK RIDGE NATIONAL LABORATORY
OPERATED BY
UNION CARBIDE NUCLEAR COMPANY
DIVISION OF UNION CARBIDE CORPORATION
OAK RIDGE, TENNESSEE

LIMITS ON DIMENSIONS UNLESS OTHERWISE SPECIFIED:
FRACTIONS ±
DECIMALS ±
ANGLES ±
SCALE: —

MOLTEN SALT REACTOR EXPERIMENT BLDG. NO. 7503

SAMPLER ENRICHER SYSTEM
ENGINEERING ELEMENTARY DIAGRAM
SHEET 2 OF 5

SUBMITTED | APPROVED | APPROVED | APPROVED

D HH Z 57433 B REV.

I20794RH 606D 4

MICROFILMED

enricher system, engineering elementary schematic – sheet 2.

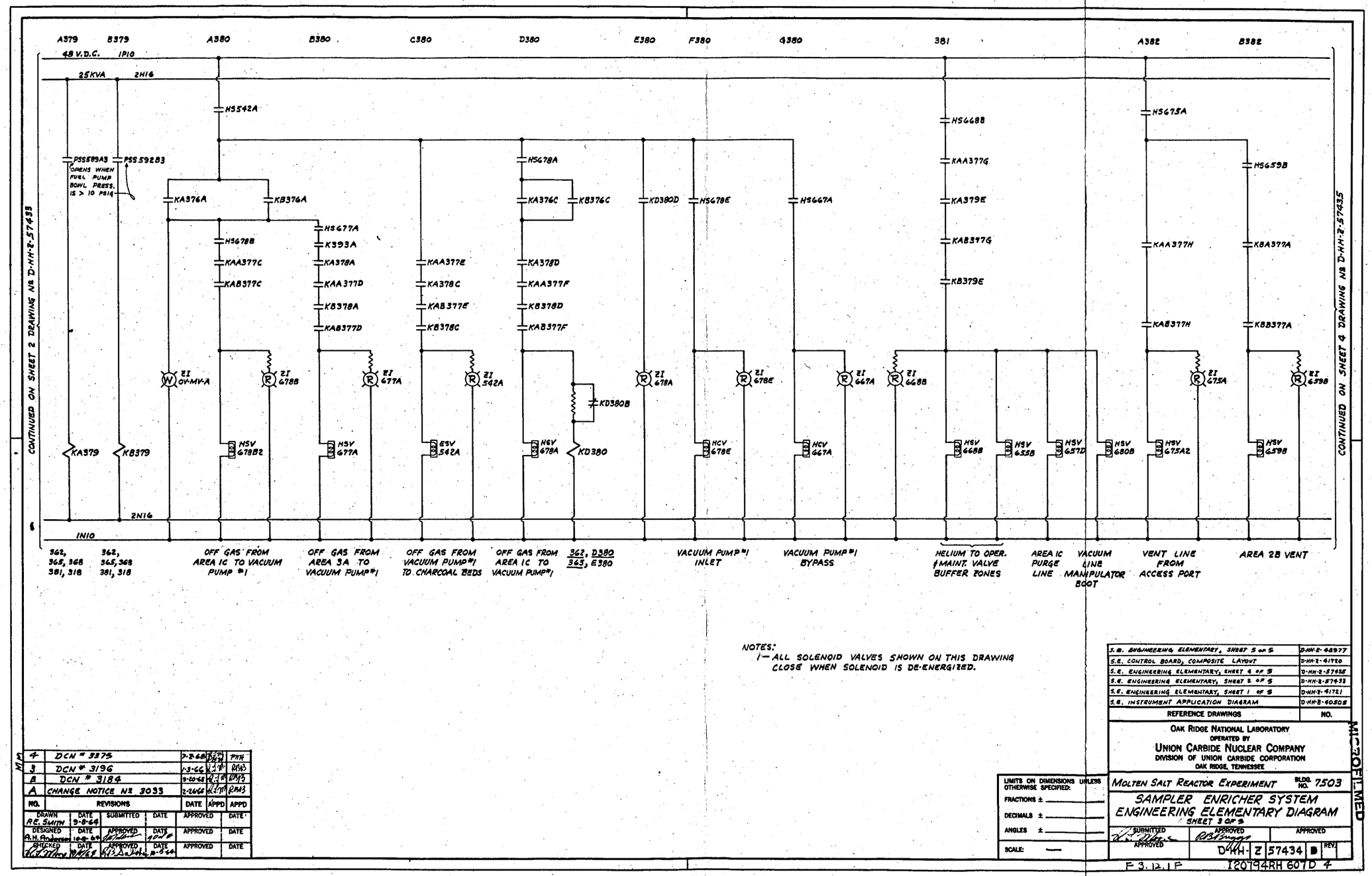


Fig. 3.12.1F. Sampler-enricher system, engineering elementary schematic – sheet 3.

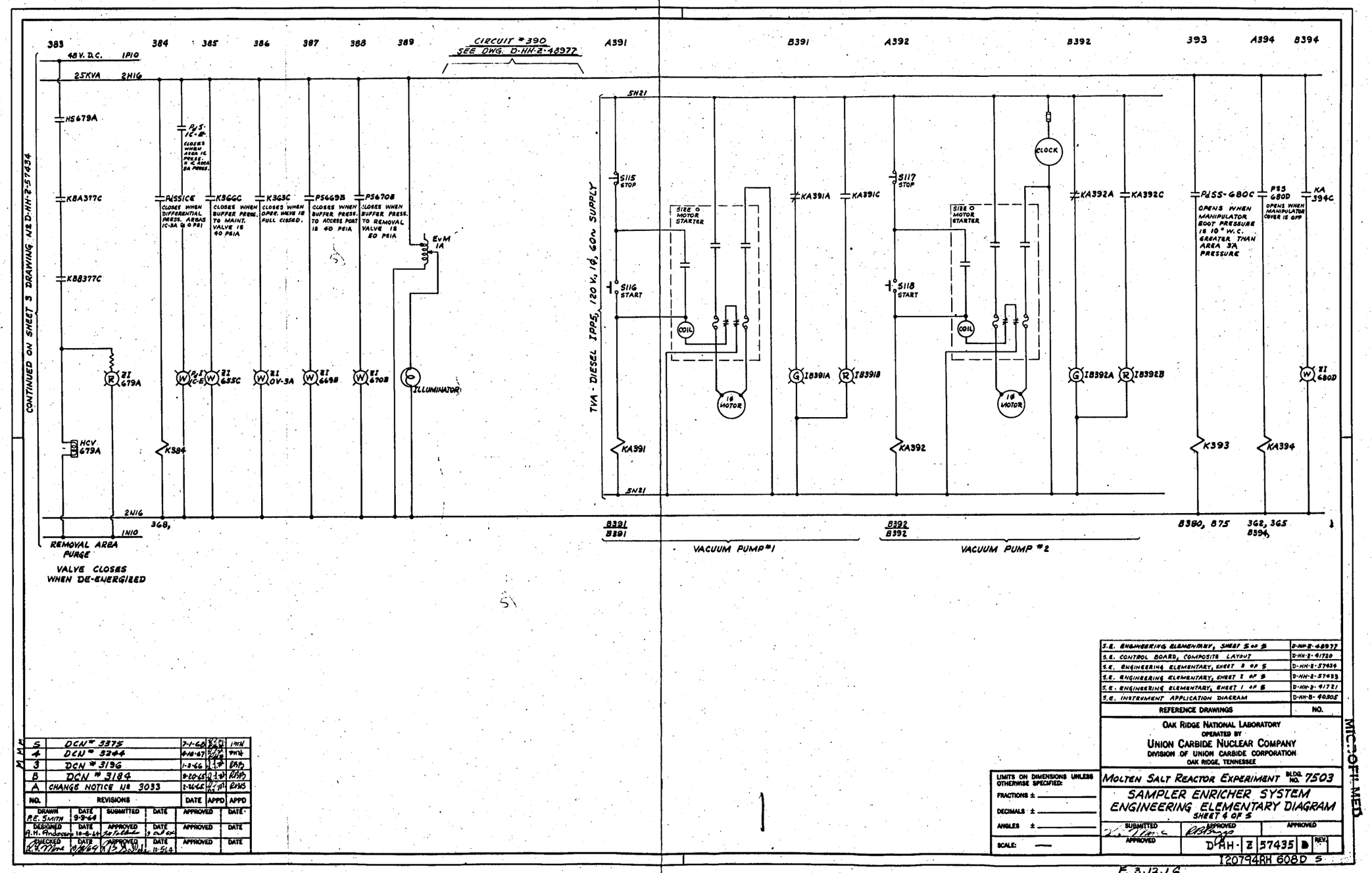


| NO. | REVISIONS | DATE | APPD | APPD |
|---|---|---|---|---|
| 5 | DCN # 3375 | 7-1-68 | | |
| 4 | DCN # 3244 | 4-18-67 | | |
| 3 | DCN # 3196 | 1-8-66 | | |
| B | DCN # 3184 | 9-20-65 | | |
| A | CHANGE NOTICE NO 3033 | 2-26-65 | | |

| DRAWN | DATE | SUBMITTED | DATE | APPROVED | DATE |
|---|---|---|---|---|---|
| R.E. SMITH | 9-9-64 | | | | |
| DESIGNED | DATE | APPROVED | DATE | APPROVED | DATE |
| A.H. Anderson | 10-8-64 | | | | |
| CHECKED | DATE | APPROVED | DATE | APPROVED | DATE |
| | | | 11-5-64 | | |

LIMITS ON DIMENSIONS UNLESS OTHERWISE SPECIFIED:
FRACTIONS ± ____
DECIMALS ± ____
ANGLES ± ____
SCALE: —

| REFERENCE DRAWINGS | NO. |
|---|---|
| S.E. ENGINEERING ELEMENTARY, SHEET 5 OF 5 | D-HH-2-48977 |
| S.E. CONTROL BOARD, COMPOSITE LAYOUT | D-HH-2-41720 |
| S.E. ENGINEERING ELEMENTARY, SHEET 3 OF 5 | D-HH-2-57434 |
| S.E. ENGINEERING ELEMENTARY, SHEET 2 OF 5 | D-HH-2-57433 |
| S.E. ENGINEERING ELEMENTARY, SHEET 1 OF 5 | D-HH-2-41721 |
| S.E. INSTRUMENT APPLICATION DIAGRAM | D-HH-B-40305 |

OAK RIDGE NATIONAL LABORATORY
OPERATED BY
UNION CARBIDE NUCLEAR COMPANY
DIVISION OF UNION CARBIDE CORPORATION
OAK RIDGE, TENNESSEE

MOLTEN SALT REACTOR EXPERIMENT BLDG. NO. 7503

SAMPLER ENRICHER SYSTEM
ENGINEERING ELEMENTARY DIAGRAM
SHEET 4 OF 5

SUBMITTED | APPROVED | APPROVED
APPROVED | D-HH-2 57435 B REV.

I20794RH 608D 5

F 3.12.1G

Fig. 3.12.1G. Sampler-enricher system, engineering elementary schematic – sheet 4.

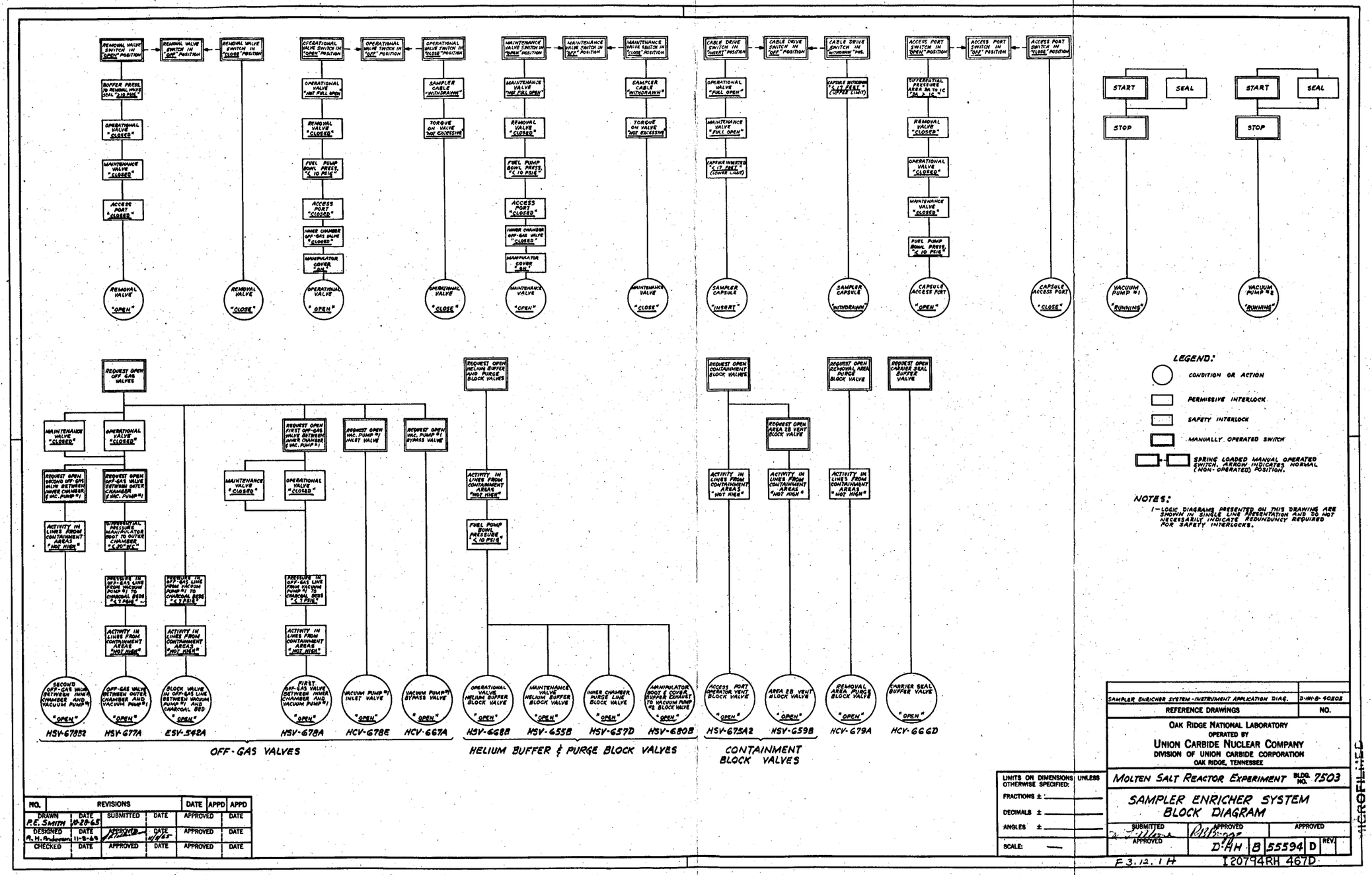


Fig. 3.12.1H. Sampler-enricher system, block diagram.

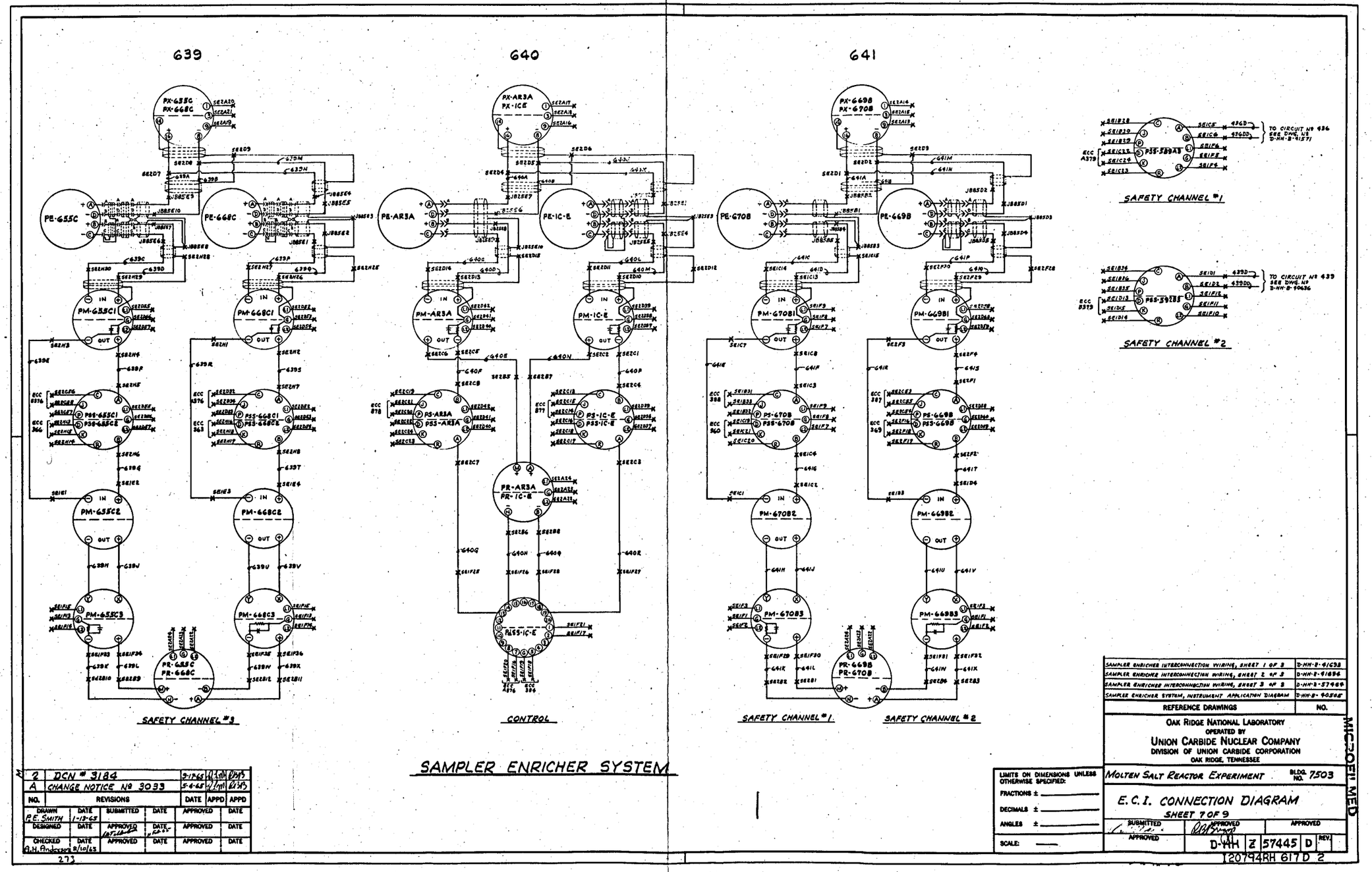


Fig. 3.12.1J. Sampler-enricher system, ECI connection diagram, sheet 7 of 9.

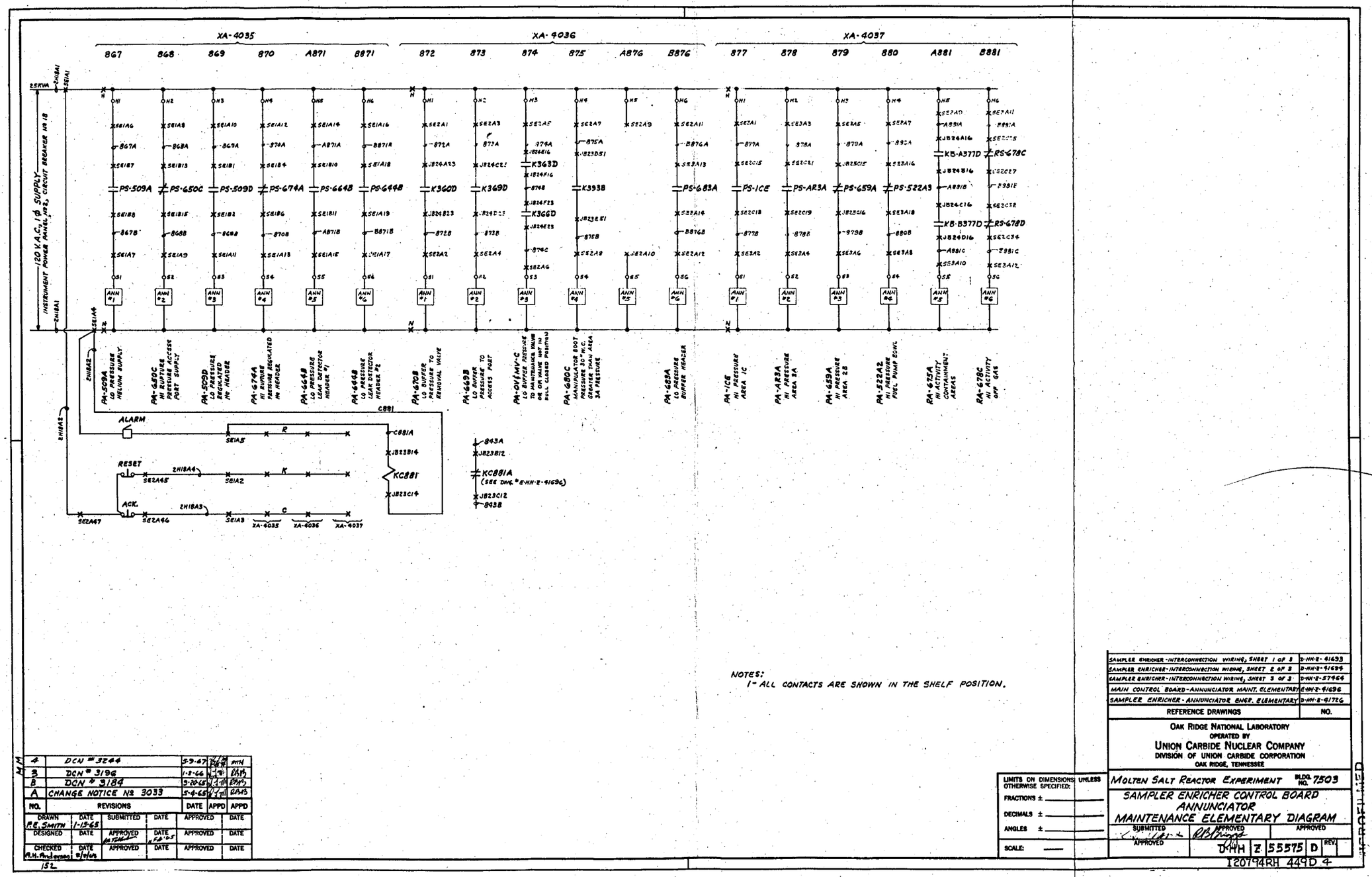


NOTES:
1- ALL CONTACTS ARE SHOWN IN THE SHELF POSITION.

| | | | | | |
|---|---|---|---|---|---|
| 4 | DCN # 3244 | 5-9-67 | | MM | |
| 3 | DCN # 3196 | 1-3-66 | | | |
| 2 | DCN # 3184 | 5-20-65 | | | |
| A | CHANGE NOTICE No 3033 | 5-4-65 | | | |
| NO. | REVISIONS | DATE | APPD | APPD | |

| | | | | | |
|---|---|---|---|---|---|
| DRAWN F.E. Smith | DATE 1-13-65 | SUBMITTED | DATE | APPROVED | DATE |
| DESIGNED | DATE | APPROVED | DATE | APPROVED | DATE |
| CHECKED A.H. Anderson | DATE 8/9/66 | APPROVED | DATE | APPROVED | DATE |

LIMITS ON DIMENSIONS UNLESS OTHERWISE SPECIFIED:
FRACTIONS ±
DECIMALS ±
ANGLES ±
SCALE:

| | |
|---|---|
| SAMPLER ENRICHER-INTERCONNECTION WIRING, SHEET 1 OF 3 | D-HH-2-41693 |
| SAMPLER ENRICHER-INTERCONNECTION WIRING, SHEET 2 OF 3 | D-HH-2-41694 |
| SAMPLER ENRICHER-INTERCONNECTION WIRING, SHEET 3 OF 3 | D-HH-2-57966 |
| MAIN CONTROL BOARD-ANNUNCIATOR MAINT. ELEMENTARY | E-HH-2-41696 |
| SAMPLER ENRICHER-ANNUNCIATOR ENGR. ELEMENTARY | D-HH-2-41726 |
| REFERENCE DRAWINGS | NO. |

OAK RIDGE NATIONAL LABORATORY
OPERATED BY
UNION CARBIDE NUCLEAR COMPANY
DIVISION OF UNION CARBIDE CORPORATION
OAK RIDGE, TENNESSEE

MOLTEN SALT REACTOR EXPERIMENT BLDG. NO. 7503

SAMPLER ENRICHER CONTROL BOARD
ANNUNCIATOR
MAINTENANCE ELEMENTARY DIAGRAM

SUBMITTED APPROVED APPROVED APPROVED

D-HH Z 55575 D REV.

120794RH 449D 4

Fig. 3.12.1K. Sampler-enricher control board annunciator, maintenance elementary diagram.

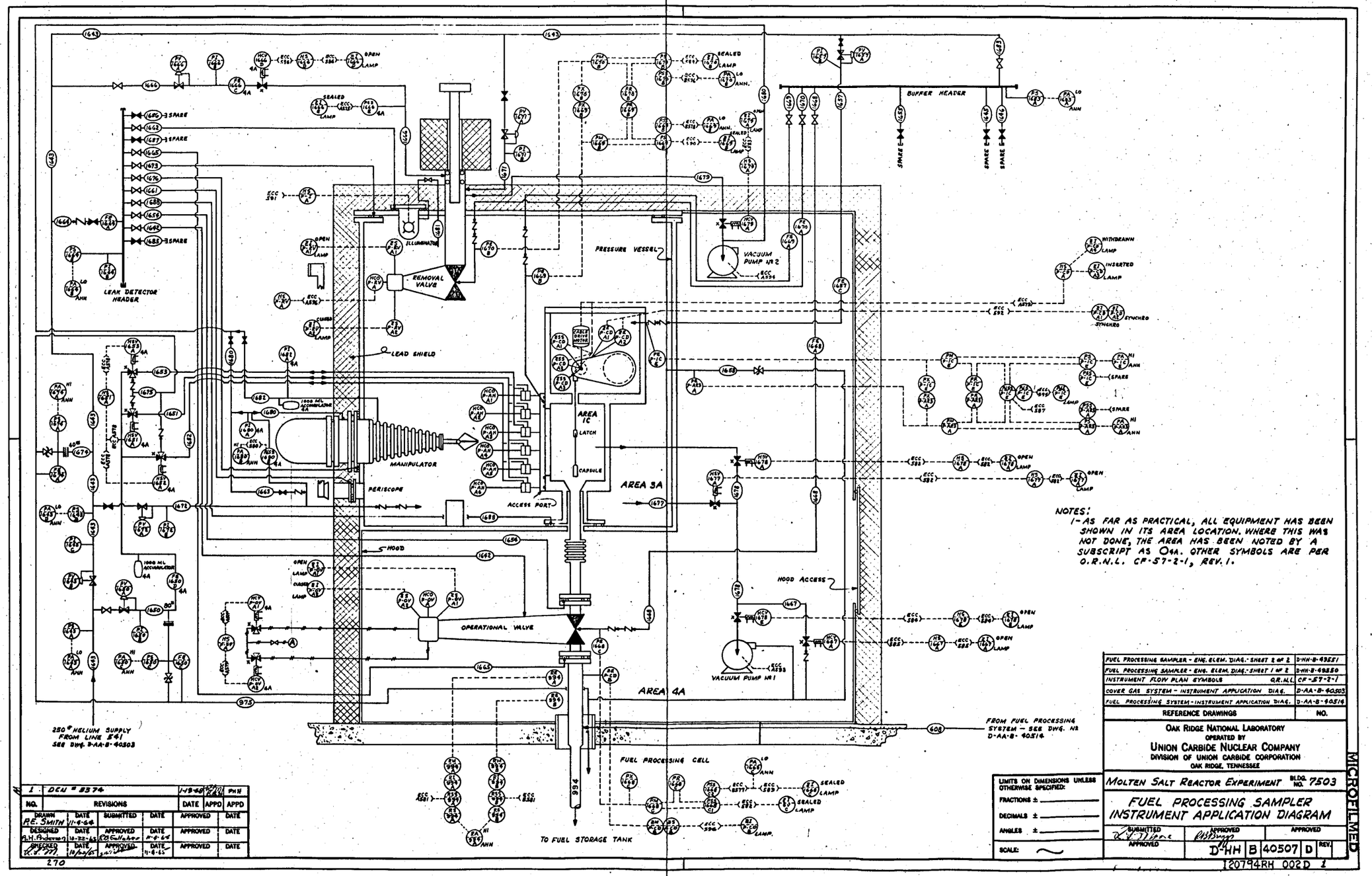


Fig. 3.12.2A. Fuel processing sampler, instrument application diagram.

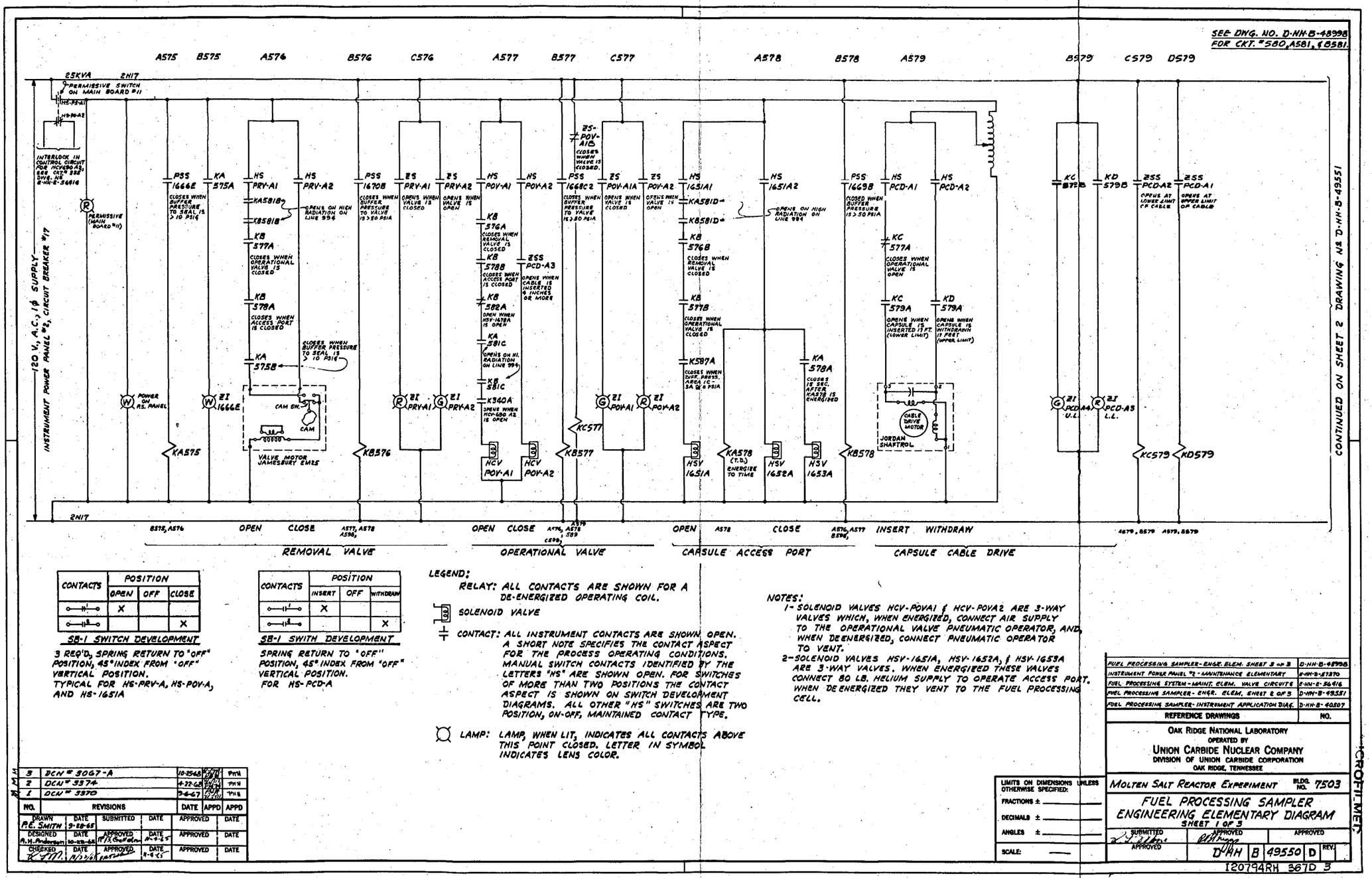


| CONTACTS | POSITION | | |
|---|---|---|---|
| | OPEN | OFF | CLOSE |
| | X | | |
| | | | X |

SB-1 SWITCH DEVELOPMENT

3 REQ'D, SPRING RETURN TO "OFF" POSITION, 45° INDEX FROM "OFF" VERTICAL POSITION. TYPICAL FOR HS-PRV-A, HS-POV-A, AND HS-1651A

| CONTACTS | POSITION | | |
|---|---|---|---|
| | INSERT | OFF | WITHDRAW |
| | X | | |
| | | | X |

SB-1 SWITH DEVELOPMENT

SPRING RETURN TO "OFF" POSITION, 45° INDEX FROM "OFF" VERTICAL POSITION. FOR HS-PCD-A

LEGEND:

RELAY: ALL CONTACTS ARE SHOWN FOR A DE-ENERGIZED OPERATING COIL.

SOLENOID VALVE

CONTACT: ALL INSTRUMENT CONTACTS ARE SHOWN OPEN. A SHORT NOTE SPECIFIES THE CONTACT ASPECT FOR THE PROCESS OPERATING CONDITIONS. MANUAL SWITCH CONTACTS IDENTIFIED BY THE LETTERS "HS" ARE SHOWN OPEN. FOR SWITCHES OF MORE THAN TWO POSITIONS THE CONTACT ASPECT IS SHOWN ON SWITCH DEVELOPMENT DIAGRAMS. ALL OTHER "HS" SWITCHES ARE TWO POSITION, ON-OFF, MAINTAINED CONTACT TYPE.

LAMP: LAMP, WHEN LIT, INDICATES ALL CONTACTS ABOVE THIS POINT CLOSED. LETTER IN SYMBOL INDICATES LENS COLOR.

NOTES:

1- SOLENOID VALVES HCV-POVA1 & HCV-POVA2 ARE 3-WAY VALVES WHICH, WHEN ENERGIZED, CONNECT AIR SUPPLY TO THE OPERATIONAL VALVE PNEUMATIC OPERATOR, AND, WHEN DEENERGIZED, CONNECT PNEUMATIC OPERATOR TO VENT.

2- SOLENOID VALVES HSV-1651A, HSV-1652A, & HSV-1653A ARE 3-WAY VALVES. WHEN ENERGIZED THESE VALVES CONNECT 80 LB. HELIUM SUPPLY TO OPERATE ACCESS PORT. WHEN DEENERGIZED THEY VENT TO THE FUEL PROCESSING CELL.

| NO. | REVISIONS | DATE | APPD | APPD |
|---|---|---|---|---|
| 3 | DCN # 3067-A | 10-25-68 | PMH | |
| 2 | DCN # 3374 | 4-22-68 | PMH | |
| 1 | DCN # 3370 | 3-6-67 | PMH | |

| | | | | | |
|---|---|---|---|---|---|
| DRAWN R.E. SMITH | DATE 9-28-65 | SUBMITTED | DATE | APPROVED | DATE |
| DESIGNED A.N. Anderson | DATE 10-28-65 | APPROVED H.F. Guthrie | DATE 10-28-65 | APPROVED | DATE |
| CHECKED | DATE 11/22/65 | APPROVED | DATE 11-9-65 | APPROVED | DATE |

| | |
|---|---|
| FUEL PROCESSING SAMPLER-ENGR. ELEM. SHEET 3 OF 3 | D-HH-B-48998 |
| INSTRUMENT POWER PANEL #2-MAINTENANCE ELEMENTARY | E-HH-B-81870 |
| FUEL PROCESSING SYSTEM-MAINT. ELEM. VALVE CIRCUITS | E-HH-E-36416 |
| FUEL PROCESSING SAMPLER-ENGR. ELEM. SHEET 2 OF 3 | D-HH-B-49551 |
| FUEL PROCESSING SAMPLER-INSTRUMENT APPLICATION DIAG. | D-HH-B-40507 |
| REFERENCE DRAWINGS | NO. |

OAK RIDGE NATIONAL LABORATORY
OPERATED BY
UNION CARBIDE NUCLEAR COMPANY
DIVISION OF UNION CARBIDE CORPORATION
OAK RIDGE, TENNESSEE

LIMITS ON DIMENSIONS UNLESS OTHERWISE SPECIFIED:
FRACTIONS ±
DECIMALS ±
ANGLES ±
SCALE:

MOLTEN SALT REACTOR EXPERIMENT BLDG. NO. 7503

FUEL PROCESSING SAMPLER
ENGINEERING ELEMENTARY DIAGRAM
SHEET 1 OF 3

SUBMITTED APPROVED APPROVED APPROVED

D HH B 49550 D REV.

120794RH 367D 3

MICROFILMED

Fig. 3.12.2B. Fuel processing sampler, engineering elementary diagram, sheet 1.

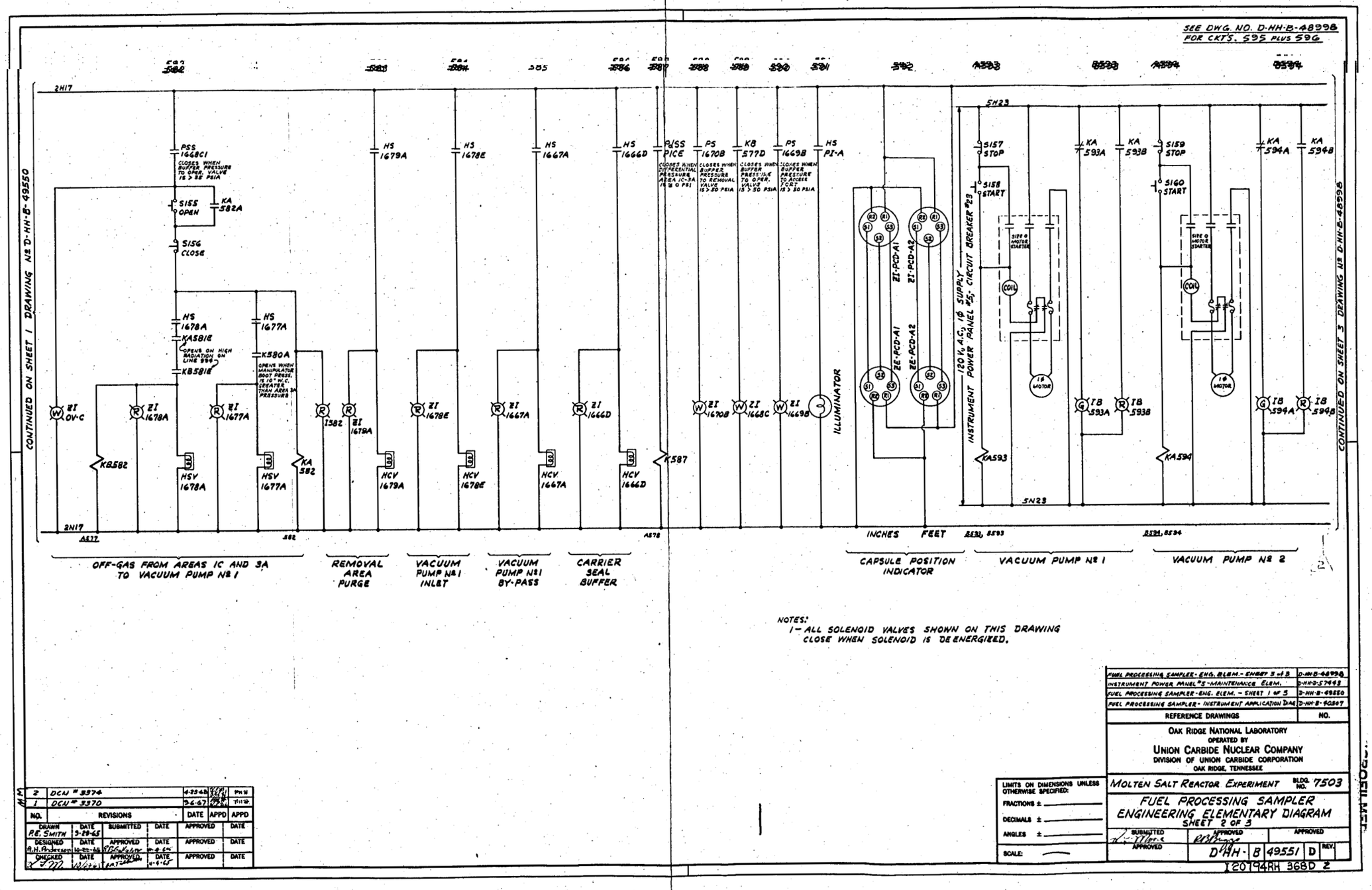


Fig. 3.12.2C. Fuel processing sampler, engineering elementary diagram, sheet 2.

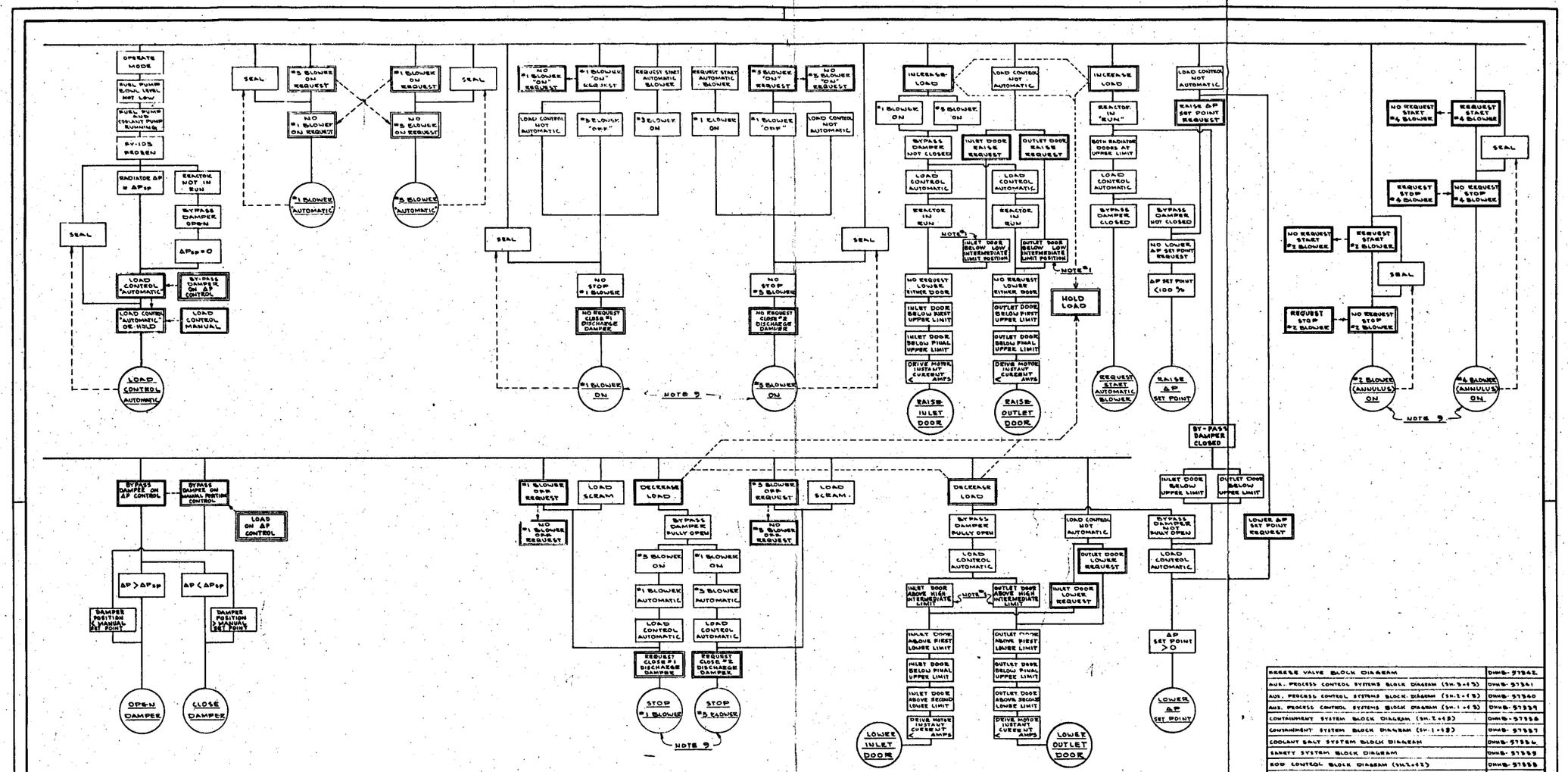


**NOTE:**

(1) Middle Limit Position will be preset to correspond to 1 MW power with one blower ON.
(2) Automatic Control Sequence is as follows:
(a) Start reactor and take power to approximately 1 MW.
(b) Place Bypass Damper Control in Automatic Position
(c) Lower ΔP setpoint to zero
(d) Start either blower (bypass damper will automatically move to full open position and the other blower will automatically be selected for automatic operation)
(e) Switch Load Control Mode switch to "Automatic" position (load control will seal in to automatic position)
(f) Turn Load Demand switch to "Increase Load" position. Doors will raise until stopped by mid-limit. (Power should increase to approximately 1 MW)
(g) Push "Run Mode ON" pushbutton. If conditions are satisfactory, run mode circuits will seal in, switching rod control from flux to temperature servo and permitting power operation above 1 MW.
(h) Turn Load Demand switch to "Increase Load" position. Doors will raise and power will increase. Bypass damper will remain open since ΔP setpoint is zero. When doors reach upper limit, the ΔP setpoint will automatically increase (raise). When the ΔP equals setpoint the bypass damper will start to close. Continued request for load increase will cause further increase in ΔP setpoint. The damper will be positioned to maintain ΔP at setpoint and will close as the setpoint increases. Reactor power will increase as the ΔP increases. When the damper reaches its closed position, the second blower will start automatically. As the blower speed increases, the bypass damper will automatically open to maintain the ΔP at setpoint. Continued request for load increase will result in further increase in ΔP setpoint with a resultant increase in reactor power. Full power (10 MW operation) will be reached when the bypass damper is fully closed.
(i) The above sequence may be stopped at any point by returning the Load Demand switch to its neutral (Hold) position and may be reversed (decreasing power) by turning load demand switch to its "Decrease" position.
(3) Once Automatic load control operation is attained, the reactor power can be varied between 1 and 10 MW by operation of the load demand switch.
(4) When both blowers are "ON" the selection of the "Automatic" blower may be changed by pushing the "ON" button of the desired blower.
(5) The load may be increased manually and then switched to automatic control by adjusting the ΔP setpoint to match the existing ΔP and switching load control mode switch to automatic.
(6) Load set back produces same action as decrease load.
(7) Load scram drops radiator doors and stops fans.

(9) SEE D-HH-B-57541 FOR OPERATION OF BLOWER BACK FLOW DAMPERS.

| NO. | REVISIONS | DATE | APPD | APPD |
|---|---|---|---|---|
| 4 | DCN # 3370 | 8-7-67 | | TWH |
| 3 | D.C.N. # 3067 | 2-8-66 | | |
| D | CHANGE NOTICE Nº 3050 | 4-1-65 | | |
| A | CHANGE NOTICE NO. 2787 | 6-20-64 | | |

| DRAWN | DATE | SUBMITTED | DATE | APPROVED | DATE |
|---|---|---|---|---|---|
| B.J.J. | 7-12-63 | | | | |
| DESIGNED | DATE | APPROVED | DATE | APPROVED | DATE |
| | | | | | |
| CHECKED | DATE | APPROVED | DATE | APPROVED | DATE |
| | | | | | |

| REFERENCE DRAWINGS | NO. |
|---|---|
| FREEZE VALVE BLOCK DIAGRAM | DHHB-57342 |
| AUX. PROCESS CONTROL SYSTEMS BLOCK DIAGRAM (SH.3 of 3) | DHHB-57341 |
| AUX. PROCESS CONTROL SYSTEMS BLOCK DIAGRAM (SH.2 of 3) | DHHB-57340 |
| AUX. PROCESS CONTROL SYSTEMS BLOCK DIAGRAM (SH.1 of 3) | DHHB-57339 |
| CONTAINMENT SYSTEM BLOCK DIAGRAM (SH.2 of 3) | DHHB-57338 |
| CONTAINMENT SYSTEM BLOCK DIAGRAM (SH.1 of 3) | DHHB-57337 |
| COOLANT SALT SYSTEM BLOCK DIAGRAM | DHHB-57336 |
| SAFETY SYSTEM BLOCK DIAGRAM | DHHB-57335 |
| ROD CONTROL BLOCK DIAGRAM (SH.2 of 2) | DHHB-57333 |
| ROD CONTROL BLOCK DIAGRAM (SH.1 of 2) | DHHB-57332 |
| MASTER CONTROL BLOCK DIAGRAM (SH.2 of 2) | DHHB-57331 |
| MASTER CONTROL BLOCK DIAGRAM (SH.1 of 2) | DHHB-57330 |

LIMITS ON DIMENSIONS UNLESS OTHERWISE SPECIFIED:
FRACTIONS ±
DECIMALS ±
ANGLES ±
SCALE: NONE

OAK RIDGE NATIONAL LABORATORY
OPERATED BY
UNION CARBIDE NUCLEAR COMPANY
DIVISION OF UNION CARBIDE CORPORATION
OAK RIDGE, TENNESSEE

MOLTEN SALT REACTOR EXPERIMENT BLOCK DIAGRAM — BLDG. NO. 7503

RADIATOR LOAD CONTROL SYSTEM BLOCK DIAGRAM

SUBMITTED | APPROVED | APPROVED

DHH B 57334 D REV.

120794RH 51ID 4

MICROFILMED

Fig. 3.12.2D. Fuel processing sampler, block diagram.

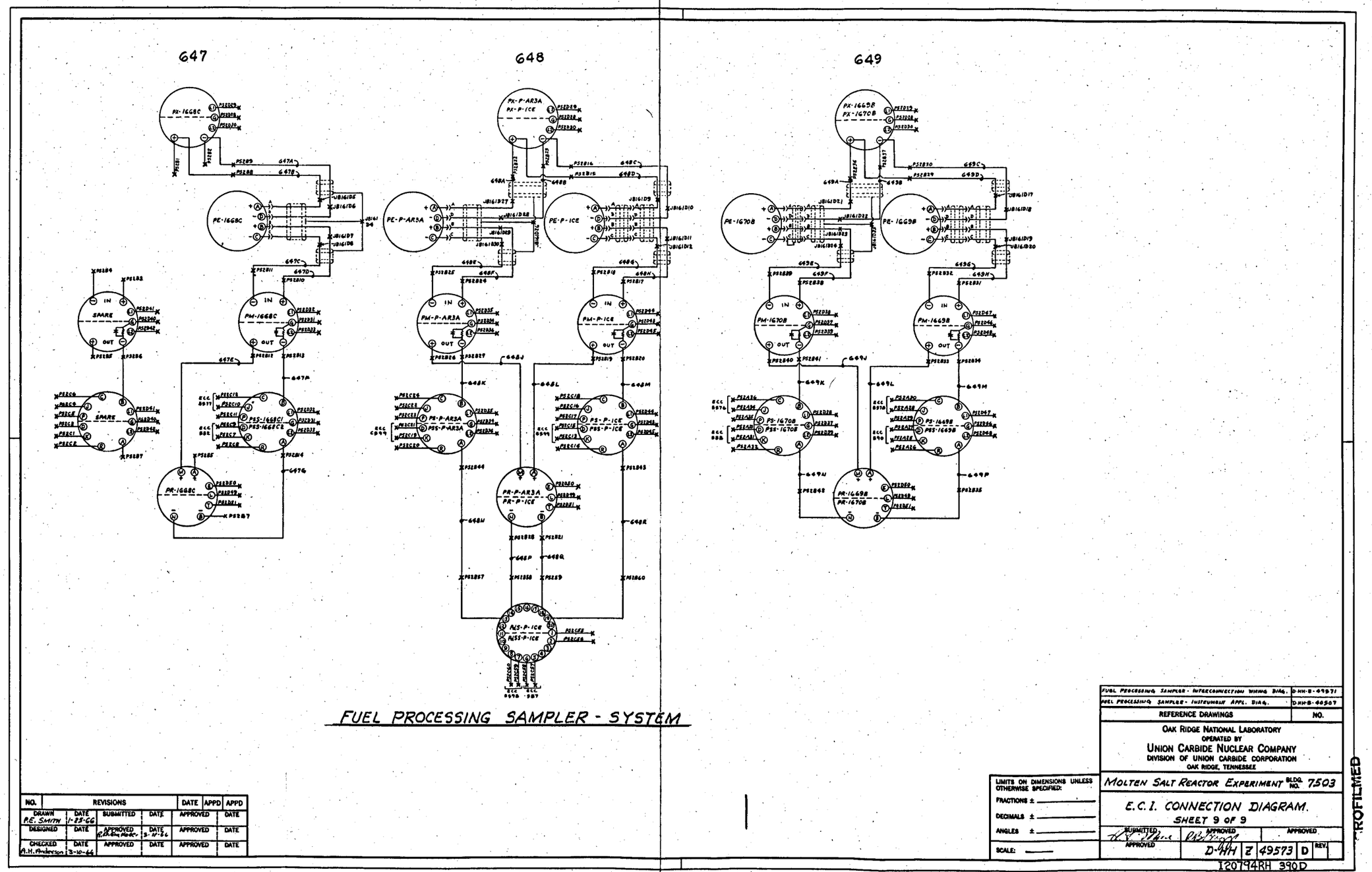


Fig. 3.12.2E. Fuel processing sampler, ECI connection diagram, sheet 9 of 9.

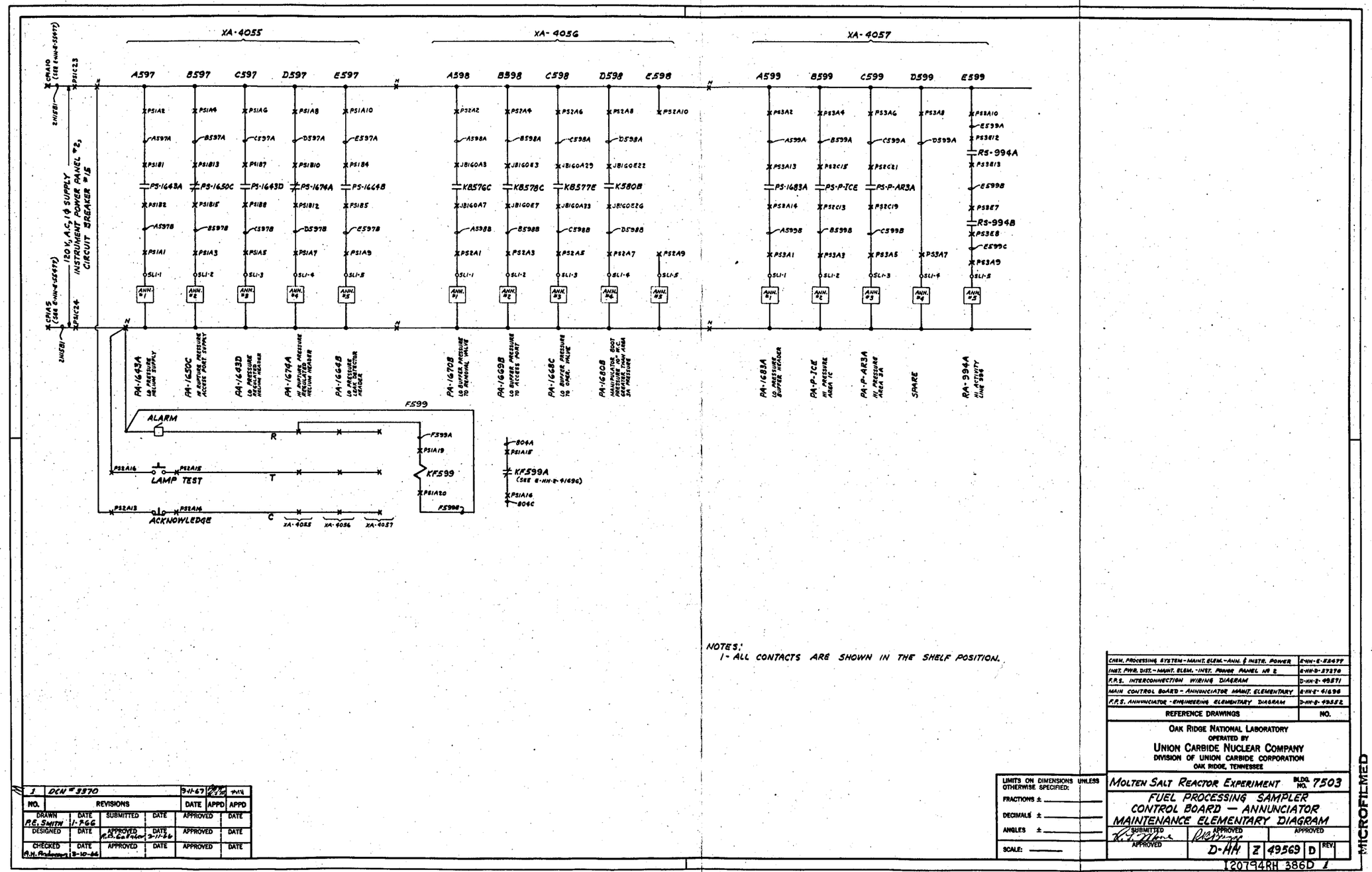


NOTES:
1- ALL CONTACTS ARE SHOWN IN THE SHELF POSITION.

| NO. | REVISIONS | DATE | APPD | APPD |
|---|---|---|---|---|
| 1 | DCN # 3370 | 9-11-67 | | |

| DRAWN | DATE | SUBMITTED | DATE | APPROVED | DATE |
|---|---|---|---|---|---|
| R.E. Smith | 1-P66 | | | | |
| DESIGNED | DATE | APPROVED | DATE | APPROVED | DATE |
| | | R.P. Carter | 2-11-66 | | |
| CHECKED | DATE | APPROVED | DATE | APPROVED | DATE |
| A.H. Anderson | 3-10-66 | | | | |

| | |
|---|---|
| CHEM. PROCESSING SYSTEM - MAINT. ELEM. - ANN. & INSTR. POWER | E-HH-E-25477 |
| INST. PWR. DIST. - MAINT. ELEM. - INST. POWER PANEL NO 2 | E-HH-D-27270 |
| F.P.S. INTERCONNECTION WIRING DIAGRAM | D-HH-2-49571 |
| MAIN CONTROL BOARD - ANNUNCIATOR MAINT. ELEMENTARY | E-HH-E-41696 |
| F.P.S. ANNUNCIATOR - ENGINEERING ELEMENTARY DIAGRAM | D-HH-2-49552 |
| REFERENCE DRAWINGS | NO. |

OAK RIDGE NATIONAL LABORATORY
OPERATED BY
UNION CARBIDE NUCLEAR COMPANY
DIVISION OF UNION CARBIDE CORPORATION
OAK RIDGE, TENNESSEE

LIMITS ON DIMENSIONS UNLESS OTHERWISE SPECIFIED:
FRACTIONS ±
DECIMALS ±
ANGLES ±
SCALE:

MOLTEN SALT REACTOR EXPERIMENT BLDG. NO. 7503

FUEL PROCESSING SAMPLER
CONTROL BOARD — ANNUNCIATOR
MAINTENANCE ELEMENTARY DIAGRAM

SUBMITTED APPROVED | APPROVED | APPROVED

D-HH | Z | 49569 | D | REV.

120794RH 386D 1

MICROFILMED

Fig. 3.12.2F. Fuel processing sampler, control board annunciator, maintenance elementary diagram.

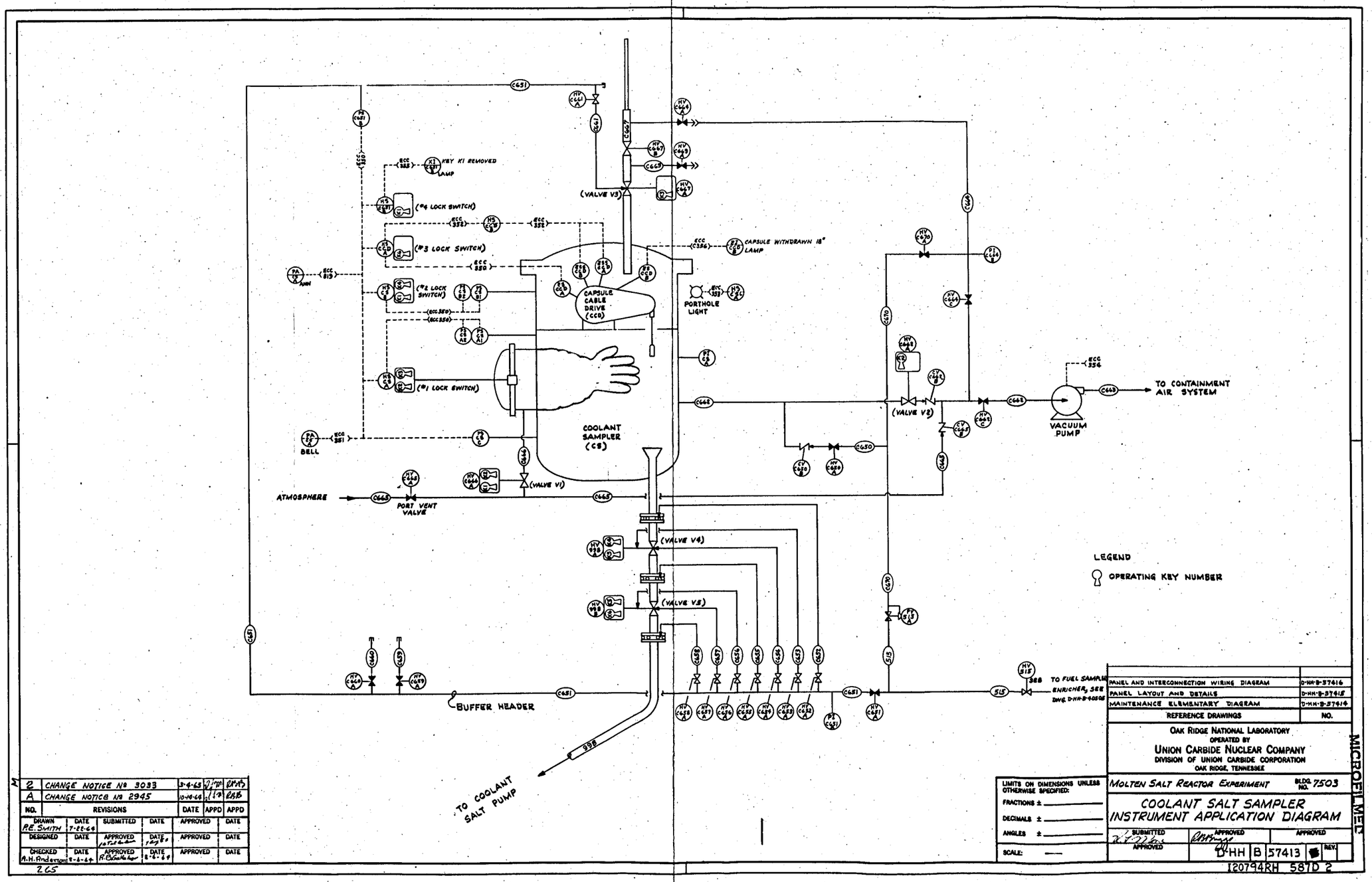


Fig. 3.12.3A. Coolant-salt sampler, instrument application diagram.

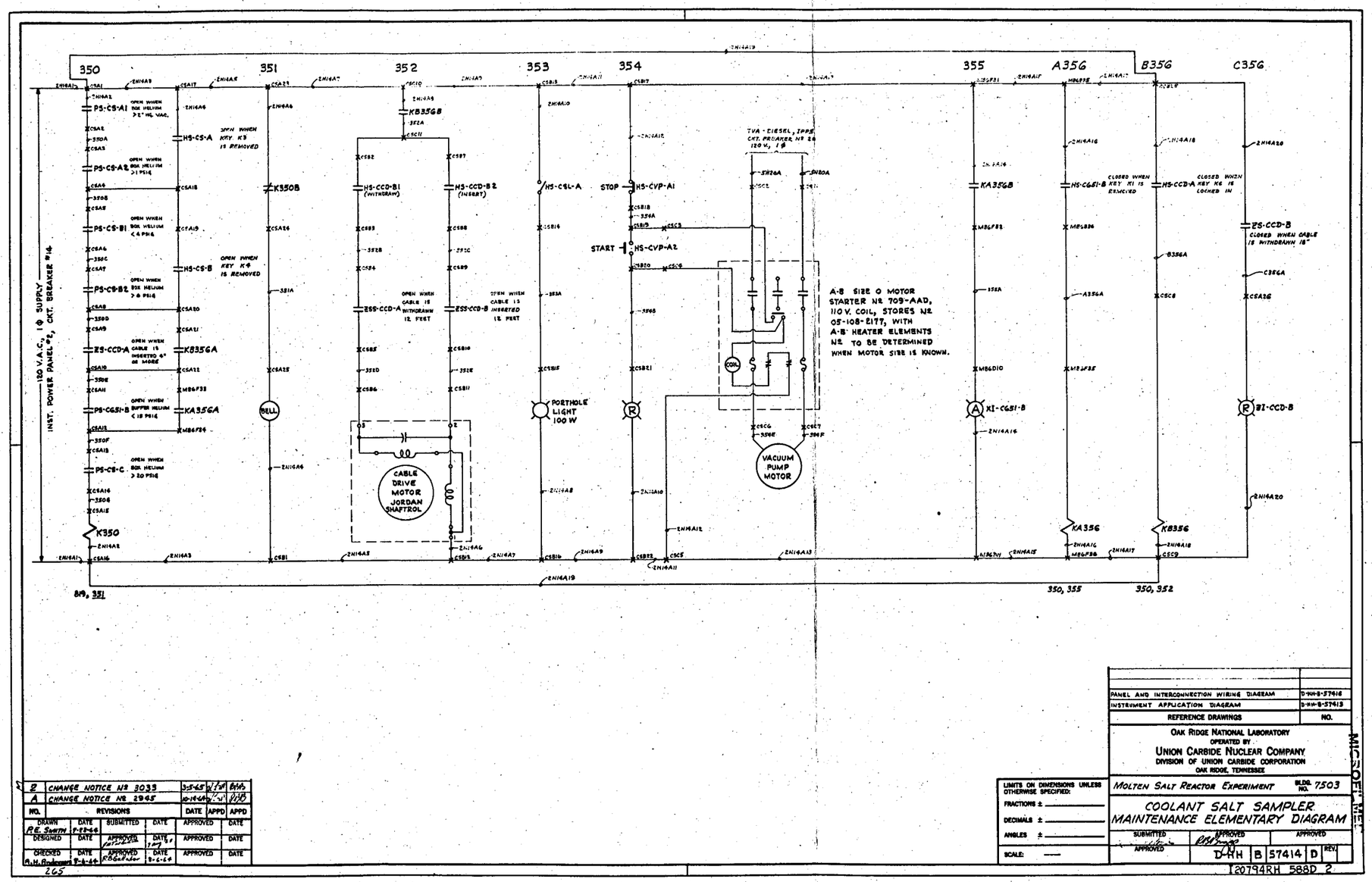


| NO. | REVISIONS | DATE | APPD | APPD |
|---|---|---|---|---|
| 2 | CHANGE NOTICE Nº 3033 | 3-5-65 | | |
| A | CHANGE NOTICE Nº 2965 | 10-14-64 | | |

| | | | | | |
|---|---|---|---|---|---|
| DRAWN R.E. Smith | DATE 7-22-64 | SUBMITTED | DATE | APPROVED | DATE |
| DESIGNED | DATE | APPROVED | DATE | APPROVED | DATE |
| CHECKED R.H. Robison | DATE 7-8-64 | APPROVED R.C. Gaertner | DATE 8-6-64 | APPROVED | DATE |

LIMITS ON DIMENSIONS UNLESS OTHERWISE SPECIFIED:
FRACTIONS ±
DECIMALS ±
ANGLES ±
SCALE: ——

| REFERENCE DRAWINGS | NO. |
|---|---|
| PANEL AND INTERCONNECTION WIRING DIAGRAM | D-HH-B-57416 |
| INSTRUMENT APPLICATION DIAGRAM | D-HH-B-57413 |

OAK RIDGE NATIONAL LABORATORY
OPERATED BY
UNION CARBIDE NUCLEAR COMPANY
DIVISION OF UNION CARBIDE CORPORATION
OAK RIDGE, TENNESSEE

MOLTEN SALT REACTOR EXPERIMENT — BLDG. NO. 7503

COOLANT SALT SAMPLER
MAINTENANCE ELEMENTARY DIAGRAM

SUBMITTED — APPROVED — APPROVED

D-HH | B | 57414 | D | REV.

T20794RH 588D 2

Fig. 3.12.3B. Coolant-salt sampler – maintenance elementary diagram.

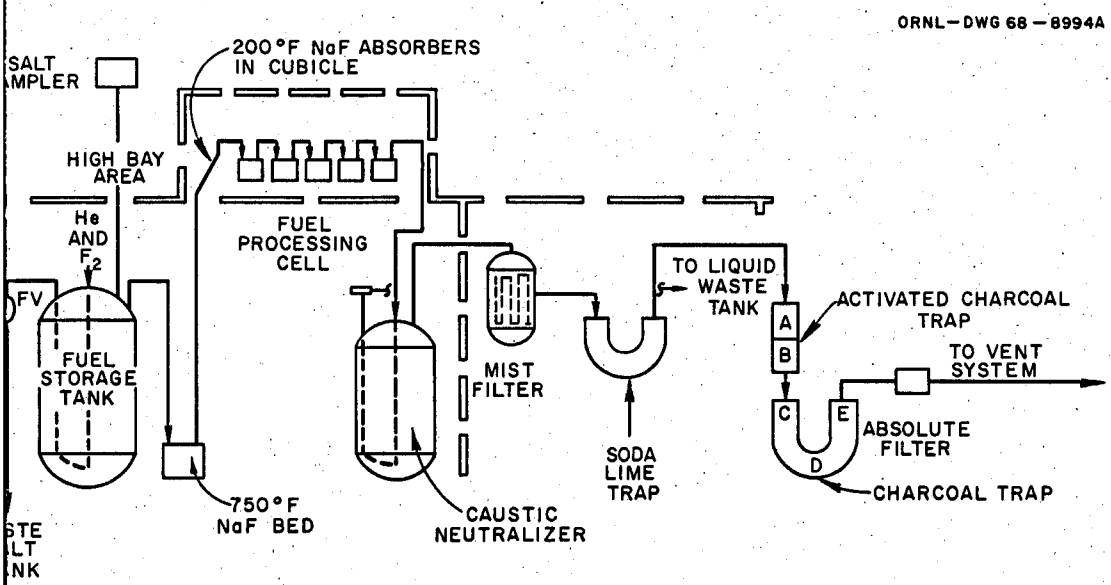


**Fig. 3.13.1. MSRE fuel processing system.**

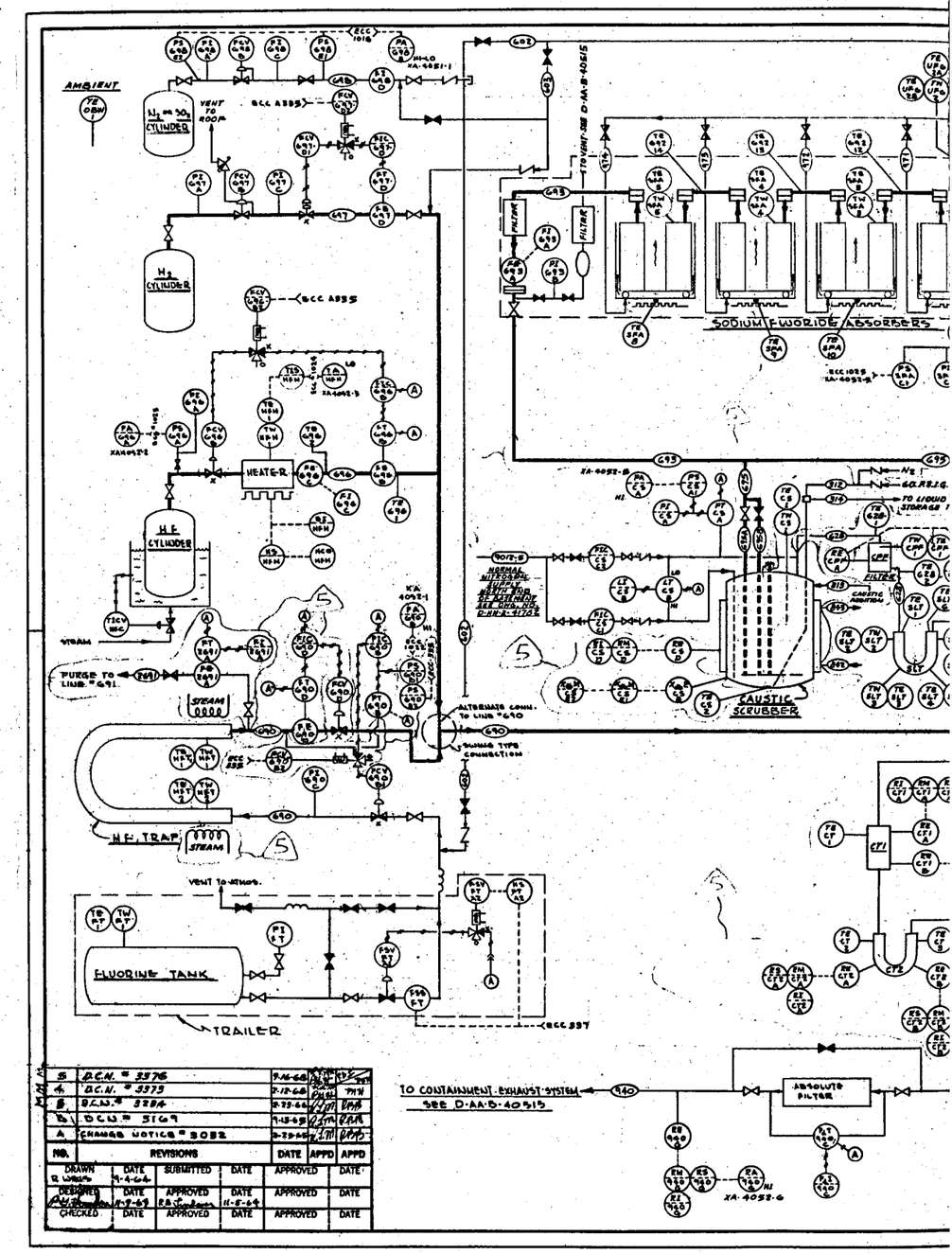
AMBIENT
VENT TO ROOM
CYLINDER
CYLINDER
HEATER
H.F. CYLINDER
STEAM
PURGE TO LINE "691"
STEAM
H.F. TRAP
STEAM
VENT TO HOOD
FLUORINE TANK
TRAILER
SODIUM FLUORIDE ABSORBERS
FILTER
FILTER
NORMAL NITROGEN SUPPLY
SUPPLY WITH ALTERNATE REF. DWG. NO. D-AA-B-40515
CAUSTIC SCRUBBER
ALTERNATE CONN. TO LINE "690"
GAUGE TYPE CONNECTION
TO LIQUID STORAGE
TO CONTAINMENT EXHAUST SYSTEM
SEE D-AA-B-40515
ABSOLUTE FILTER
REVISIONS
DATE
APPD
DRAWN
DATE
SUBMITTED
APPROVED
CHECKED

Fig. 3.13.2.

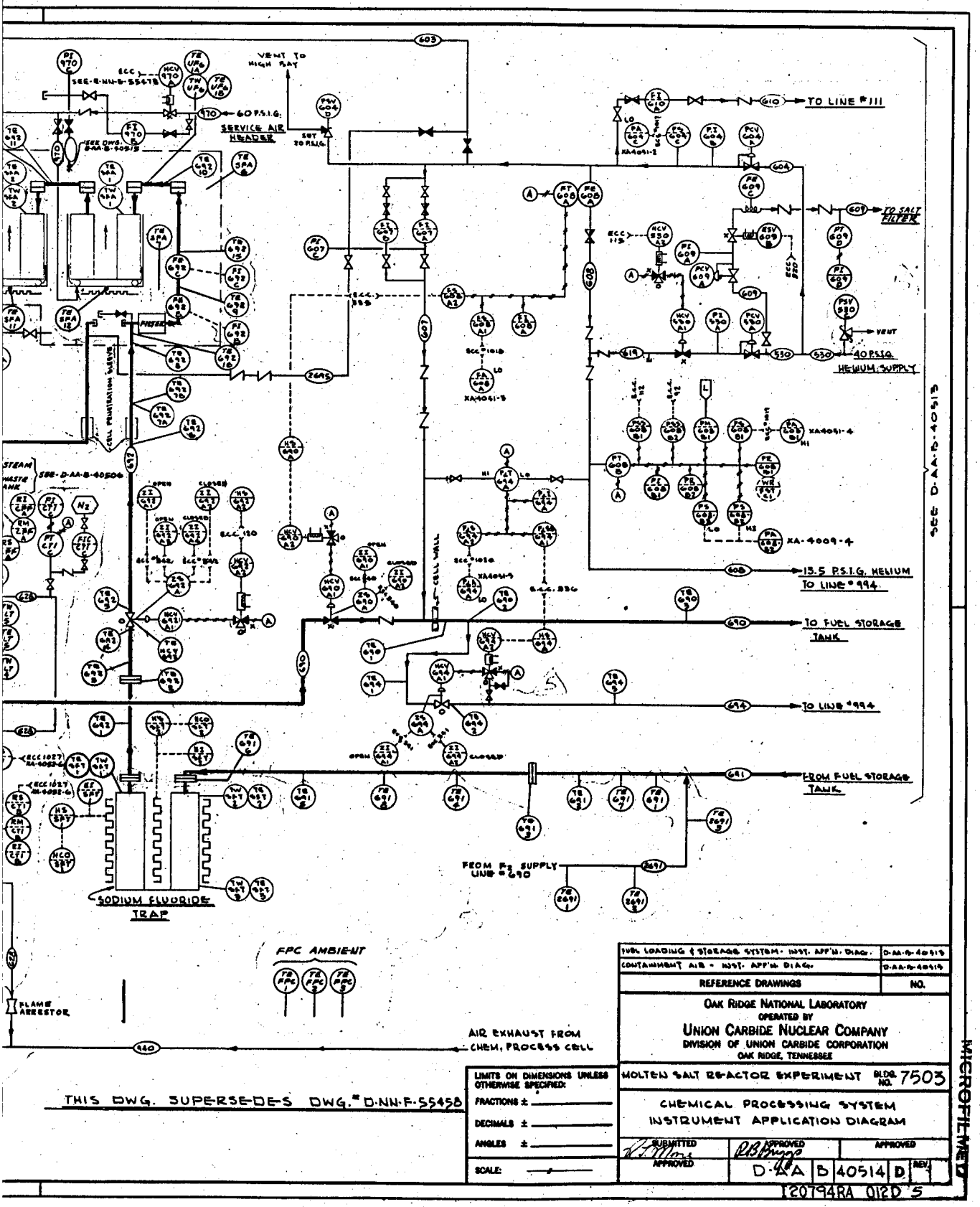


Chemical processing system, instrument application diagram.

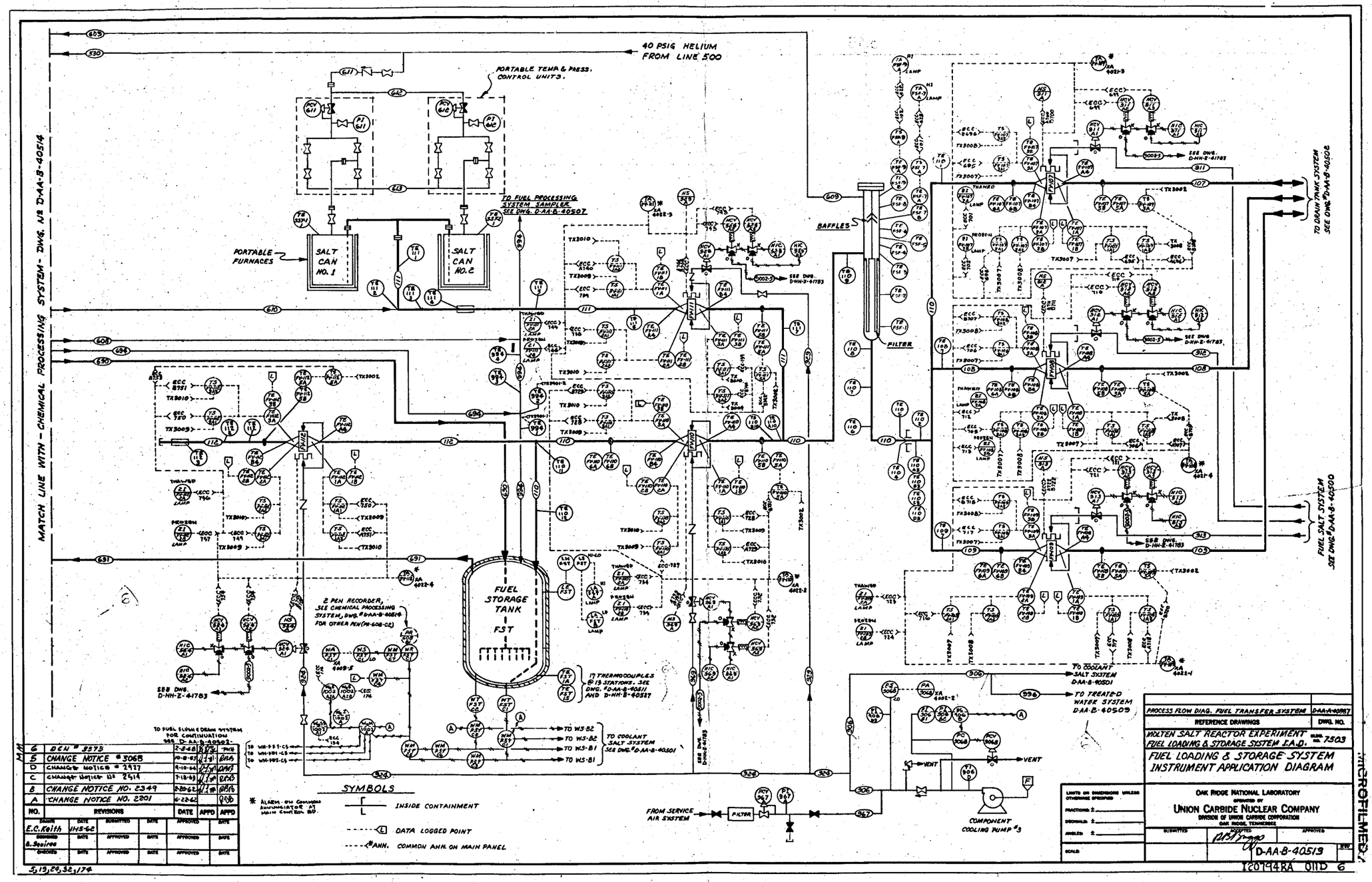


Fig. 3.13.3. Fuel loading and storage system, instrument application diagram.

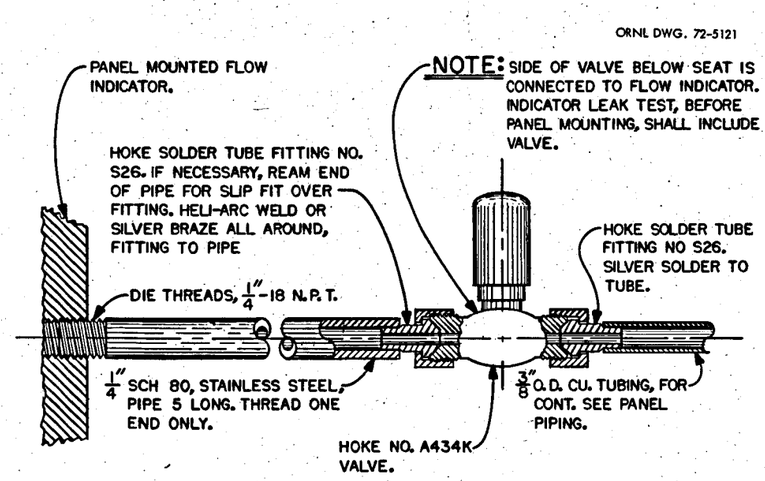


Fig. 3.13.4. Typical solder tube joint connection.

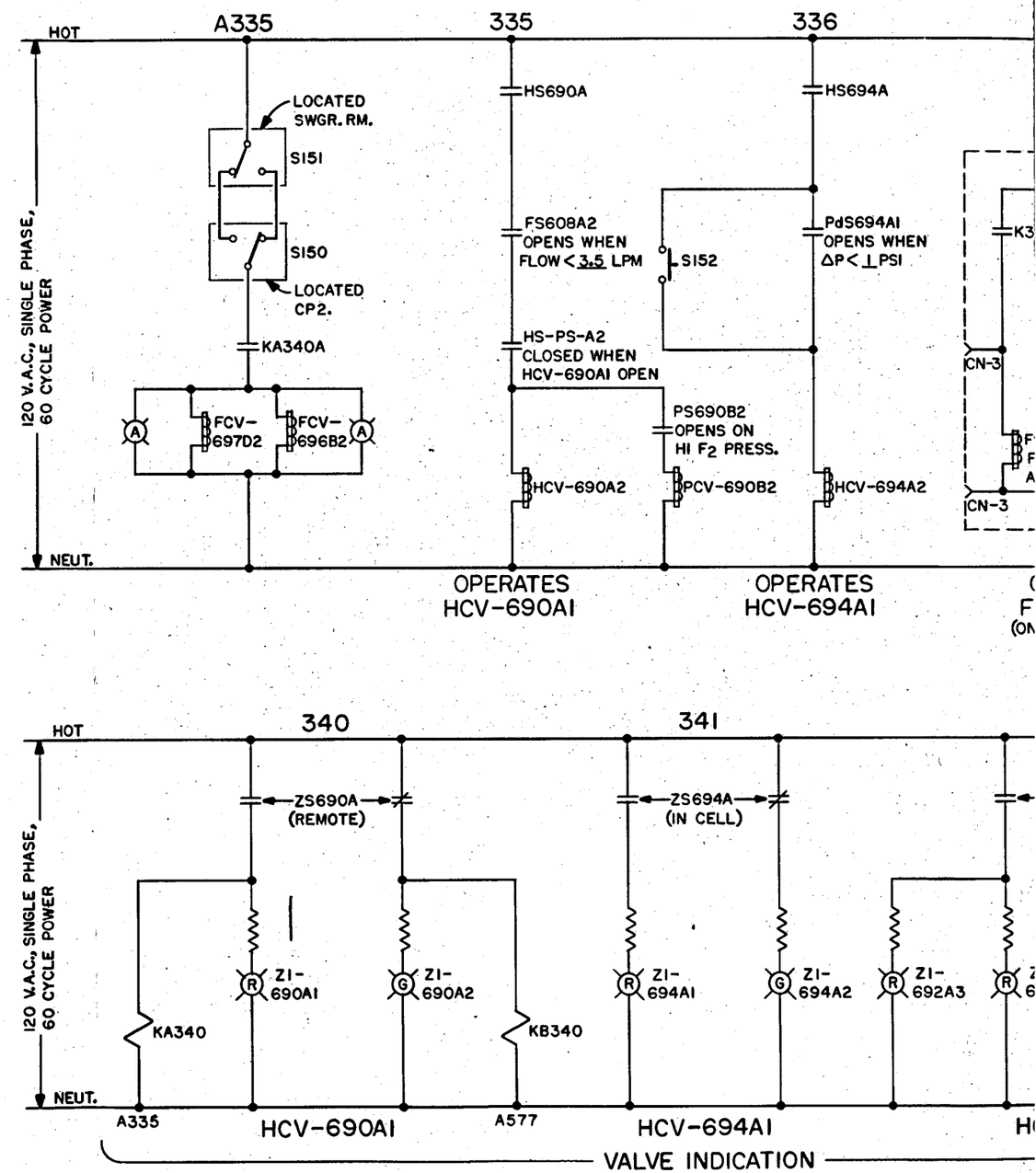


Fig. 3.13.5. Fuel p

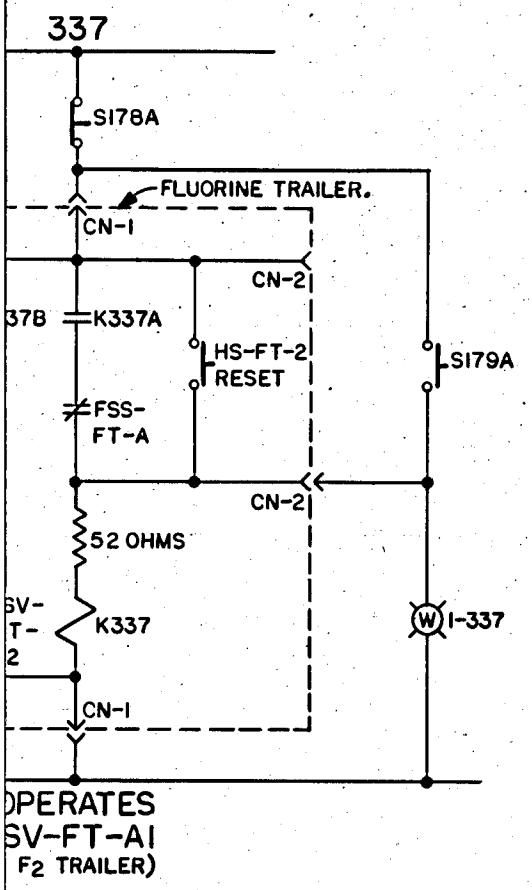


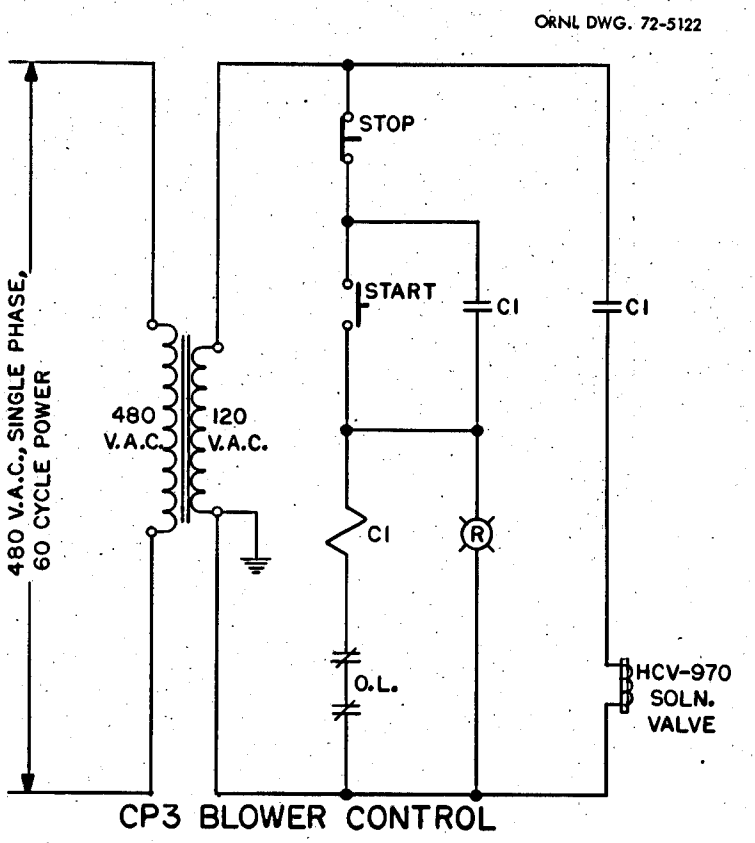


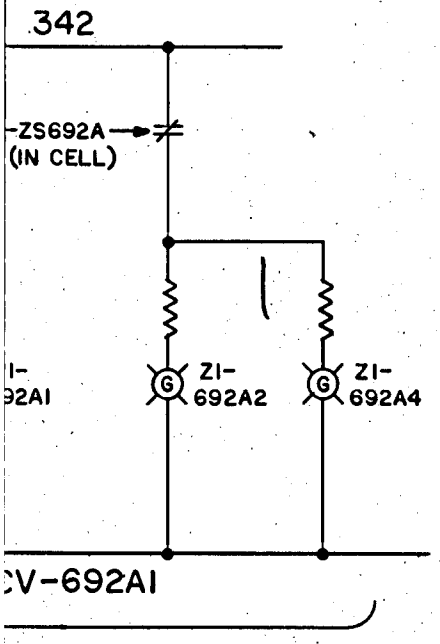


ocessing system, control circuits.

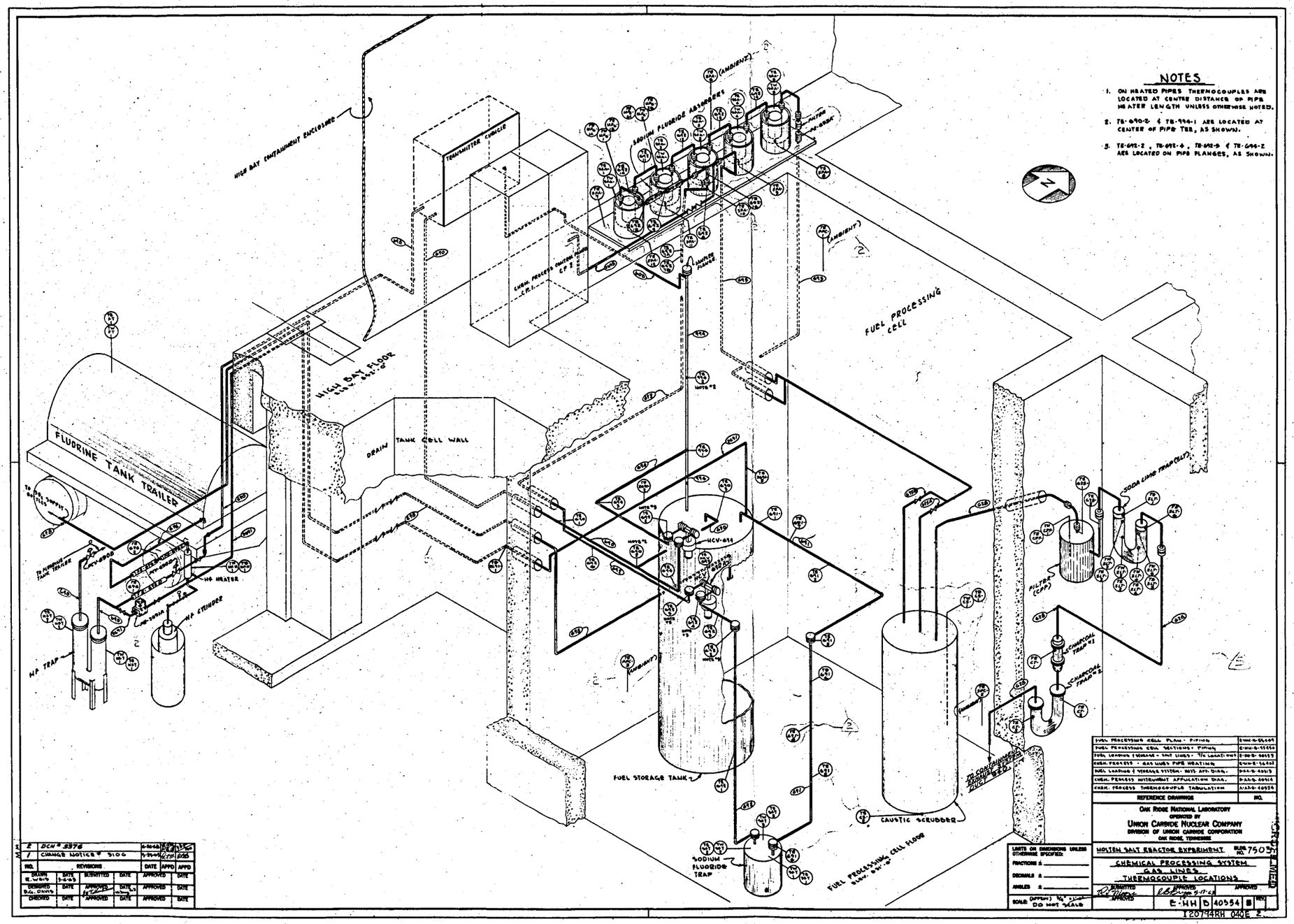


Fig. 3.13.6. Fuel processing system, layout.

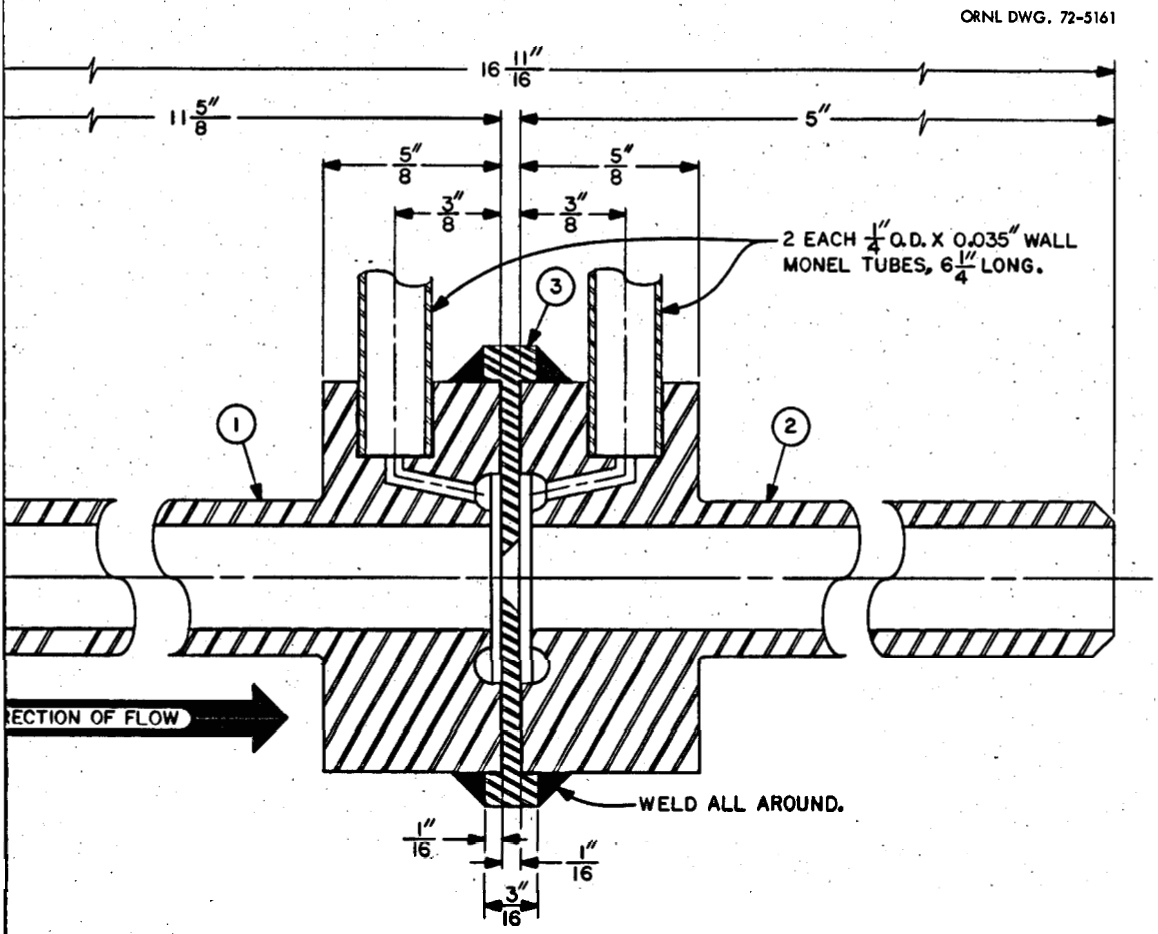


**NOTE:** PARTS NO. 1,2,AND, 3 SHALL BE FABRICATED OF MONEL PER ASTM B-164-49T.

Fig. 3.13.7. Special orifice for measuring very low gas flow rates.

ORNL DWG. 72-5162

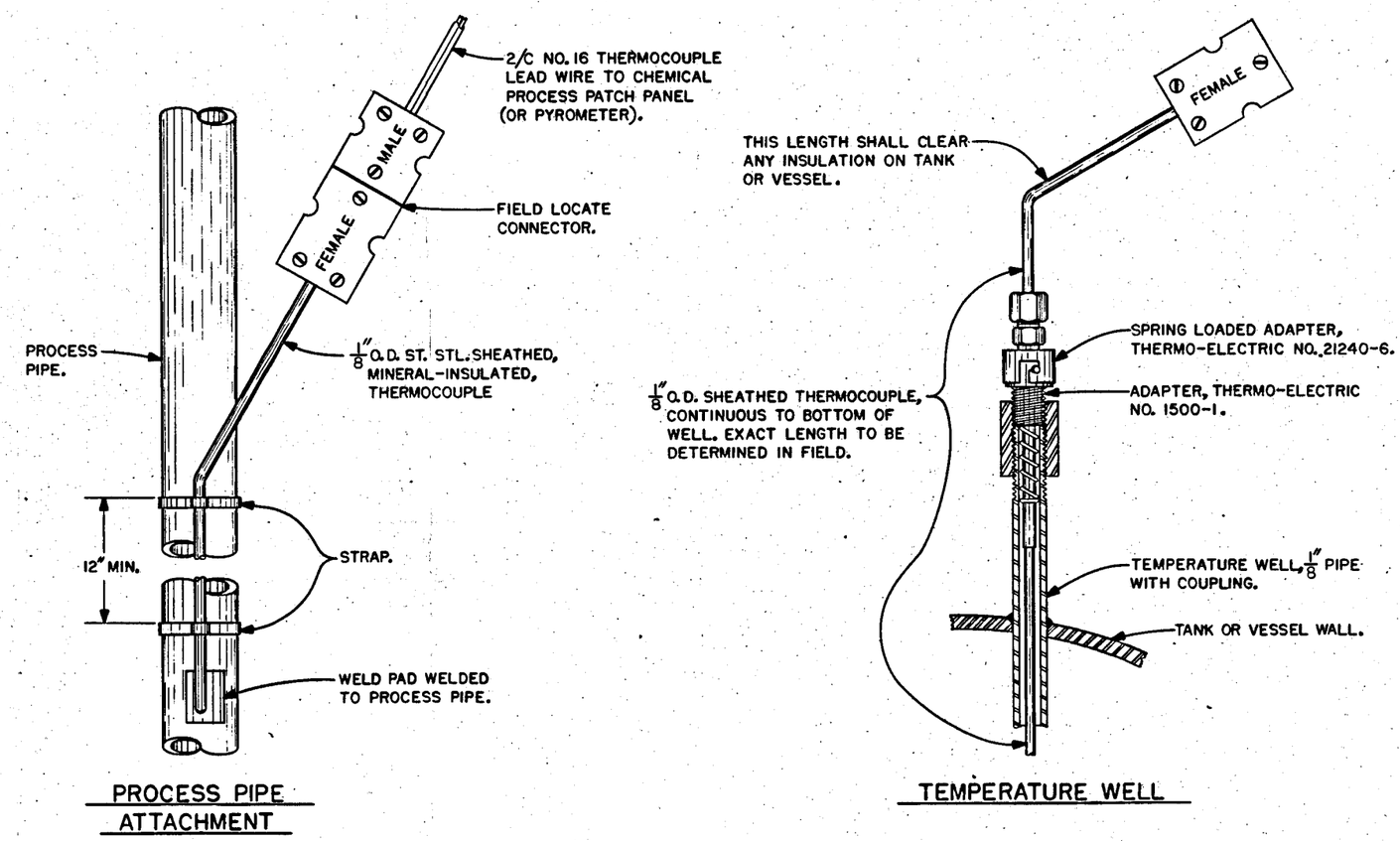


Fig. 3.13.8. Thermocouple installation methods.

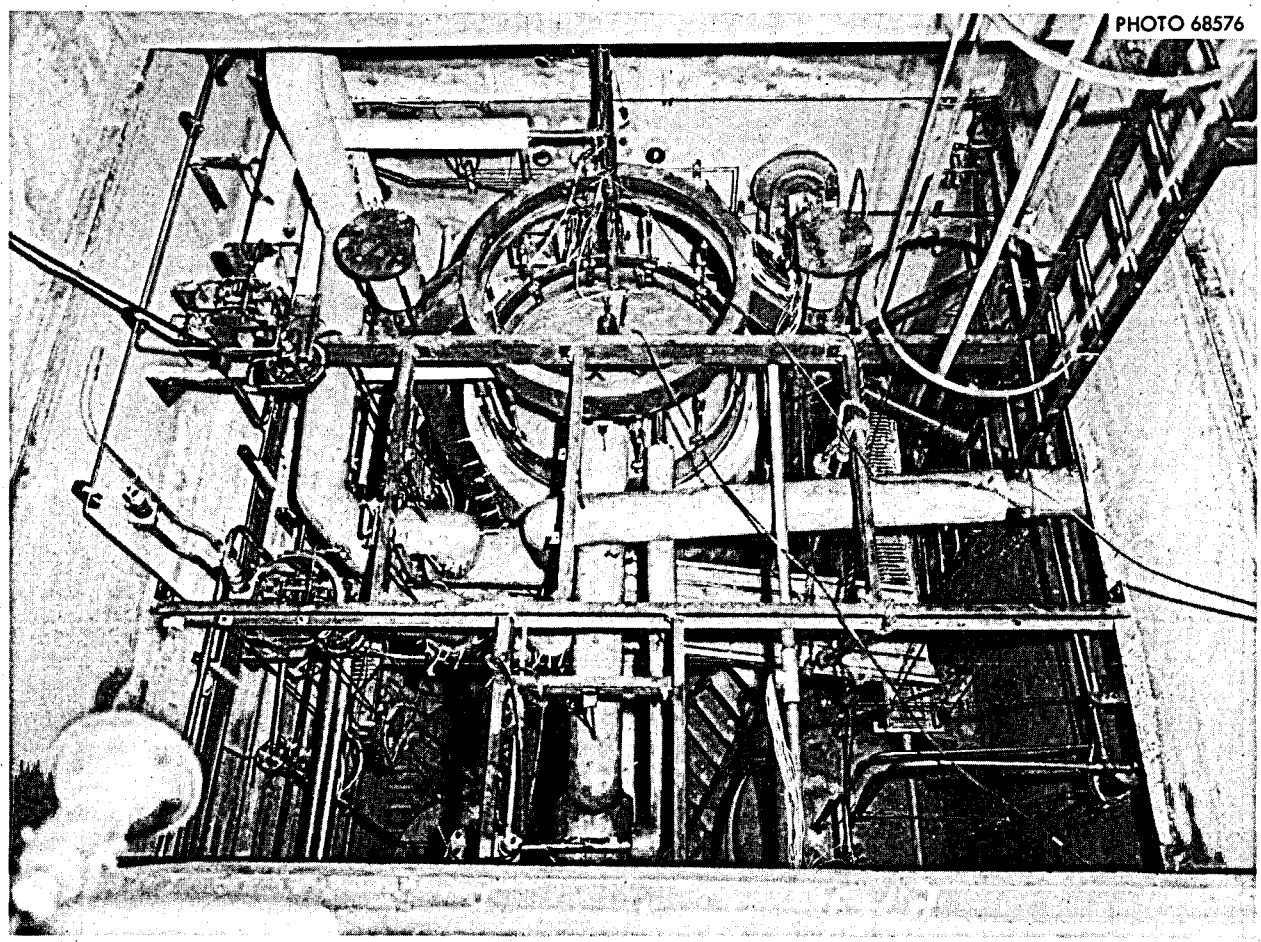


Fig. 3.13.9. MSRE fuel processing cell.

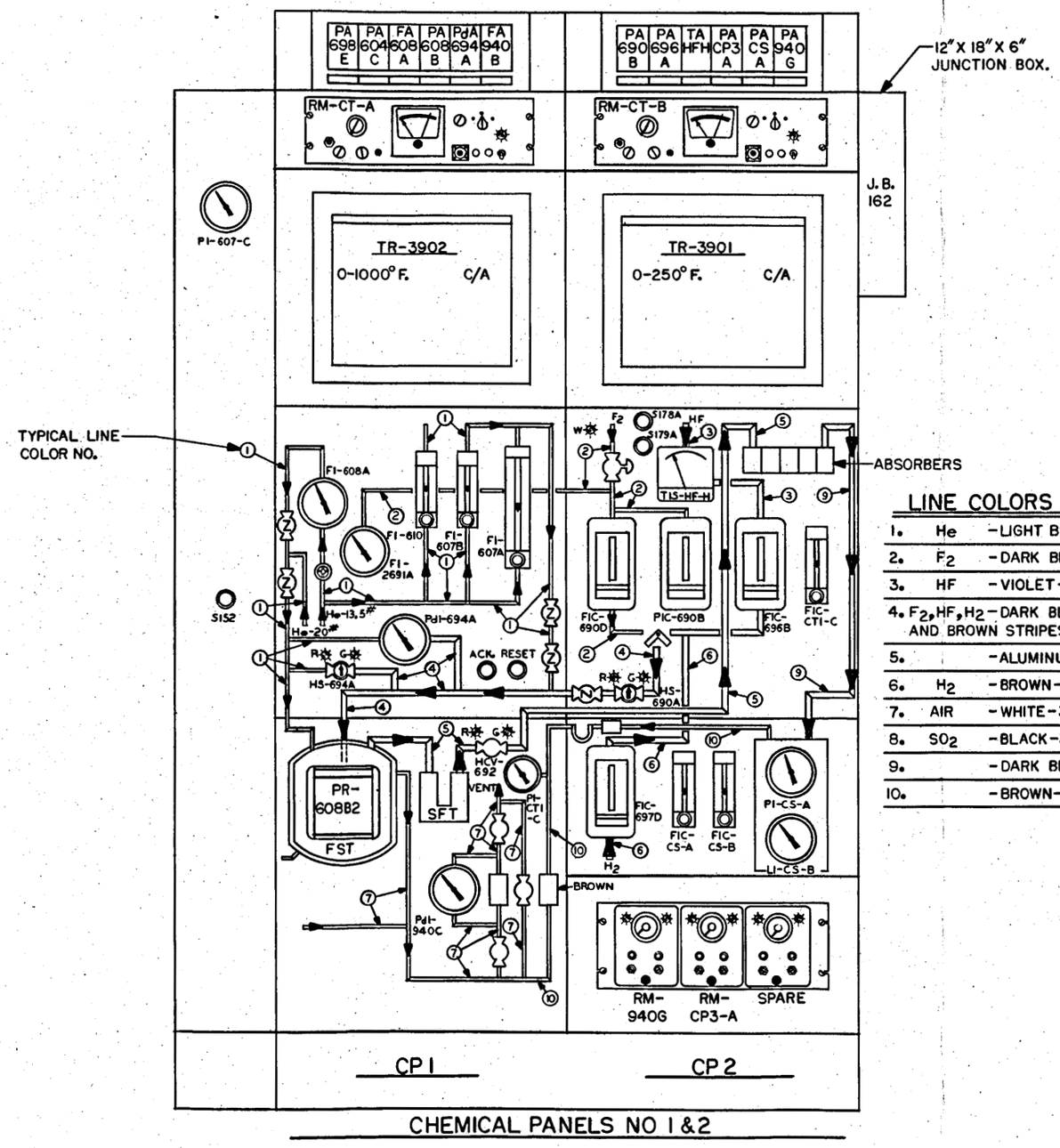


## LINE COLORS AND SIZES

| | | |
|---|---|---|
| 1. | He | -LIGHT BLUE-3/16" WIDE-BL-1 |
| 2. | $F_2$ | -DARK BLUE-3/16" WIDE-BL-5 |
| 3. | HF | -VIOLET-1/2" WIDE-V-1 |
| 4. | $F_2$, HF, $H_2$ | -DARK BLUE W/ALTERNATE VIOLET AND BROWN STRIPES-1/2" WIDE-BL-5, V-1, BN-1 |
| 5. | | -ALUMINUM-1/2" WIDE-AL-1 |
| 6. | $H_2$ | -BROWN-1/2" WIDE-BN-1 |
| 7. | AIR | -WHITE-3/16" WIDE-WH-1 |
| 8. | $SO_2$ | -BLACK-3/16" WIDE-BK-1 |
| 9. | | -DARK BLUE-1/2" WIDE-BL-5 |
| 10. | | -BROWN-3/16" WIDE-BN-1 |

Fig. 3.13.10. Fuel processing system, control panel layout.

ORNL DWG. 72-5163

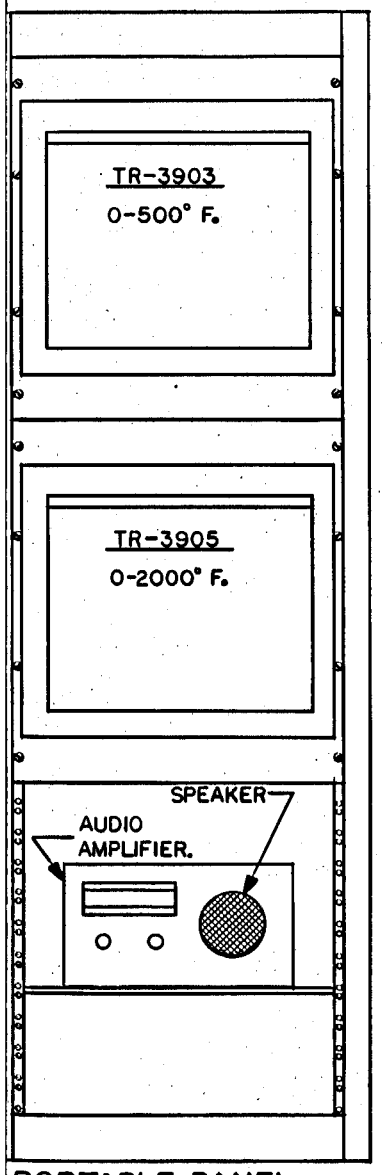


PORTABLE PANEL

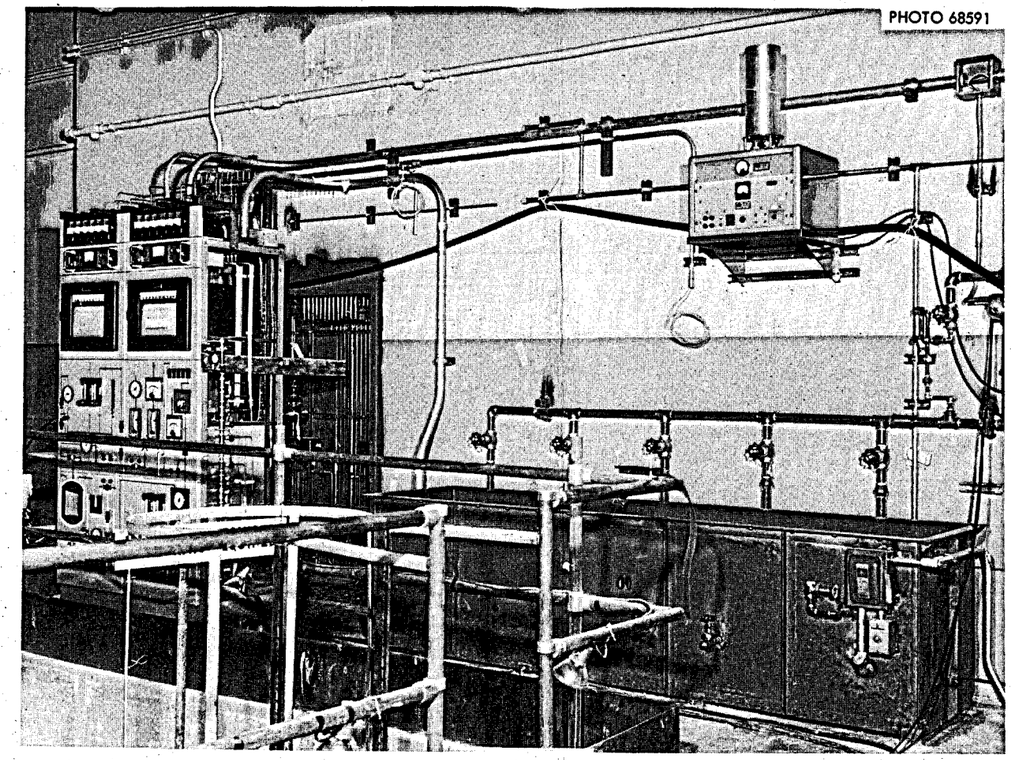


Fig. 3.13.11. Operating area for MSRE fuel processing system.

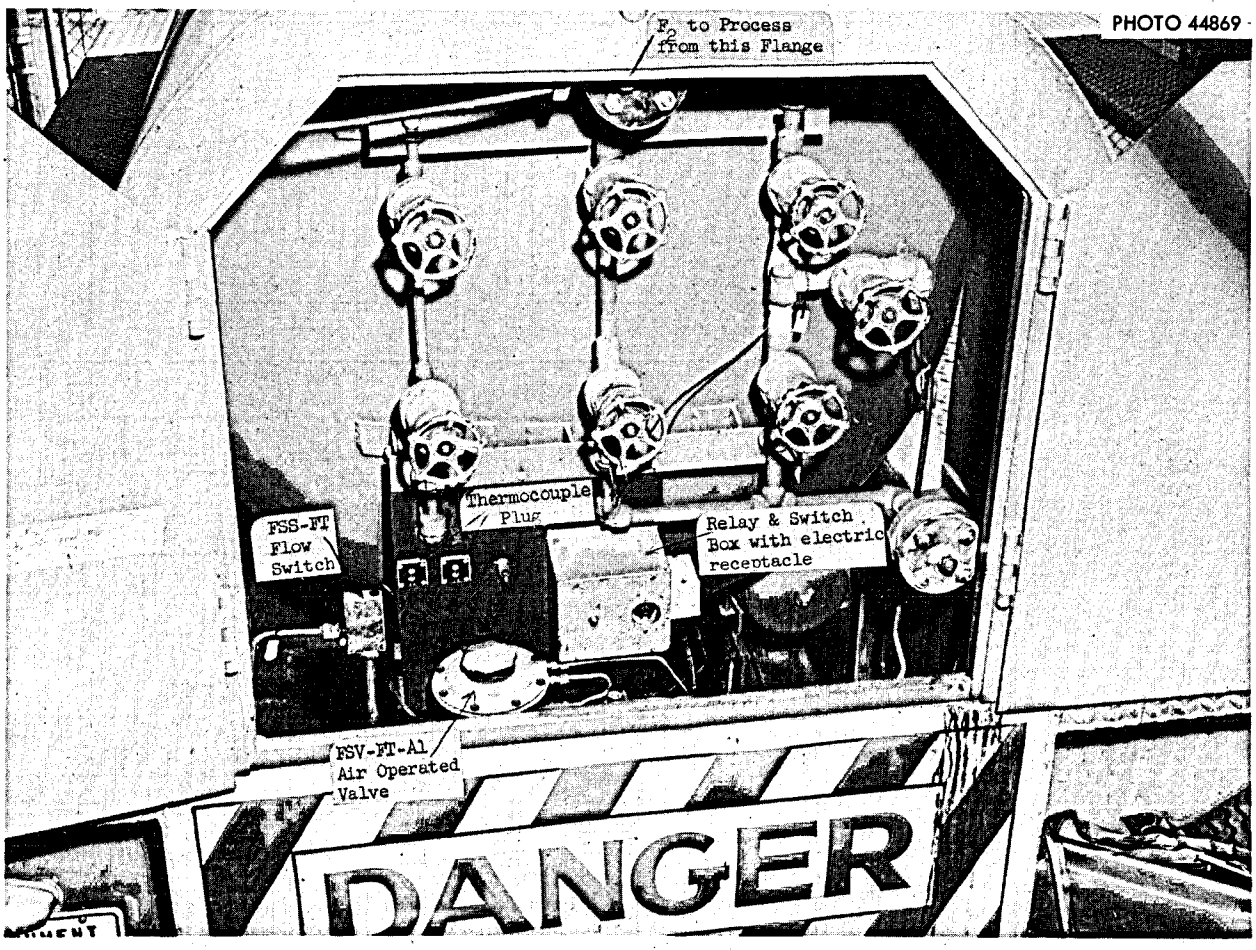


Fig. 3.13.12. Fluorine gas supply tank.

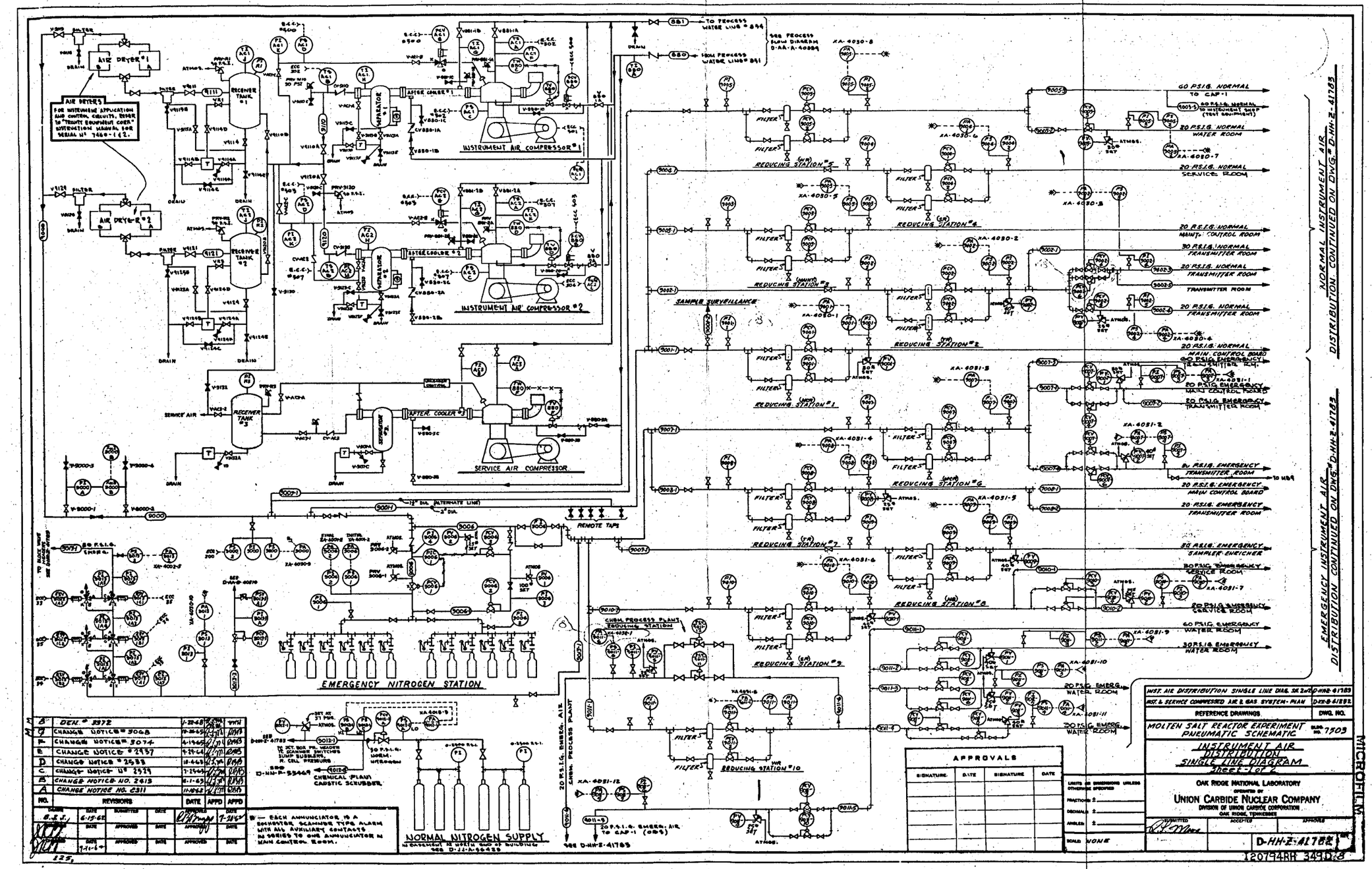


Fig. 3.14.1. Instrument air distribution, single-line diagram, sheet 1 of 2.

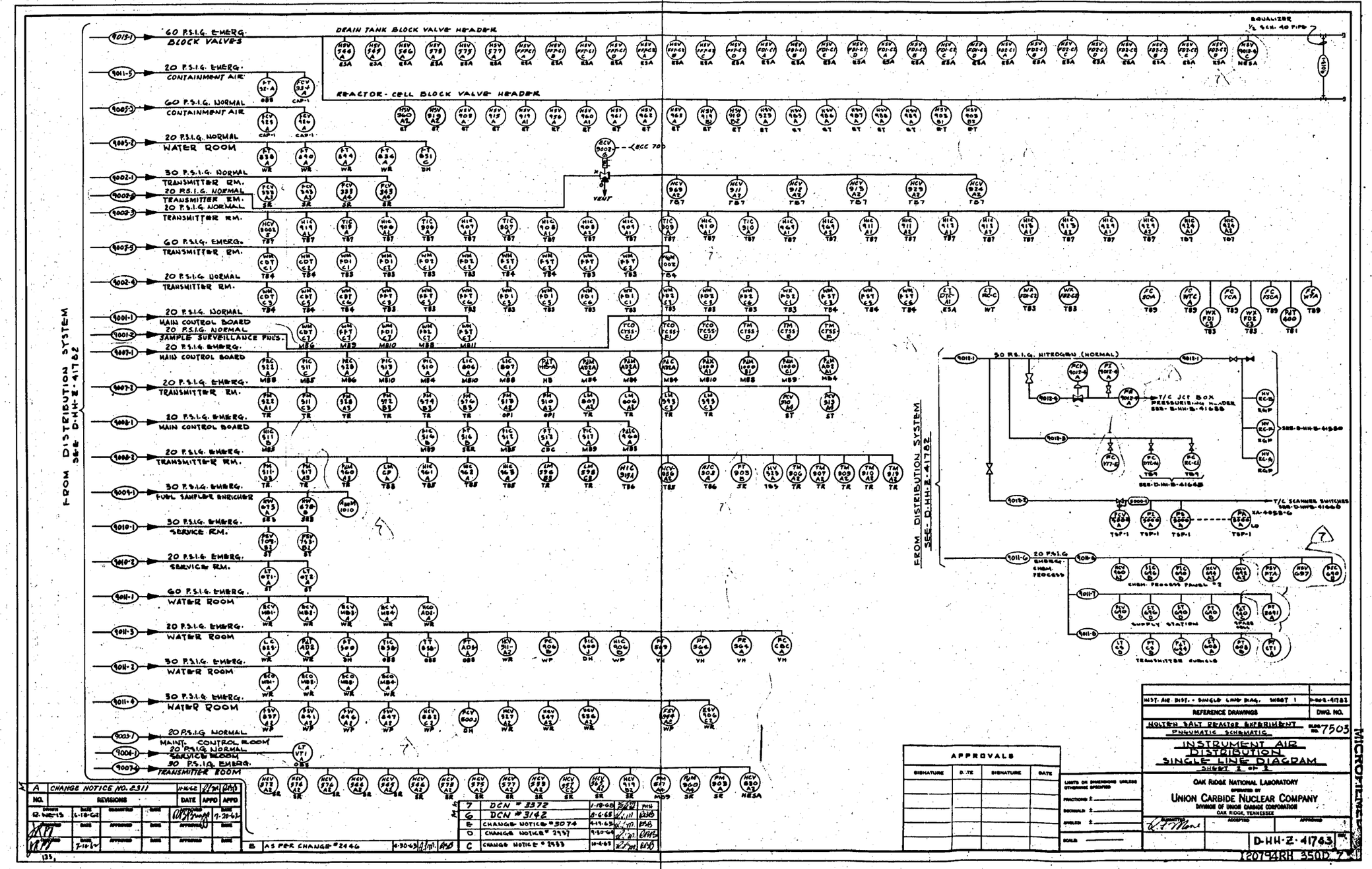


Fig. 3.14.2. Instrument air distribution, single-line diagram, sheet 2 of 2.

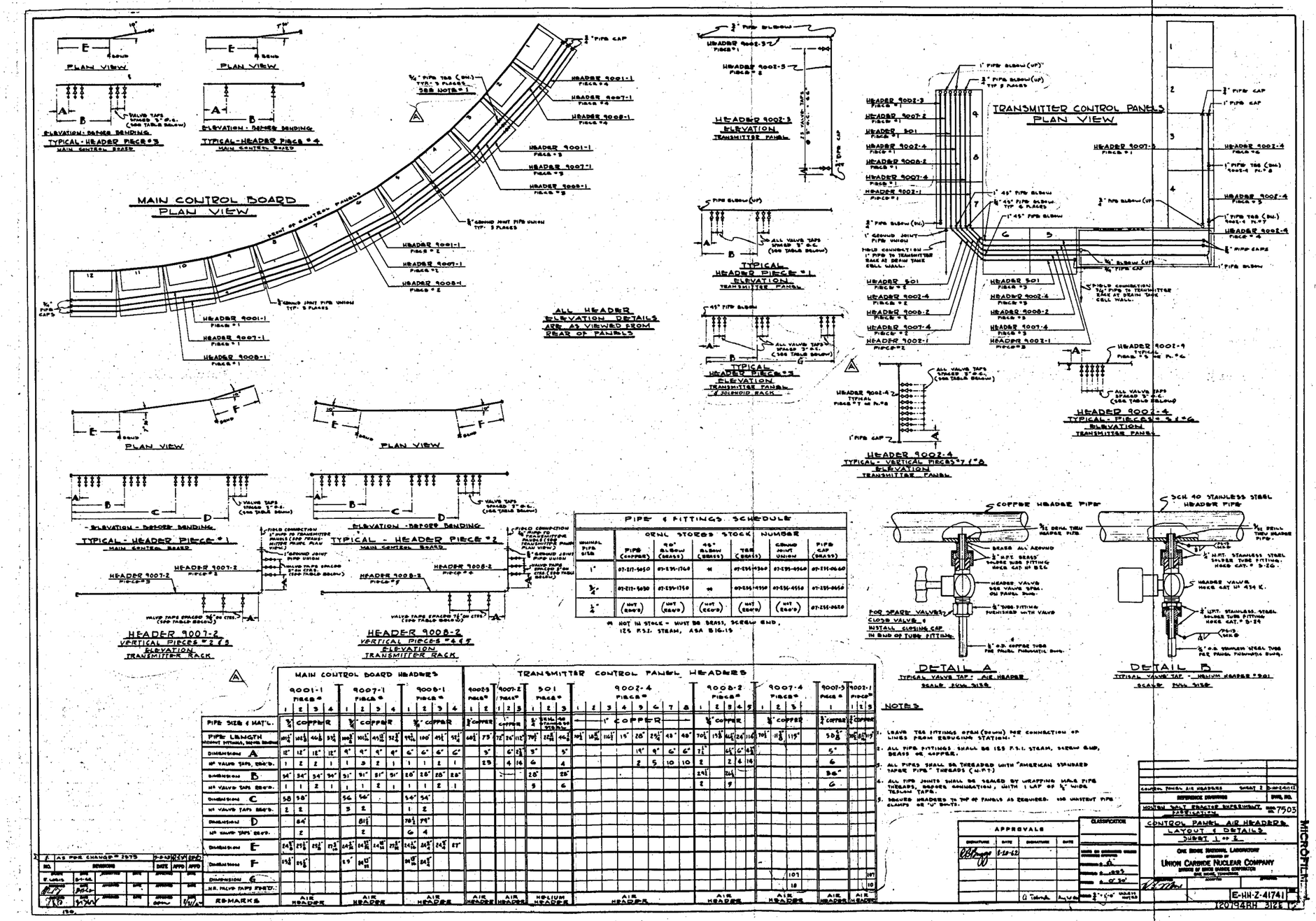


Fig. 3.14.3. Control panel air headers, layout and details, sheet 1 of 2.

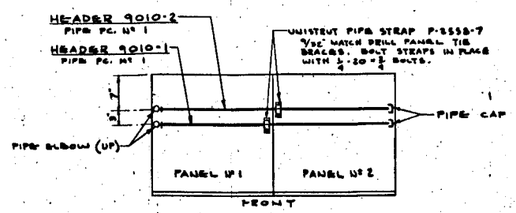


COOLING OIL CONTROL PANELS
PLAN VIEW

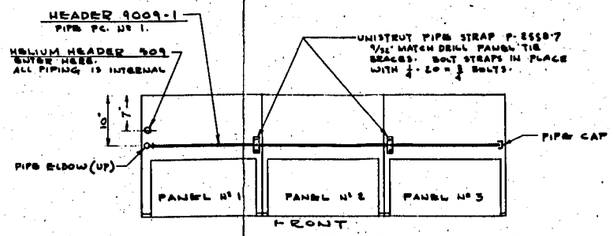


FUEL SAMPLER ENRICHER
CONTROL PANELS - PLAN VIEW

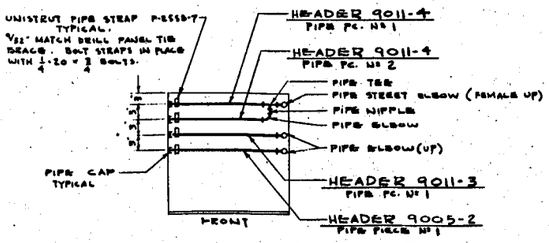


COOLING WATER CONTROL PANEL
PLAN VIEW

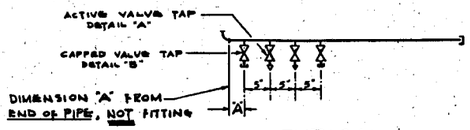


TYPICAL
COOLING OIL CONTROL PANEL HEADER
ELEVATION

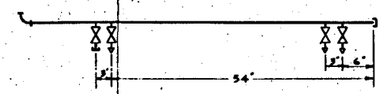


HEADER 9009-1
ELEVATION

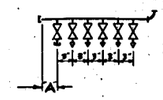


TYPICAL
COOLING WATER CONTROL PANEL HEADER
ELEVATION

| HEADER Nº | PIPE Pc. Nº | PIPE SIZE, MAT'L STORES STK. Nº | PIPE LENGTH END TO END WITHOUT FITTINGS | PIPE ELBOW SIZE, MAT'L STORES STK. Nº | PIPE CAP SIZE, MAT'L STORES STK. Nº | PIPE TEE SIZE, MAT'L STORES STK. Nº | PIPE NIPPLE SIZE, MAT'L STORES STK. Nº | VALVE TAPS ACTIVE DETAIL "A" | VALVE TAPS CAPPED DETAIL "B" | VALVE TAPS TOTAL REQ'D. | DIMENSION "A" |
|---|---|---|---|---|---|---|---|---|---|---|---|
| 9010-1 | 1 | 3/4" COPPER 07-217-5030 | 44 1/2" | 3/4" BRASS (90°) 07-235-1750 | 3/4" BRASS 07-235-0650 | | | 2 | 2 | 4 | 2 1/2" |
| 9010-2 | 1 | 3/4" COPPER 07-217-5030 | 44 1/2" | 3/4" BRASS (90°) 07-235-1750 | 3/4 BRASS 07-235-0650 | | | 2 | 2 | 4 | 6" |
| 9009-1 | 1 | 3/4" COPPER 07-217-5030 | 68 1/2" | 3/4" BRASS (90°) 07-235-1750 | 3/4" BRASS 07-235-0650 | | | 3 | 1 | 4 | |
| 9005-2 | 1 | 3/4" COPPER 07-217-5030 | 20 1/2" | 3/4" BRASS (90°) 07-235-1750 | 3/4" BRASS 07-235-0650 | | | 5 | 1 | 6 | 4" |
| 9011-3 | 1 | 3/4" COPPER 07-217-5030 | 20 1/2" | 3/4" BRASS (90°) 07-235-1750 | 3/4" BRASS 07-235-0650 | | | 6 | | 6 | 4" |
| 9011-4 | 1 | 3/4" COPPER 07-217-5030 | 17 1/2" | 3/4" BRASS 90° STREET 07-235-2050 | 3/4" BRASS 07-235-0650 | 3/4" BRASS 07-235-4510 | 3/4" BRASS 07-235-2005 | 5 | | 5 | 2 1/2" |
| | 2 | 3/4" COPPER 07-217-5030 | 17 1/2" | 3/4" BRASS (90°) 07-235-1750 | 3/4" BRASS 07-235-0650 | | | 5 | 1 | 6 | 2 1/2" |

1. ALL PIPE FITTINGS SHALL BE 125 P.S.I. SCREW END, BRASS OR COPPER.
2. ALL PIPES SHALL BE THREADED WITH AMERICAN STANDARD TAPER PIPE THREADS (N.P.T.)
3. ALL PIPE JOINTS SHALL BE SEALED BY WRAPPING MALE PIPE THREADS, BEFORE CONNECTION, WITH 1 LAP OF 1/2" WIDE TEFLON TAPE.

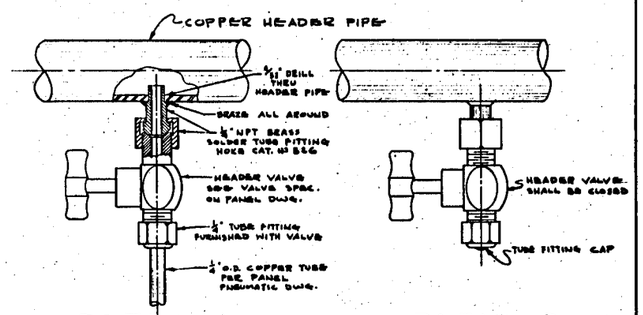


DETAIL A
ELEVATION SCALE FULL SIZE
TYPICAL - ACTIVE VALVE TAP

DETAIL B
ELEVATION SCALE FULL SIZE
TYPICAL - CAPPED VALVE TAP
SAME AS DETAIL "A", EXCEPT AS NOTED.

| NO. | REVISIONS | DATE | APPD | APPD |
|---|---|---|---|---|
| | DRAWN R Weiss DATE 7-30-62 SUBMITTED APPROVED DATE | APPROVED DATE | APPROVED DATE | |
| | DESIGNED DATE 7-15-67 APPROVED DATE | APPROVED DATE | APPROVED DATE | |
| | DESIGNED DATE 2-13-67 APPROVED DATE | APPROVED DATE | APPROVED DATE | |

| APPROVALS | | | |
|---|---|---|---|
| SIGNATURE | DATE | SIGNATURE | DATE |
| R.S. Briggs | 8-15-67 | | |

LIMITS OF DIMENSIONS UNLESS OTHERWISE SPECIFIED
FRACTIONS ± 1/32"
DECIMALS ± .005
ANGLES ± 0° 30'
SCALE 1" = 1'-0" UNLESS NOTED

CONTROL PANEL AIR HEADERS SHEET 1 D-HH-Z-41741
REFERENCE DRAWINGS DWG. NO.
MOLTEN SALT REACTOR EXPERIMENTS FABRICATION DWG. NO. 7503
CONTROL PANEL AIR HEADERS
LAYOUT & DETAILS
SHEET 2 OF 2

OAK RIDGE NATIONAL LABORATORY
OPERATED BY
UNION CARBIDE NUCLEAR COMPANY
DIVISION OF UNION CARBIDE CORPORATION
OAK RIDGE, TENNESSEE

SUBMITTED R.E. Moore ACCEPTED APPROVED

D-HH-Z-41742 REV

X20794RH 3130

MICROFILM

Fig. 3.14.4. Control panel air headers, layout and details, sheet 2 of 2.

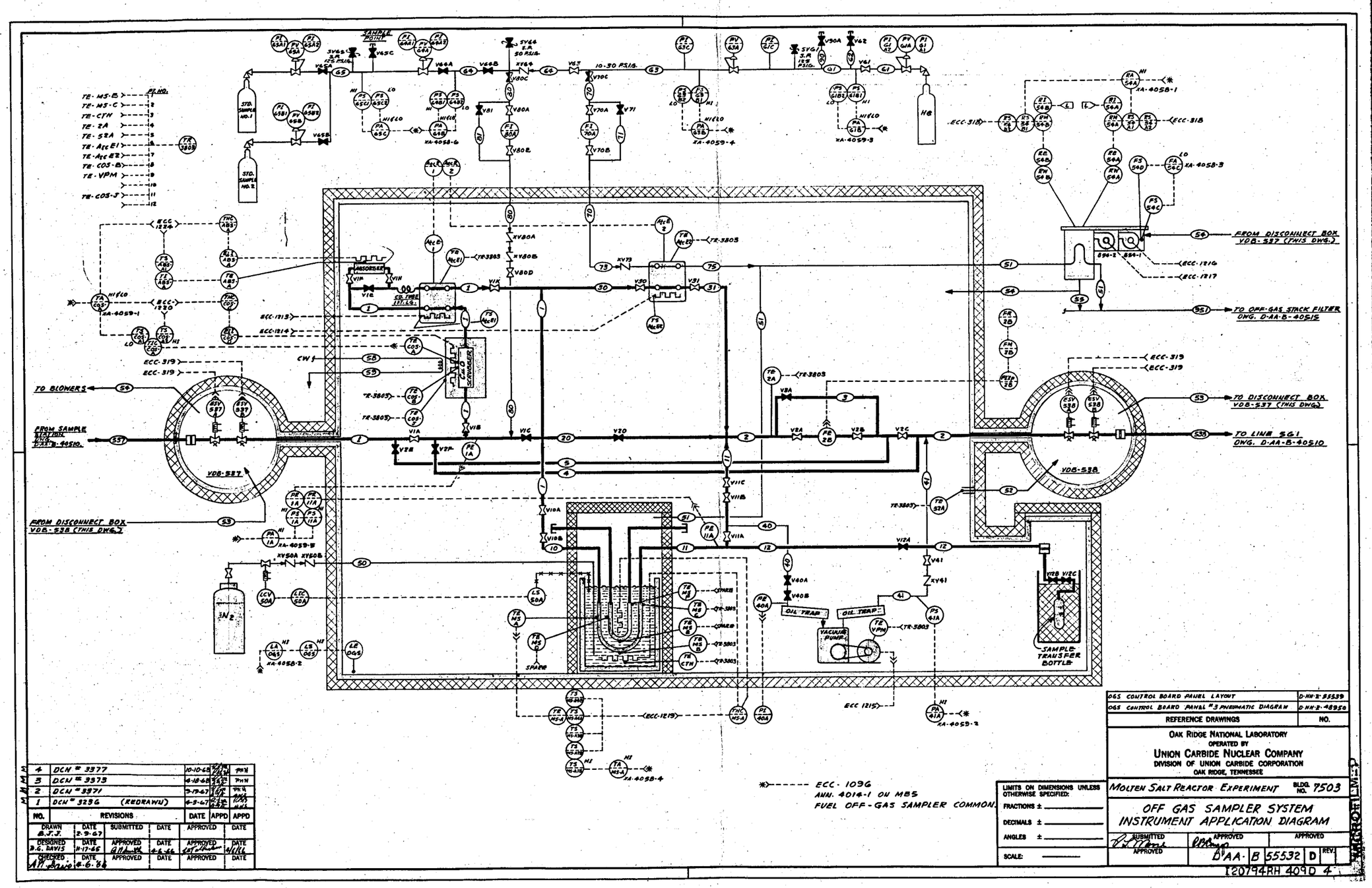


Fig. 3.15.0. Off-gas sampler system, instrument application diagram.

ORNL-DWG 67-4765

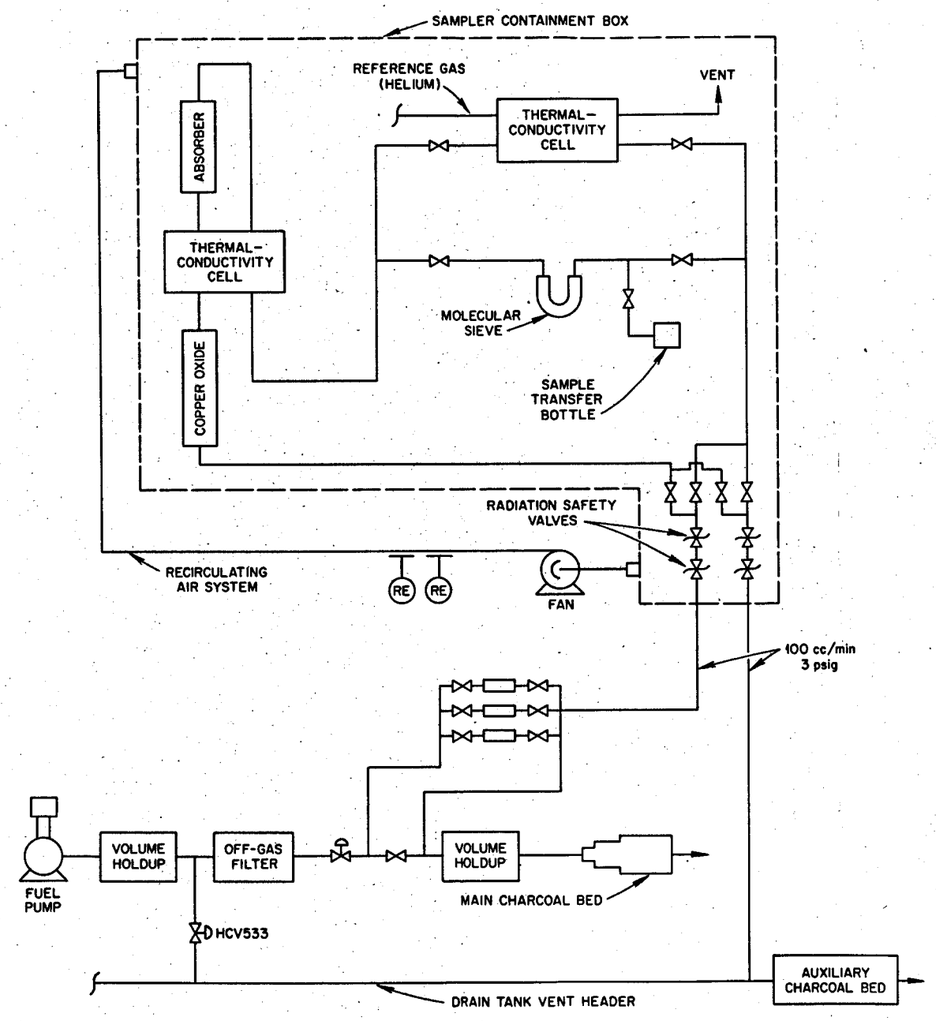


Fig. 3.15.1. Schematic diagram – MSRE off-gas sampler.

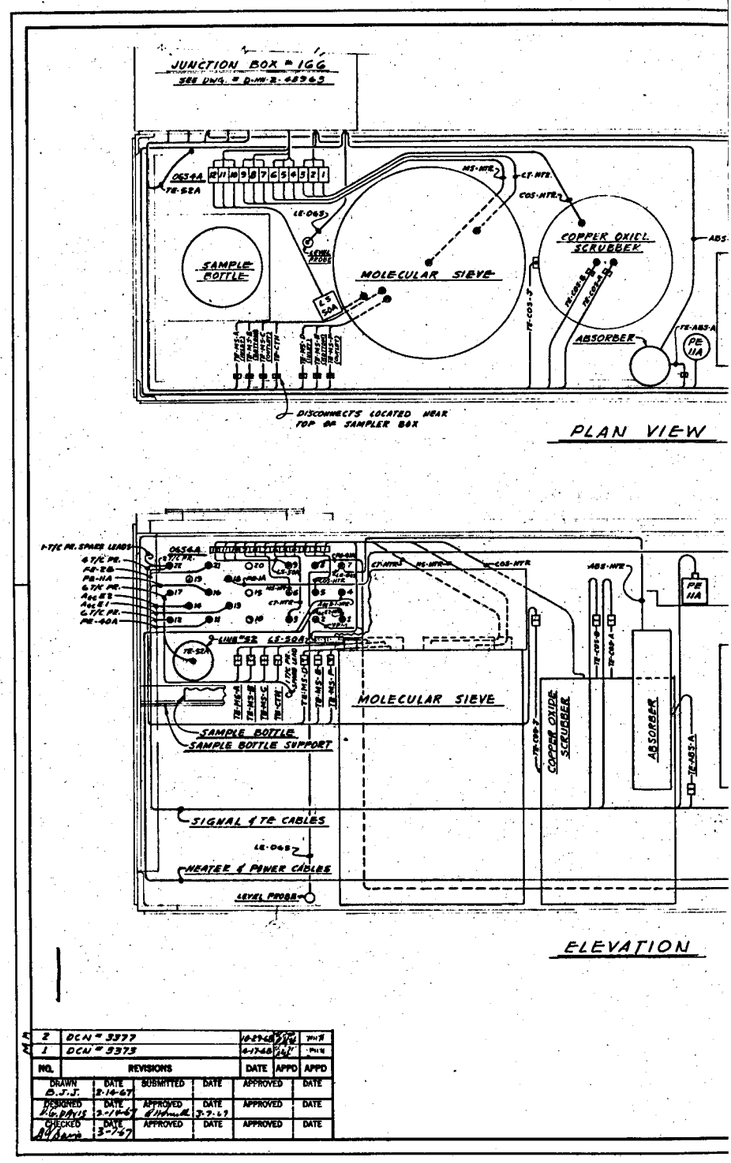


Fig. 3.15.2. Off

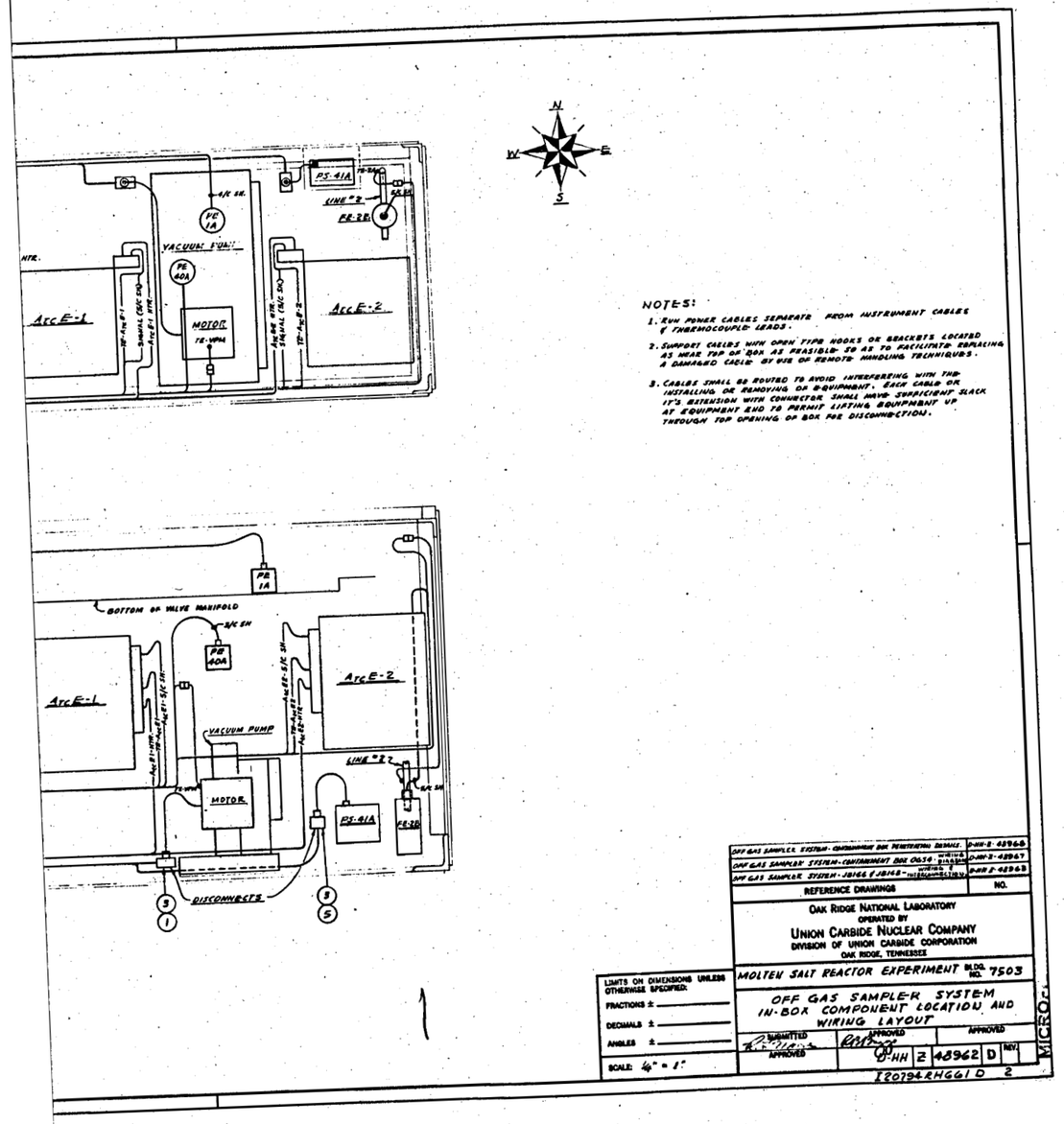


gas sampler system, in-box component location and wiring.

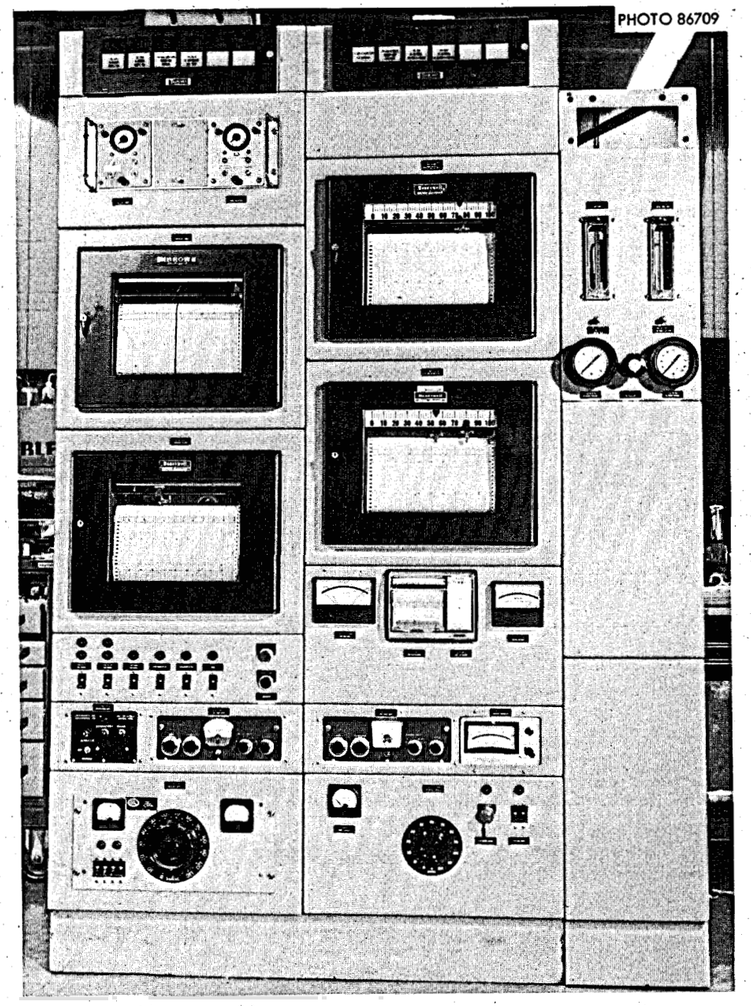


Fig. 3.15.3. Off-gas sampler panel.

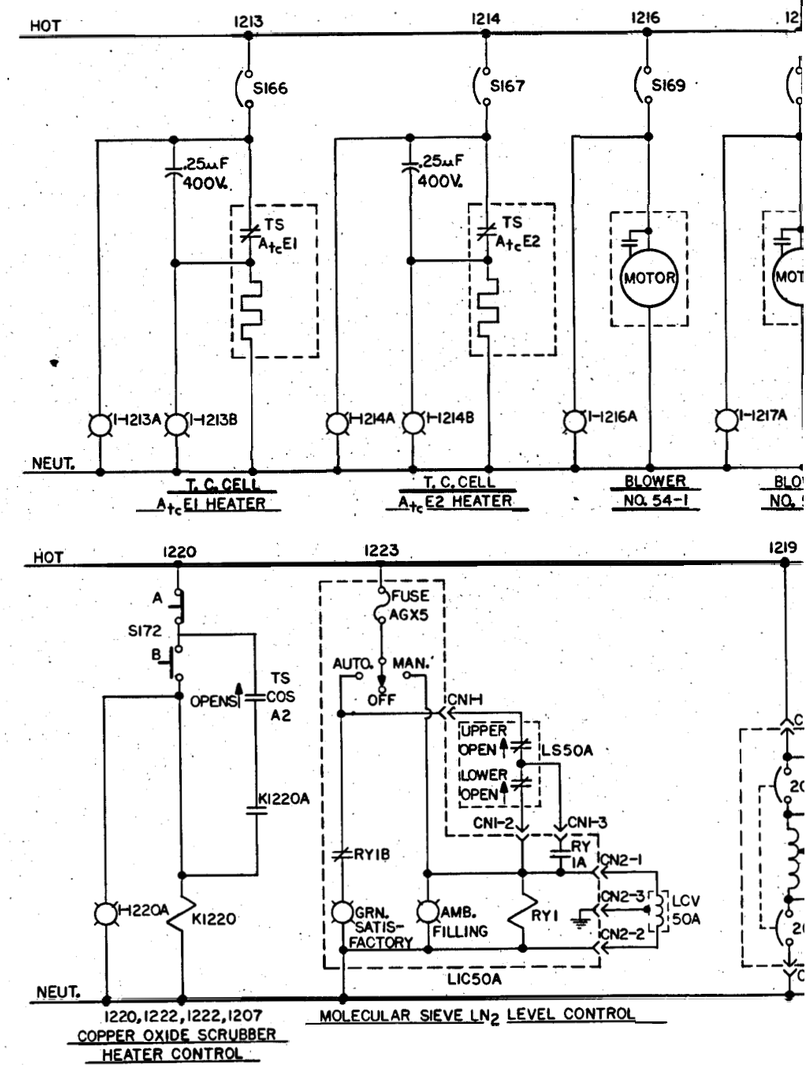


Fig. 3.15.4. Off-gas c

ORNL DWG. 72-5164

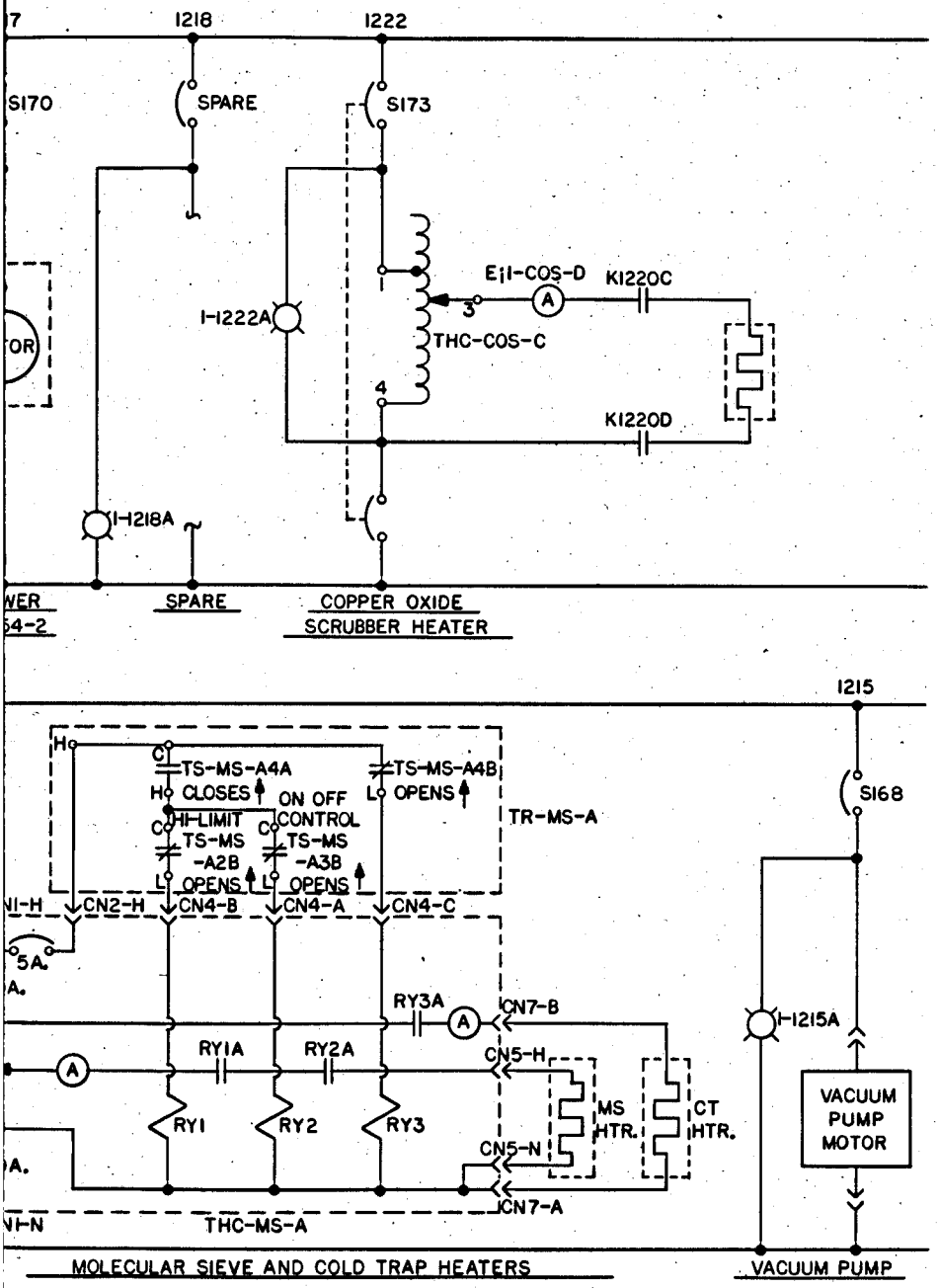


ntrol schematic.

# 4. ELECTRICAL CONTROL AND ALARM CIRCUITS

P. G. Herndon

T. M. Cate R. L. Moore

## 4.1 GENERAL DESCRIPTION

The MSRE electrical control and alarm circuits consist generally of a system of electrical contacts interconnected in various logic arrangements to initiate or inhibit control actions in the reactor systems and to alert the operator, by operating alarms or indicator lights, when abnormal conditions exist in the system. Control and/or alarm actions are initiated either automatically by instrument switches or manually by hand-operated switches. The electrical circuits are shown in Fig. 4.1.1 through 4.1.59, and the logic of the contact arrangements is described by the block diagrams in Fig. 4.1.60 through 4.1.77.

In many cases the instrument switches are actuated indirectly by the use of pressure switches connected to pneumatic transmission lines or from electronic switches connected to electric transmission lines. In other cases instrument switches are connected directly to the process and are actuated directly by the process (see Chap. 5). Two general types of manually (hand) actuated switches are found in the MSRE: rotary and push-button. Both types may have multiple contacts; however, the push-button switches are usually single-contact devices. Both types may have either maintained-contact or spring-return action. Maintained-contact switches remain in the selected position, while spring-return switches return to their initial position when released. Most rotary switches are multicontact, multiposition devices. This type of switch is used mainly where variations in the mode of system or equipment operation require changes in circuit logic.

Contacts on the instrument and manual switches are arranged in series, parallel, and series-parallel configurations (depending on the logic decision required). The resultant array is connected to devices such as relays, contactors, timers, solenoid valves, indicator lamps, and annunciators.

Relays are used to provide contact multiplication, reversal of control action, and/or circuit isolation. In many instances, one switch contact or circuit is required to initiate or inhibit an action in several separate circuits. In these instances the controlling contact or circuit operates a relay which supplies the contact actions required for operation of the slave circuits. In other instances, multiple-contact relays are used to provide the electrical isolation required to prevent "sneak" circuits or to separate redundant safety circuits. Reversal of contact action (normally open to normally closed or vice versa) is usually combined, in one relay, with the contact multiplication and/or isolation functions; however, in some cases, single- or multipoint-contact relays are used for this purpose alone.

Contactors are basically heavy-duty relays whose contacts have the capacity to carry large currents. They are used mainly for the control of heater and motor loads.

The solenoid valves used in the MSRE are magnetically actuated control valves with quick-opening (on-off) flow characteristics. The valves are operated by energizing or deenergizing a solenoid coil. Two general types of solenoid valves are used in the MSRE: two-way and three-way. The two-way valves are used to shut off flow in process or instrument lines. The primary use of this type of valve in the MSRE is to provide closure of containment penetrations if unsafe conditions occur; however, in some applications, such as found in the fuel sampler-enricher system, they are also used for control action. Three-way valves are used to switch the connection of an instrument or process line to one or the other of two similar lines. The primary use of this type of valve is for control of pneumatically actuated valves. In most of these applications the pneumatic valve actuator is connected to a common port on the solenoid valve, a second port is connected to an instrument air line, and

a third port is vented to atmosphere. When the solenoid is energized, pressure is either applied to or vented from the pneumatic valve actuator, causing the pneumatic valve to either open or close, depending on the form of the solenoid valve used. In some similar MSRE applications the third port is connected to another instrument air line operated at a different pressure. This type of connection is used where it is desired to switch the flow in a process line to one or the other of two predetermined values. The pneumatically actuated valves used in these applications have throttling-type flow characteristics, whereas those used for shutoff service have quick-opening (on-off) characteristics.

The annunciators used on the MSRE are modular relay-logic assemblies which produce audible and visual signals when actuated by opening or closing an external (field) contact. These devices are discussed in more detail in Sect. 4.12.

Two grades of circuits are found in the MSRE: "control grade" and "safety grade." Control-grade circuits are used where a failure of control or a loss of information or protective action (though undesirable) can be tolerated. Safety-grade circuits are used where such failures or losses cannot be accepted. The choice between the two systems is based on considerations of cost vs consequences. Safety systems involve the use of redundant reliable instruments and interconnections and tend to be more expensive than the control-grade systems; hence, safety systems are used only where necessary, and control-grade systems predominate. In the MSRE, safety-grade circuits are used to prevent the occurrence of conditions which could conceivably result in a nuclear excursion or which could result in the release of radioactive materials from the primary containment system. Control-grade circuits are used to provide routine control of the reactor system and auxiliaries and to provide equipment protection and visual and/or audible indications of abnormal or unsafe conditions. In some cases, control circuits are also used to forestall operation of safety-grade circuits by initiating automatic corrective actions such as control rod reversal or closure of valves supplying helium purge.

The wiring layout of the MSRE control circuit is arranged so that interconnections are centralized in the main control area. With a few exceptions, all control circuit wires are brought to terminal strips in the "safety" and "control" relay cabinets. Circuit interconnections are made within the cabinets. This arrangement expedites trouble-shooting during shakedown and operation and also expedites circuit revisions.

The layout of alarm circuit wiring is semicentralized; that is, most alarm circuit wiring is brought directly to annunciators in the main control area, but point-to-point interconnection of series switches and interconnection in field junction boxes is used extensively.

Control-grade and safety-grade wiring are kept separate throughout the MSRE system, and separate cabinets are used to house the control-grade and safety-grade relays. Redundant channels of safety-grade systems are also kept separate. This separation eliminates the possibility of loss of redundancy due to short circuits and aids in the identification of safety-grade circuits. The wiring practices and coding systems used in the MSRE are described in Sect. 7.2 of this report.

Except where large amounts of power are required for operation of motors or heaters, all MSRE control circuit voltages are either 48 V dc or 115 V ac, 60 Hz. As discussed in Sect. 4.13, reliable power for operation of the more important control circuits and instruments is obtained from either the 48-V dc system or from battery-powered static inverters. In some cases, redundant power sources are used to enhance the reliability of redundant safety circuits.

The remainder of this chapter discusses the operation of the MSRE control and alarm circuits. The intent of this discussion is to enable a person with a reasonable knowledge of instrumentation and control to understand the operation of the MSRE circuits. The criteria on which the control system is based are discussed in Part II-A of this report (Chaps. 1 and 2), and justification of the need for most reactor control and safety interlocks will not be presented in this discussion. However, the need for equipment protective interlocks and the operation of circuits will be explained where it is not obvious.

The control and alarm circuits associated with the sampling and enriching systems, the fuel processing system, and the fuel off-gas sampler are not discussed in this chapter. Since these are self-contained systems, the discussion of circuits for these systems is incorporated in the process instrumentation subsystems discussion of the sampling and enriching systems (Sect. 3.12), the fuel processing system (Sect. 3.14), and the fuel off-gas sampler (Sect. 3.15).

Table 4.1.1 cross-indexes the control circuit numbers with the numbers of the sections in this report where the circuits are described.

Table 4.1.1. Control circuit number index

| Circuit number | Circuit | Section number |
|---|---|---|
| 1–3 | Fuel drain demand | 4.7.2 |
| 4–16 | Load scram demand | 2.8.6, 4.7.1 |
| 17 | Spare number | |
| 18–27 | Fuel drain demand | 4.7.2 |
| 28–29 | Rod scram | 2.5.1, 4.7.3 |
| 30–32 | Cell penetration block demand | 4.8.3 |
| 33–35 | Instrument air line block demand | 4.8.3.1 |
| 36–39 | Liquid waste block valves | 4.8.3.2 |
| 40–48 | Helium supply block valves | 4.8.1 |
| 49 | Vapor condensing tank block valve | 4.8.3.3 |
| 50–58 | Cooling water block valves | 4.8.3.7 |
| 59 | Spare number | |
| 60–68 | Fuel pump bubbler level system helium purge block valves | 4.8.1, 4.9.8 |
| 69 | Fuel pump bubbler level element input signal selector | 4.9.8 |
| 70–74 | Off-gas block valves | 4.8.2 |
| 75–77 | Coolant pump bubbler level system helium purge block valves | 4.8.1, 4.9.8 |
| 78–79 | Coolant pump bubbler level element input signal selector | 4.9.8 |
| 80 | Cell evacuation valve | 4.8.3.4 |
| 81 | Steam dome condensate drain block valves | 4.8.3.5 |
| 82 | Control rod cooling air block valve | 4.8.3.4 |
| 83 | Reactor drain line purge block valve | 4.8.1 |
| 84–85 | Low reactor cell pressure | 4.8.3.4 |
| 86–114 | Control interlock relays | 4.10 |
| 115–116 | Drain tank helium supply valves | 4.2.4.1 |
| 117–121 | Drain tank vent valves | 4.2.4.2 |
| 122–123 | Pump bowl vent valves | 4.2.6 |
| 124–125 | Load scram demand | 2.8.6, 4.7.1 |
| 126–127 | Drain tank helium supply valves | 4.2.4.1 |
| 128–129 | Pump bowl helium purge valves | 4.2.5 |
| 130–133 | Drain tank bypass valves | 4.2.4.3 |
| 134–139 | Reactor operational mode selector circuits | 4.2.1 |
| 140–141 | Emergency coolant drain demand | 4.2.8 |
| 142 | Coolant salt pump | 4.2.3 |
| 143–145 | Afterheat removal valves | 4.2.9 |
| 146 | Component coolant pump $\Delta P$ | 4.9.4 |
| 147 | Fuel salt pump | 4.2.2 |
| 148 | Normal fuel drain | 4.2.7 |
| 149 | Operate mode permit | 4.2.1 |
| 150–169 | Radiator load control | 2.8, 4.4 |
| 170–188 | Rod control | 2.7 |
| 189–192 | Fission chamber drives | 4.6 |
| 193–195 | Count rate meter confidence | 2.7 |
| 196 | Control rod drop timer | 2.7 |
| 197 | Control rod cooling fans | 2.7 |
| 198–199 | Reactor outlet temperature demand | 2.6.3.2 |
| 200–254 | Control interlock relays | 4.10 |
| 255–256 | Radiator door travel limit switches | 2.8 |
| 257 | Spare number | |
| 258–259 | Afterheat removal valves | 4.2.9 |
| 260–274 | Safety interlock jumpers | 4.2.1 |
| 275–290 | Nuclear instruments | 2.0 |
| 291 | Health physics monitors | 2.9 |
| 292–295 | Reactor flux demand limiting | 2.5.1 |
| 296–297 | Pump power measurements | 3.1, 3.3 |
| 298 | Oxygen analyzer block valves | 4.8.3.6 |
| 300–310 | Instrument air compressors and lube oil pumps | 4.9.2, 4.9.3 |
| 311 | Spare number | |

Table 4.1.1. Continued

| Circuit number | Circuit | Section number |
|---|---|---|
| 312–315 | Component coolant pumps | 4.9.4 |
| 318–319 | Off-gas sampler block valves | 4.8.2 |
| 320–334 | Spare numbers | |
| 335–342 | Fuel processing system | 3.13.4 |
| 343–349 | Spare numbers | |
| 350–394 | Fuel sampler-enricher | 3.12 |
| 395–399 | Spare numbers | |
| 400–423 | Cover gas system | 4.9.6 |
| 424–425 | Spare numbers | |
| 426–429 | Indicator lamps | |
| 430–440 | Electronic Consotrol instruments | |
| 441–499 | Indicator lamps | |
| 500–505 | Instrument air compressors | 4.9.2 |
| 506–513 | Lube oil pumps | 4.9.3 |
| 514–521 | Radiator annulus blowers | 4.9.7 |
| 522–528 | Containment air fans | 4.8.4 |
| 529–534 | Treated water pumps | 4.9.7 |
| 535–540 | Cooling tower pumps | 4.9.7 |
| 541–546 | Cooling tower fans | 4.9.7 |
| 547–549 | Component cooling pump No. 3 | 4.9.7 |
| 550–555 | Reactor cell space cooler | 4.9.7 |
| 556–561 | Coolant cell space cooler | 4.9.7 |
| 562–564 | Drain tank cell space cooler | 4.9.7 |
| 565–566 | Reactor cell exhaust duct valves | 4.9.7 |
| 567 | High-bay exhaust damper | 4.9.7 |
| 568 | Radiator door drive motor | 2.8 (IIA) |
| 569 | Radiator door drive motor overcurrent protection | 2.8 (IIA) |
| 570 | Treated water pump No. 3 | 4.9.7 |
| 571–574 | Spare numbers | |
| 575–599 | Fuel processing sampler | 3.12 |
| 600–649 | Electronic Consotrol instruments | |
| 650–781 | Freeze valves | 4.3 |
| 782–799 | Spare numbers | |
| 800–1120 | Annunciators | 4.12 |
| 1121–1199 | Spare numbers | |
| 1200–1224 | Off-gas sampler | 3.15 |

## 4.2 MASTER CONTROL CIRCUITS

The master control circuits enable the operator in the main control room to manipulate those elements which exert a direct and immediate influence on the status of operating conditions in the reactor primary system. The major elements involved are the helium supply and vent valves, the transfer, fill, and drain freeze valves, the circulating pumps, the control rods, and the radiator components. The way these elements are used to control the reactor system is described in Sects. 1 and 3 and will not be discussed here unless further explanations are needed to clarify the operation of specific circuits. The control elements make up parts of several systems as shown in Figs. 1.4.3, 1.5.4, and 1.5.6. The remainder of this section is intended to show how the control circuits function to energize and deenergize these elements.

The design of the master circuits, shown in Fig. 4.9, 4.11, and 4.12, is based on the philosophy that, while necessary and desirable, administrative control alone is not adequate to ensure safe and orderly operations. The system is complex, with many valves and tanks, and the probability of mis-operation is very high; therefore, some restrictions, independent of operator judgment, are needed to prevent operations that would result in hazardous or undesirable conditions. Manual switches, conveniently located on the console, and graphic panels in the main control room give the operator command of each control element. These elements must be manipu-

lated according to established procedures, and automatic interlocks are combined with the manual switch contacts in each circuit to ensure that the procedure is followed. The restrictions imposed by the automatic interlocks are removed only when correct valve positions, flows, temperatures, and pressures are established in the system by the operator.

The system of logic around which the master control circuits are designed is shown on the block diagrams in Figs. 4.1.60 and 4.1.61. In general, the operator must follow a three-step procedure to operate the reactor system. First, he must commit the reactor to a particular type or mode of operation by energizing the operational mode selector circuits in the correct order. This permits him to use some circuits, places specific restrictions on the use of some, and prohibits the use of others altogether. The next step is to select, by manipulating manual switches, one of the several specific operations permitted by the established mode. Finally, another manual switch is used to actuate a particular control element.

It should be noted at this point that the circuits described above are used for normal operational purposes. Nearly all of the valves controlled by these circuits also serve as safety block valves, and their operation is further restricted by a separate set of relay and switch contacts. These are safety-grade interlocks actuated by safety-system instruments and located on the end of the circuit nearest the final control element. Safety-grade interlocks are represented by the shaded blocks in the block diagrams. The elements deenergize and return to the safe position if any of the contacts open. They override all other contacts, and the valves cannot be energized again under any circumstances until all safety contacts are closed. The safety system is discussed in Sects. 1.5 and 4.7.

All of the valves and relays which make up the master control circuits are supplied from the 48-V dc battery-powered bus. This prevents unnecessary shutdowns caused by momentary interruptions of TVA-supplied electrical power and assures the continued operation of those instruments and control elements needed to conduct an orderly shutdown during sustained outages and other abnormal situations. The master control elements act toward shutdown when deenergized; that is, they assume positions which permit a reactor drain.

The solenoid valve operating coils are almost pure inductive loads which generate high transient voltages when the circuit is broken. These are often high enough to sustain damaging arcs across the interlock contacts. The silicon-diode–resistor combinations connected across each coil, as shown in Fig. 4.2.4.1C, eliminate the voltage peaks by effectively shorting out the current induced in the coil when the circuit is opened. No appreciable current flows through the diode when the circuit is closed. The value of the resistor $R$ is equal to the resistance of the coil and prevents a damaging short circuit in the event a diode fails.

### 4.2.1 Reactor Operational Mode Selector Circuits

The reactor is subject to several types or modes of operation, each having different requirements. Since each control element, such as valves and motors, must be used for all modes of operation, it is necessary to change the contact arrangements in the individual circuits when changing from one mode of operation to another. This is accomplished by using the operational mode selector circuits.

The operating modes are manually selected and are designated "off," "prefill," "operate," "operate-start," and "operate-run." A mode is established when the relays in circuits 134 through 139 are energized (see Fig. 4.1.11). The relays are energized when the operator presses push buttons S8, S9, S10, S11, and S12, assuming that all conditions imposed by the automatic interlocks have been satisfied. These switches, with integral indicator lamps, are located on the left side of the operator's console (see Fig. 4.2.1.1). Contacts on the relays open and close the lamp circuits (see Fig. 4.1.39, circuits 486, 487, and 488) to indicate which mode is in effect. A discussion of each mode circuit follows:

1. *Off.* This mode is not established by energizing a relay but exists whenever relays K134 ("prefill" mode) and K136 ("operate" mode) are deenergized. The operator can always return to the "off" mode by opening switch S8. In the "off" mode, restrictions are imposed on the following circuits:

1. Circuits 115 and 116 are open – prohibits opening fuel system helium supply valves.
2. Circuit 139 is open – prevents entering "run" operational mode. This activates control rod reverse circuit 186 and restricts manual operation of the radiator doors under certain conditions (see Table 4.2.1.2).
3. Circuit 147 is open – prevents starting the fuel salt pump.
4. Circuit 150 is open – prohibits automatic load control.
5. Circuit 170 is open – rod control servo is off.

6. Circuits 174, 175, and 176 are open – prohibits control rod withdrawal.
7. "Permissive to thaw" circuits for transfer line freeze valves (circuit A698 in Fig. 4.1.48 is typical) are open. Valves cannot be opened.
8. "Permissive to thaw" circuits for fill and drain line freeze valves (circuit A676, Fig. 4.1.47, is typical) are open. Valves cannot be opened by normal control functions but will open if emergency fuel drain safety circuits call for a reactor drain.

2. *Prefill.* Relays K134 and K135 must be energized to lift certain restrictions on the operation of the transfer freeze valves, the helium supply valves, the fuel and coolant salt pumps, and the reactor control rods. In circuit 134 the first four series-connected contacts close to indicate that all of the fuel salt is in the drain tanks and that freeze valves FV-104, FV-105, and VF-106 in the lines connecting the drain tanks to the reactor are closed. When these four contacts close, relay K-135 energizes to close permissive interlocks in the transfer freeze valve circuits (see Figs. 4.1.46 and 4.1.47), permitting them to be opened upon request by the operator. Relay K-134 can also be energized to establish the "prefill" mode by closing push-button switch S9. When relay K134 energizes, "prefill" mode is established, and the master control circuits are altered as follows:

1. Contact K134C closes to connect circuit 115 to the supply bus. The helium supply valves are now available for transfer operations.
2. Contacts K134H and K134D close in circuits 142 and 147 to bypass permissive interlocks which have no significance unless the pumps are full of salt. This permits the operation of both the coolant- and fuel-salt pumps to circulate helium through the loops.
3. Contact K134G closes in circuit 176 to remove restrictions imposed on the control rod withdrawal circuits.

3. *Operate.* Relays K136 and K137 must be energized to establish the "operate" mode before the fill and drain valves can be manipulated to fill the reactor loop with fuel or flush salt. Neither relay will energize until all of the transfer valves are closed. In circuit 136 the four series-connected contacts at the top end close to signify that freeze valves FV107, FV108, and FV109 in the transfer lines are closed. When this occurs, relay K137 energizes immediately and closes the "permissive to open" interlocks in the fill and drain freeze valve circuits (see Figs. 4.1.46 and 4.1.47). These valves now open and close as requested by the operator, and one of them must be opened before relay K136 will energize. The three parallel-connected contacts K671B, KA682B, and K693B are closed when these valves are open. After all safety-circuit jumpers have been removed from the jumper board, contact K149A closes, and the operate mode is then established when the operator closes push-button switch S10. Contact K149A closes when circuit 149 is energized. For each safety jumper plug inserted in the jumper board, one of the safety relays in Fig. 4.1.21 is energized. One contact on each relay closes to bypass a safety circuit interlock, and another opens to deenergize the "operate" mode permissive interlock circuit 149. Each jumper relay in Fig. 4.1.21 is energized by the same control power bus or the circuit in which safety interlocks are bypassed. Obviously, contact K149A in circuit 136 cannot be closed until all safety-circuit jumper plugs are removed.

The conditions imposed on other master control circuits by energizing the "operate" mode relay K136 are described in Table 4.2.1.1. Also note that the "prefill" mode relay K134 and the transfer valve permissive relay K136 deenergize as soon as any one of the three fill and drain freeze valves is opened. Thus, transfers between drain tanks are prevented because freeze valves FV107, FV108, and FV109 cannot be opened and the drain tank helium supply valves cannot be energized through transfer circuit 115.

4. *Operate-start.* The "operate" mode automatically becomes "operate-start" (K138 energized) when the reactor loop is filled to the correct level and the reactor drain valve (FV103) is frozen (relay contacts K97A and K695B in circuit 138 are closed). When relay K138 is energized, one restriction preventing control rod withdrawal is removed from circuit 174 (K138A closed).

**Table 4.2.1.1. Conditions imposed on master control circuits by energizing relay K136**

| Circuit | Relay contact | Function |
|---|---|---|
| 136 | KA136-A – close | S10 seal-in |
| 116 | KA136-C – close | Permit to energize helium supply valves through fill and drain matrix |
| 138 | KA136-D – close | "Start" mode permit |
| 139 | KA136-E – close | "Run" mode permit |
| 150 | KA136-F – close | Auto load control permit |
| 175 | KA136-G – close | Rod withdraw permit |
| 147 | KA136-H – close | Fuel pump start permit |
| 486 | KB136-A – close | "Operate" mode lamp on |
| 486 | KB136-C – open | "Off" mode lamp off |
| 170 | KB136-D – close | Establish flux operating mode for rod controller |

This permits the reactor to start with power generation exceeding 1.5 MW provided all other conditions required for control rod withdrawal have been established (see Sect. 2.6). The power generation is limited by means of circuit interlocks in the radiator door control circuitry which require that the reactor control system be in the "operate-run" mode in order to raise the doors and this demand power levels above 1.5 MW (contacts KA139G and KB139D in circuits 162 and 164 must be closed – see Figs. 2.8.9 and 2.8.11).

5. *Operate-run.* Relay K139 must be energized to establish the "operate-run" mode of operations. This relay will energize if the "operate" mode relay contact K136A is closed, if all of the conditions required for high-power operation have been satisfied, and if push-button switch S11 in circuit 139 is closed. The conditions required for high-power operation may be established through several different paths in circuit 139, depending on whether or not the operator chooses to control the reactor automatically or manually. A detailed explanation of the conditions required to close each contact in this circuit is given in Sect. 1.4. Briefly, circuit 139, shown in the simplified diagram of Fig. 4.2.1.2, operates as follows: One of the parallel paths above switch S11 will be closed if one complete set of nuclear instruments is functioning properly, and one of the parallel paths between switch S11 and contact K193D will also be closed if the operator has made the correct selections for manual or for automatic control of the rod drives and the load control elements. At this point, it should be noted that all of the above contacts are permissive interlocks which have no effect on the circuit after relay K139 becomes energized and closes seal-in contact K139A. Continuing down through the circuit, one of the parallel paths between contacts K223D and K166B will be closed if one of the wide-range nuclear instrument systems is functioning properly and indicating that reactor power is at a level greater than 0.2 MW. When the reactor power increases to a value greater than 1 MW, the above contacts are shunted by the "nuclear sag bypass" contacts on relays K208, K209, and K210. These are arranged in a two of three matrix to prevent the reactor from dropping out of the "run" control mode when a single nuclear safety channel is deenergized. The last contacts in the lower end of the circuit will be closed if one radiator blower is running and the fuel pump speed is above 1100 rpm. Once energized, K139 will remain energized as long as one radiator blower is running, the fuel pump speed is above 1100 rpm, and the "operate" mode relay K136 is energized. Table 4.2.1.2 describes the conditions imposed on other control circuits when the "run" mode is established.

**Table 4.2.1.2. Conditions imposed on control circuits when "run" mode is established**

| Circuit | Relay contact | Function |
|---|---|---|
| 139 | KA139A – close | Permissive interlock bypass seal |
| 150 | KA139C – open | Permissive interlock–load control mode |
| 151 | KA139D – close | Permits radiator ΔP setpoint control to operate in the automatic mode |
| 153 | KA139E – close | Permits radiator ΔP setpoint control to operate in the automatic mode |
| 162 | KA139G – close | Permits automatic operation of radiator inlet door drive |
| 138 | KA139H – open | Deenergizes start-mode relay K138 |
| 284 | KB139A – close | Establishes 15-Mw range in automatic rod controller |
| 186 | KB139C – open | Changes conditions required to produce control rod reverse |
| 164 | DB139D – close | Permits automatic operation of radiator outlet door drive |
| 488 | KB139E – close | "Run" mode "on" lamp energized |
| 488 | KB139F – open | "Run" mode "off" lamp deenergized |
| 174 | KB139G – close | Permissive interlock in rod withdrawal control circuits |
| 1078 | KB139H – close | Bypasses $\phi > 1.5$ Mw annunciator |

### 4.2.2 Fuel-Salt Pump

The fuel-salt pump runs when the 500-A power system circuit breaker D is closed, connecting the pump's 75-hp three-phase electrical motor to a TVA bus.[1] The operation of the breaker is controlled by the interlocks and relays in circuit 147, which is shown in Figure 4.1.12. The operation of the circuit breaker will be described first, since not only the fuel pump but also the coolant-salt pump, the two component coolant pumps, and the two main radiator blowers are supplied through identical circuit breakers. Except for the different logic arrangements of the control interlocks, the relay circuits controlling all of these breakers are basically alike and operate in the same way as those in circuit 147.

A typical breaker control relay circuit is shown in Fig. 4.2.2.1*a*. The breaker closes when relay KA147 is energized momentarily and opens when relays KB147 and KC147 are deenergized. As long as relays KB147 and KC147 are deenergized, the circuit breaker remains open, and a cross interlock prevents relay KA147 from being energized to close the breaker. To energize relay KA147, both the group I and group II contacts as well

as push-button switch S33 must be closed. Once the breaker closes, it is mechanically latched in this position. The group II interlocks and relay KA147 have no further control as long as the breaker remains closed. The breaker will remain closed unless the group I interlocks open or the "stop" push button S32 is opened to deenergize relays KB147 and KC147. The breaker may also be opened by a mechanical trip lever on the front of the enclosure or by the overload and undervoltage trip coils which are integral parts of the breaker latching mechanism.

The action of the circuit breaker is such that when relay KA147 energizes closing contact KA147A, even momentarily, the closing coil circuit (circuits shown in Fig. 4.2.2.1*b*, which are associated with the operating mechanism) is energized and seals itself in the energized mode (relay KA147 no longer has control). The breaker closes and is held in this position by a spring-actuated mechanical latch. As the breaker mechanism moves to the "closed" position, the X contacts are opened by mechanical action to deenergize the closing coil. The closing action also closes an auxiliary contact *a*, permitting the trip coil circuit to be energized upon request. As soon as this contact closes, a small current will flow through the trip coil and the sensitive high-resistance relay DA. Relay DA will energize and close the contact DA in the red indicator lamp (pump running) circuit shown in Fig. 4.2.2.1*c*. If the red lamp goes out while the breaker is closed, it is an indication that the trip coil circuit is open and cannot be used to open the breaker and stop the pump. If this occurs, the mechanical trip lever must be operated to stop the pumps. A second auxiliary contact *b* opens the green (pump stopped) indicator lamp circuit.

The circuit breaker is opened by spring action when the trip coil releases the mechanical latch. The spring was compressed when the breaker moved to the "closed" position. The trip coil is energized when relay KC147 is deenergized. This relay deenergizes when any of the group I interlocks open or the "stop" push-button switch S32 is opened. The breaker will not close until relays KB147 and KC147 are energized and the "start" push-button switch is closed to energize relay KA147. It should be noted that when KC147 is energized there is a short time delay before contact KC147A opens the trip coil circuit. This prevents the circuit breaker from pumping (opening and closing several times in rapid succession) in abnormal situations such as simultaneous operation of the "start" and "stop" push buttons or holding the "start" push button closed when the overload trip is energized.

The arrangement of the group I and group II interlocks in the fuel-salt pump control circuit 147 is shown in Fig. 4.2.2.2. To start the pump, a path of electrical continuity must be established through both groups by contact closures. When the group I contacts are closed, the breaker trip relays KB147 and KC147 are energized and the cross interlock contact KB147C in group II is closed. The remaining contacts in group II will be closed if the control rods are fully inserted and the oil flows are above minimum operating requirements. Once these conditions are established, the circuit breaker will close and start the pump when the "start" push-button switch, S33, is closed momentarily. The group II interlocks are permissive to start only and have no further effect on the operation of the pump as long as the breaker remains closed. Once started, the pump will continue to run unless one of the group I interlocks or the "stop" push-button switch, S32, is opened momentarily.

In Fig. 4.2.2.2 the group I contacts are labeled IA and IB. The IB contacts, open when the coolant-salt pump (CP) off-gas activity and the fuel pump (FP) cooling water flow are abnormal, must always be closed to operate the pump. The arrangement of the IA contacts is altered by the operational mode selector circuits and the fuel pump circuit breaker position. In the "prefill" mode only helium is circulated in the fuel system. All of the IA contacts, which represent conditions that exist only when the loop is filled with fuel salt, are bypassed by the closure of contact K134D and have no effect on the operation of the pump. When the "operate" mode is established, contact K134D opens, contact KA136H closes, and all of the contacts in group I must close before the pump can be started. When the circuit breaker closes to run the pump, seal contact *a* closes to bypass contacts KA136H, K659C, and LS593C4, and they are no longer required for the pump to continue running.

The circuit breaker closing coil is connected to the same TVA bus which supplies the pump motor. This is acceptable because the pump will not run unless TVA or diesel generator power is available. The trip coil power supply must be more reliable to assure that the pump can be stopped at any time. For this reason the trip coil is supplied by the 250-V dc station battery bus. To isolate the 230-V ac and 250-V dc switchgear control circuits from the 115-V ac system, relays KA147, KB147, and KC147 are mounted in a terminal box near the switchgear units in the switchgear room. There is a separate relay box for each of the six motor starting units mentioned previously.

The "start" and "stop" push-button switches and the indicator lamps are located in the graphic symbol for the fuel pump on the main control board. Pump motor current and voltage indicators are located near the symbol.

### 4.2.3 Coolant-Salt Pump

The coolant-salt pump runs when power system circuit breaker K closes and connects the pump motor to a 480-V ac three-phase bus.[2] The circuit breaker is identical to the one described in the previous section for the fuel pump and is operated by control circuit 142, shown in Fig. 4.1.12. This circuit breaker can also be operated by manual switch S127, which bypasses circuit 142 completely to run the pump in an emergency situation.

Except for the fact that it has fewer interlock contacts, the arrangement of circuit 142 is identical to fuel pump control circuit 147 (see Figs. 4.2.2.1 and 4.2.2.2). Here, as in the fuel pump circuit, a path of electrical continuity must be established through both the group I and group II interlock arrangements by contact closures in order to start the pump. When the group I contacts are closed, the breaker trip relays KB142 and KC142 are energized and the cross interlock contact KB142C in group II is closed. The remaining contacts in group II will be closed if the coolant drain tank (CDT) freeze valves FV204 and FV206 are frozen and the oil flows to the pump are above minimum operating requirements. Once these conditions are established, the circuit breaker will close and start the pump when the "start" push-button switch, S35, is closed momentarily. The group II interlocks are permissive to start only and have no further effect on the operation of the pump as long as the breaker remains closed. Once started, the pump will continue to run unless one of the group I interlocks or the "stop" push-button switch, S34, is opened momentarily.

Again, as in the fuel pump circuit shown in Fig. 4.2.2.2, the group I contacts in circuit 142 may be considered in two parts. The single contact in the IB part, which opens when the coolant-salt pump (CP) cooling water flow is low, must always be closed to operate the pump. The arrangement of the contacts in the IA part is altered by the operational mode selector circuits and the coolant pump circuit breaker position. There is no "operate" mode requirement, but in the "prefill" operational mode, contact K134H is closed and both level interlocks are bypassed. Coolant-salt-level information is meaningless during "prefill" operations, when only helium is being circulated in the loop. When "operate" mode is established, contact K134H opens, and all three interlock contacts in group I must close before the pump can be started. Two level interlocks are needed during startup in both the fuel- and coolant-salt pump control circuits to accommodate the drop in salt level which occurs after the pump starts. The normal operating level is 8 to 12% lower than is required for starting, and a single switch set to meet both level conditions would not leave enough operating margin to prevent normal level fluctuations from stopping the pump and shutting down the reactor. When the circuit breaker closes to start the coolant pump, the "start" level interlock is sealed out of the control circuit by the closing of circuit breaker auxiliary contact *a*. Once started, only cooling water flow and normal operating salt level must be maintained for the pump to run continuously.

The "start" and "stop" push-button switches and the indicator lamps are located in the graphic symbol for the coolant pump on the main control board. Pump motor current and voltage indicators are located near the symbol. Manual switch S127, also located on the main board near the pump symbol, is connected directly in the power circuit breaker "close" and "trip" coil circuits (see Fig. 2.8.17). This permits the operator to override control circuit 142 completely and run the coolant pump under emergency conditions as described in Sect. 2.8.6.

### 4.2.4 Fill and Drain System

The fill and drain system provides for the orderly movement of fuel salt between vessels in the reactor primary system. The reactor vessel, the drain tanks, the interconnecting piping, and the control elements used for these operations are shown on the simplified diagram in Fig. 1.5.4, Part IIA. Molten salt is forced out of the vessels, except for the reactor core, which drains by gravity, when helium pressure is applied to the gas space in the supply vessel and vented from the gas space in the vessel receiving the moving salt. Helium pressure is supplied to the drain tanks, FD1, FD2, and FFT, through main supply valve PCV-517A1 and branch line valves HCV-572A1, HCV-574A1, and HCV-576A1 and is vented to the charcoal bed filters through valves HCV-573A1, HCV-575A1, and HCV-577A1. The drain tanks FD1, FD2, and FFT may also be vented to the fuel pump bowl through bypass valves HCV-544A1, HCV-545A1, and HCV-546A1. All of the valves have spring-loaded pneumatic actuators. Air is supplied to each actuator through a three-way solenoid valve as

shown in Fig. 4.2.4.1. When energized, the solenoid valve connects the actuator to the air supply, and when deenergized, the compressed air in the actuator is vented to atmosphere. The helium supply valve actuators are spring loaded to close when vented as shown in *b*, while the vent and bypass valves are opened by spring action as shown in part *a* of Fig. 4.2.4.1. See Sect. 6.8 for a description of the control valves used in the MSRE. The valves just described, together with the freeze valves in the interconnecting lines, control the movement of salt between vessels. The movement is controlled differently for each of the three reactor operating modes. These modes are:

1. *Prefill.* Transfers are permitted between fuel drain tanks only. The reactor vessel is isolated.
2. *Operate.* Filling the reactor core vessel is permitted from FD1, FD2, and FFT. The FST is isolated.
3. *Operate–run.* Drain tanks FD1 and FD2 are prepared at all times to receive salt when a reactor core vessel drain occurs.

**4.2.4.1 Drain tank helium supply valves.** The only way to open a helium supply valve and pressurize a drain tank is to energize the appropriate solenoid valve through either circuit 115 or 116, depending on which operational mode is in effect. When "prefill" mode is established, circuit 115 is connected to the control power bus through contact K134C as shown in Fig. 4.2.4.2. Several features which prevent the possibility of an accidental fill of the reactor vessel during transfer operations should be noted here: the fill and drain freeze valves FV104, FV105, and FV106 must close, and the weight switches must indicate that all of the salt is in the tanks before "prefill" mode can be established. Once established, the valves' permissive-to-thaw circuits (see circuits A665, A676, and A687 and Sect. 4.3) are deenergized. Therefore, all salt transfers between tanks FD1, FD2, FFT, and FST must be routed through transfer lines 107, 108, 109, and 110. Transfers during nuclear power operations are not permitted. At this point it is normal for both freeze valves on a single tank to be closed, and it is possible for pressure to build up in the tank even when the helium supply valve is closed, if it leaks. Under these conditions an uncontrolled transfer could occur if one of the two freeze valves were to open unexpectedly. To avoid this, drain tank pressure switch interlocks operate in the permissive-to-thaw circuits (see circuits A698, A709, A720, and A731) and prevent the transfer freeze valves FV107, FV108, FV109, and FV110 from opening unless the pressure in the selected tank is less than 5 psig. This low-pressure interlock is automatically bypassed in each circuit when the freeze valve opens so that the valve will remain open when the tank is pressurized to transfer salt. Also, if both freeze valves on a tank are open, interlocks in circuits 117, 118, and 119 prevent the tank's vent valves from closing. The fuel storage tank is at the same elevation as the reactor vessel. If line 110 filled with salt and both freeze valves on a tank were then thawed, salt would siphon directly into the reactor.

Once the reactor core vessel is isolated, transfer operations may take place between any two of the four fuel storage tanks. Since they may be in either direction, 12 different transfer operations are possible. For each operation, two specific freeze valves are opened and six others are closed. To avoid transfers other than those intended, the contacts of supply tank selector switch S5 and receiver tank selector switch S4 are combined with freeze valve position and drain tank pressure interlock contacts to prevent the helium supply valves from being energized and applying pressure to a tank unless:

1. the supply selector switch is set to select that tank as the supply tank and the freeze valve connecting the selected tank to the transfer lines is open (this is accomplished in contact matrix III in Fig. 4.7.4.2);
2. the receiver selector switch is set to select a tank other than the selected supply tank (also in matrix III) and the freeze valve connecting the selected receiver tank to the transfer lines is open (matrix II);
3. all other freeze valves connected to the transfer lines are closed (this is accomplished in matrix I);
4. the pressure in the selected tank is less than the maximum allowed and the manual switch for the valve supplying helium to the selected tank is closed by the operator (Matrix V);
5. the nuclear safety system interlocks in matrix VI are closed.

All of the supply valves are subject to the above restrictions except PCV-517A2, which is always energized unless one of the safety interlocks in matrix VI is open. The FST supply valve can be energized only when the system is in the "prefill" operating mode and is subject to additional restrictions imposed by matrix IV. The contacts in this matrix prevent the FST from being pressurized unless:

1. the weight switches indicate that the selected receiver tank is nearly empty and the bypass valve on this tank is open,

2. the temperature switches in circuits 101 and 102 indicate that the temperature of the ring-joint flange cover on the fuel-salt filter (FSF) in line 110 is less than the maximum allowed.

Selector switches S4 and S5 are the rotary type with cam-operated contacts which maintain their position when the operating handle is released. They are located in the main control room on the part of the console shown in Fig. 4.2.1.1., and each switch has four positions identified FST, FD1, FD2, and FFT. Manual switches for each helium supply valve are located in the valve symbol near the drain tanks on the main control board.

To illustrate the operation of circuit 115, assume that drain tank FD1 is full of fuel salt, that "prefill" mode is established, switch S4 is turned to position FD2, and S5 to position FD1. As a result, contacts marked * thus are closed. Further assume that the operator has closed and opened the appropriate freeze valves and that tank pressures as well as safety measurements are not out of acceptable limits. If these assumptions prevail, contacts marked ** thus are closed. Except for manual switch HS572A1, the circuit to the FD1 helium supply valve is now complete. This switch may be closed at the operator's discretion to pressurize FD1, forcing salt out of FD1 and into FD2. The movement of salt may be stopped at any time by opening the switch. Notice how the supply and receiver selector switches force the operator to establish the correct combination of open and closed freeze valves for the desired transfer before the helium valve can be opened to pressurize the tank.

To conduct reactor core vessel fill operations, the same helium supply valves, except FST valve HCV-520A2, must again be energized – this time through circuit 116. Circuit 116 is connected to the control power bus through contact KA136C, which closes when the "operate" mode of operations is established. Again, as in "prefill" mode, the interlock arrangement includes several protective features which prevent uncontrollable movements of salt between tanks and to the core vessel.

Before the "operate" mode can be established, the transfer lines must be closed and at least one fill and drain valve must be opened. The transfer line freeze valves FV107, FV108, and FV109 are closed to isolate the FST from the other tanks. Once "operate" mode is established, the valves' permissive-to-thaw circuits are deenergized (see circuits A698, A709, and A720), and all salt transfers between the reactor vessel and the drain tanks must be routed through fill lines 103, 104, 105, and 106. During the changeover phase from "prefill" to "operate" mode it is normal for both freeze valves on a single drain tank to be closed. Here again the tank could be pressurized through a leaking supply valve, and if one of the freeze valves opened unexpectedly, the reactor vessel could be unintentionally filled with fuel salt. This is prevented by differential pressure interlocks which operate in the permissive-to-thaw circuits (see circuits A665, A676, and A687) to keep the fill and drain freeze valves FV104, FV105, and FV106 from opening unless the pressure in the tank associated with a particular valve is less than 5 psig greater than the pressure in the fuel pump bowl. After the freeze valve opens, this interlock is bypassed so that the valve will remain open when the tank is pressurized to fill the reactor vessel. Also, as described for "prefill" operations, the drain tank vent valves cannot be closed if both freeze valves on a tank are closed.

With "operate" mode established, some additional conditions must be satisfied before circuit 116 can be energized to fill the reactor vessel. These are:

1. Freeze valve FV103 must be closed (matrix VII).

2. Nuclear instruments must be working properly (matrix VIII). Contact K195A and the weight switch WQS-1002A2-A1 are closed when the reactor vessel is less than half full of fuel salt and operating at the neutron source level. When flush salt is used, the weight switch is bypassed by the drain selector switch contact S6R. With the vessel full of fuel salt, the wide-range counting channels are needed, and either contact K193E or 194E must be closed.

3. The fuel pump must be "off" and the level of salt in the pump bowl must be below the maximum allowed (matrix IX).

All of the requirements for energizing circuit 116 mentioned to this point are preliminary to the start of actual fill operations, but they must prevail continuously during this operation or the helium supply valves will open and stop the flow of salt into the reactor vessel.

The reactor vessel may be connected directly to and filled from any one of three tanks: FD1, FD2, and FFT. To prevent transfers between tanks and unintentional fills, the contacts of drain tank selector switch S6 are combined with fill and drain freeze valve position and drain tank pressure interlock contacts to prevent the helium supply valves from being energized and applying pressure to a tank unless:

1. the drain tank selector switch is set to select that tank (matrix X),

2. the fill and drain freeze valve connecting the selected tank to the reactor vessel is open and all valves on the other tanks are closed (matrix X),
3. the pressure in the selected tank is less than the maximum allowed and the manual switch for the valve supplying helium to the selected tank is closed by the operator (matrix V),
4. the nuclear safety system interlocks in matrix VI are closed.

To illustrate the operation of control circuit 116, assume again that drain tank FD1 is full of fuel salt, freeze valve FV106 is open, drain selector switch S6 is turned to position FD1, and "operate" mode is established. Contacts marked * thus are closed. Assume further that the operator has closed the other drain tank freeze valves, that the status of the fuel pump, freeze valve FV103, and the nuclear instruments is correct, and that tank pressures as well as safety measurements are not out of acceptable limits. If these assumptions prevail, contacts marked ** thus are closed. Again manual switch HS557A1 may be closed at the operator's discretion to pressurize FD1 and force fuel salt up and into the reactor vessel.

Drain tank selector switch S6, also located on the part of the console shown in Fig. 4.2.1.1, is the same type as S4 and S5, but it has only three positions: FD1, FD2, and FFT. It is equipped with a solenoid-operated latch to prevent the operator from switching into or out of the FFT position unless he first closes push-button switch S112 to release the latch (see circuit 93 in Fig. 4.1.8). The flush salt tank FFT is not equipped to contain fuel salt, and the latch is a positive reminder that the switch must be in either the FD1 or FD2 position when fuel salt is in the reactor vessel. Also, moving the switch to the FFT position automatically adjusts the calibration of the fuel pump bowl level measuring instruments to compensate for the difference in the densities of the fuel and coolant salts. This is accomplished through circuit 94, Fig. 4.1.8. In the FFT position, switch contact S6T is closed and relays KA94 and KB94 are energized. Contacts on these relays operate in the output signal circuits of the fuel pump level transmitters, LT-593C and LT-596B, to adjust the indicated salt level as described in Sect. 6.23.

With the reactor vessel full of salt, the operator closes EV103. Contact K660B opens to deenergize circuit 116 and close all of the helium supply valves.

There is one exception to the rule that prevents salt transfers between tanks FD1 and FD2 through fill lines 105 and 106. It is standard operating procedure to keep two freeze valves, FV105 and FV106, open when the reactor is operating. This provides additional assurance that a drain is always possible, but when an unexpected drain does occur, a part of the salt goes to each drain tank. To refill the reactor vessel using normal procedures, the control system must be returned to the "prefill" mode, and all of the salt must be transferred to one tank or the other through transfer lines 108 and 109. In this case the time required by the normal procedure is excessive; therefore, jumpers are provided in circuit 116, matrix X, to bypass contacts KA681C (FV105 closed) and KA692C (FV106 closed) – see Fig. 4.1.9. This allows fuel salt to be transferred between drain tanks FD1 and 2 through lines 105 and 106. Although this procedure does involve some risk of transferring fuel to the reactor vessel, the vessel is prepared for a fill anyway; therefore everything is safe should one occur inadvertently.

The helium supply valves also serve as safety block valves. Since PCV-517A2 combines with HCV-572A2, HCV-574A2, and HCV-576A2 to form redundant pairs, the safety interlocks and wiring in matrix VI of circuit 127 and those in the same matrix of circuits 115 and 116 are installed in separate conduits.

Helium is admitted to pressurize the coolant drain tank by closing hand switch HS-511A1 in circuit 126 (Fig. 4.1.9); HS-511A1 is located on the main control board. Closing the switch will energize the solenoid to open supply valve HCV-511A1 unless the safety system demands an emergency drain (contacts KA140E and KA141E open) or the helium supply pressure is low (contacts KC40F and KC41A open). During filling operations contacts K100C and K107C also open to close the supply valve and stop the fill if pump bowl level or the drain tank pressure becomes too high.

**4.2.4.2 Drain tank vent valves.** Before a tank can be pressurized, both the bypass and vent valves on the selected tank must be closed. The vent valves on FD1, FD2, and FFT close when the solenoids in circuits 117, 118, and 119 are energized. The contact arrangements in all three circuits are identical, and the circuit shown in Fig. 4.2.4.3 is typical. Normally all three valves are closed unless a transfer, fill, or drain operation is in progress. They will remain closed as long as the following conditions exist:

1. At least one of the freeze valves associated with each tank is closed (matrix II). It was explained previously that this helps prevent accidental transfers and fills. It is one of the requirements for establishing "operate" mode.
2. There is no request for a normal drain, and the fuel drain demand switch (S7) contacts of matrix I are closed in all three circuits.

3. The level in the pump bowl is not high, the pressures in the tanks are not high, there is no request for an emergency drain, and all of the interlock contacts in matrices III and V are closed.
4. The manual switch contacts in matrix IV are shunted by the bypass valve position interlocks. This prevents the pump bowl from being pressurized when the helium supply valve opens.

As soon as the bypass valve on the selected drain tank (determined by the position of switch S6) closes, the contact shunting the manual switch (K103C in circuit 117) opens, allowing the vent valve to open. At this point the operator uses manual switch HS573A2, located on the main board, to open and close the supply tank vent valve as required for transfer and fill operations. For a transfer from one tank to another, the same procedure is followed to close and then open the bypass and vent valves on the receiving tank. If, during a reactor filling operation, the selected drain tank pressure or the pump bowl level exceeds preset limits, the interlock contacts in matrix III open to relieve the pressure in the tank and lower the level of salt in the pump bowl. Both the vent valve and the bypass valve on the selected drain tank are opened when a drain is initiated. Since both of these valves are controlled by identical contact arrangements in matrix I, the operation of the drain tank selector switch (S6) and the fuel drain switch (S7) will be discussed in the following section after the bypass valve circuits are described.

The use of the FST vent valve, HCV-692A1, is restricted by control-grade interlocks which operate automatically to protect the tank from excessive pressures and prevent accidental transfers of salt to the other drain tanks and the reactor vessel. The solenoid valve in circuit 120 (Fig. 4.2.4.3) must energize and close the vent valve before the FST can be pressurized. The solenoid will energize when the operator closes main board switch HS-692A2 (matrix VIII), provided the following required conditions are in force:

1. The drain tank pressure is not high (contact K112C closed).
2. All of the valves in at least one of the three sets listed below are closed to isolate the reactor vessel from the FST. The contacts are shown in matrix VII of Fig. 4.2.4.3.
   *a.* Drain tank freeze valve FV110 frozen (contact K736C closed).
   *b.* Fill and drain freeze valves FV104, FV105, and FV106 frozen (contacts K703E, 714E, and 725E closed).
   *c.* Transfer freeze valves FV107, FV108, and FV109 frozen (contacts KA670F, KA681F, and KA692F closed).

FST vent valve HCV-692A is open when fuel is processed, and the resulting off-gas, which contains hydrogen, is discharged into containment air duct 940. As long as sufficient air flow is maintained, the concentration of hydrogen in the duct will not become great enough to form an explosive mixture. The flow rate is monitored by switch FS940B2, which remains open if the rate of flow in the duct is above the minimum required. Switch S113 is closed when processing operations begin, but the FST vent valve remains open unless the flow in the duct drops below the minimum required. In that case circuit 120 is energized to close the vent valve and shut off the flow of off-gas from the tank.

A lamp located near switch S113 on the main control board gives visual indication that contact S113A is closed and flow interlock FS940B2 is in the valve circuit. The lamp is energized through contact S113B in circuit 429 (Fig. 4.1.37).

The operator manipulates manual switch HS547A2, on the main control board, to energize the solenoid in circuit 121 and close the coolant drain tank (CDT) vent valve HCV547A1. Automatic control-grade interlocks open to deenergize the solenoid and prevent the valve from closing if:

1. there is an emergency coolant drain demand (contacts KA140A and KA141A open),
2. pressure in the CDT is excessive (contact K107A opens),
3. the level of the salt in the coolant pump bowl is too high (contact K100A opens); during a fill operation this will allow salt to drain back into the CDT and lower the level in the pump bowl.

**4.2.4.3 Drain tank bypass valves.** The drain tank bypass valves HCV-544A1, HCV-545A1, and HCV-546A1 close when control circuits 131, 132, and 133 are energized. The contact arrangements in all three circuits are identical, and the circuit shown in Fig. 4.2.4.3 is typical. When the reactor vessel is empty, there is no request for a normal drain, and all of the S7 switch contacts in matrix I are closed. If the requirements for filling are satisfied, the safety interlocks in matrix VI are also closed, and the operator may open and close the bypass valves by manipulating manual switches HS-544A2, HS-545A2, and HS-546A2, all located on the main control board. When there is no

demand for a drain, the operator has the option of leaving the valves open or closed, but normally they are energized and remain closed.

The most important interlock function is to deenergize the solenoids and open the bypass valves when a drain is initiated. Opening the bypass valves allows the pressures in the fuel pump bowl and the drain tank gas spaces to equalize so that the salt drains freely from the reactor vessel into the selected tank. A drain may be initiated by the operator, in which case the selector switch contacts in matrix I open, or it may be initiated automatically by the emergency drain circuits. In either case, as previously stated, both the vent and bypass valves are opened when a drain is initiated.

Under emergency conditions the contacts in both matrices V and VI operate to open the valves on all three tanks. The safety interlocks in these matrices and the valves are redundant, since either the bypass or the vent valve provides the venting action necessary for a successful drain. The reactor vessel will not drain completely if only the vent valve opens, but the drain will be sufficiently complete to preclude a nuclear excursion or a major salt spill. For this reason the safety portions of these circuits are physically separated, as described in Sect. 7.2.

Under normal conditions the drain is initiated by the operator, and only those valves on the tank selected to receive the salt are deenergized by the opening of contacts in matrix I. The position of drain tank selector switch S6 determines which one of the three tanks will receive the salt when a drain does occur. This switch must always be in one of three possible positions, FD1, FD2, or FFT. Lamps mounted in the drain tank graphic symbols on the main control board are also energized through contacts on switch S6 to visually identify the selected drain tank. The lamp circuits are shown in Fig. 4.2.4.4. The S6 switch contacts in the circuits that control the vent and bypass valves connected to the selected drain tank are always open, and the selected circuits are energized through the normal drain switch (S7) contacts only. This is the condition of the circuits shown in Fig. 4.2.4.3. The S6 contacts in the circuits that control the other vent and bypass valves are closed, and these circuits remain energized through both the S6 and S7 switch contacts. A normal fuel drain is initiated when switch S7, which is located on the operator's console as shown in Fig. 4.2.1.1, is turned to the "drain" position. In this position all of the S7 contacts open. The valves connected to the selected tank open since both contacts in matrix I are now open, but the valves connected to the other tanks remain closed since the solenoids are still energized through the S6 contacts in matrix I.

To illustrate, assume that drain tank selector switch S6 is left in the FD1 position after the filling operation described in a previous example. Contacts S6C and S6D in matrix I of Fig. 4.2.4.3 are open, but the circuits are completed through contacts A and D on fuel drain switch S7, which is in the "off" position. As soon as switch S7 is turned to the "drain" position, contacts A and D open to deenergize circuits 117 and 131, and both valves on the selected drain tank, FD1, open. The circuits controlling the valves connected to the other tanks, FD2 and FFT, remain energized through the closed S6 contacts.

Once the reactor vessel is filled with salt, a drain could occur at any time; therefore the selected drain tank must be maintained ready to receive salt at all times. The selected drain tank is in condition to receive salt if:

1. the bypass valve is open,
2. the weight of salt in the tank is low,
3. the freeze valve connecting the tank to the fill line is open,
4. the freeze valves connecting the other tanks to the fill line are closed.

The operator is responsible for maintaining these conditions when the reactor vessel is full of salt. If the selected tank is not in condition to receive a drain, circuit 803, also shown in Fig. 4.2.4.4, produces an audible and visual alarm in the main control room. This circuit monitors conditions in all three tanks, but contacts on drain tank selector switch S6 bypass all except those which represent conditions in the selected tank (see the logic diagram in Fig. 4.1.72). Operating procedures require that both FD1 and FD2 be maintained ready to receive a drain when fuel salt is in the reactor vessel. When switch S6 is in either of these positions, circuit 803 will produce an alarm if either or both FD1 and FD2 are not in condition to receive a drain. When switch S6 is in the FFT position, the FD1 and FD2 interlocks are bypassed, and only those contacts which represent conditions in FFT will produce an alarm.

Circuit 130 energizes to close the coolant drain tank (CDT) vent valve HCV-527A1. The circuit will energize when manual switch HS527A on the main control board is closed unless the control system demands an emergency drain, in which case the control-grade interlock contacts KA140C and KA141C open.

### 4.2.5 Pump Bowl Helium Purge Valves

Valves FCV-516B1 and FCV-512A1 are the final elements in control systems which regulate the flow of helium purge gas to the fuel- and coolant-salt pump bowls. These systems are described in Sect. 3.5. In addition to automatic flow control, the valves also provide safety blocking action. The pneumatic operator on each valve is connected to a flow controller through three-way solenoid valves FCV-516B2 and FCV-512A2. When the solenoid valves in circuits 128 and 129 (see Fig. 4.1.9) are energized, the control valves are throttled by the air signals from the controllers to regulate the flow rate of helium purge gas entering the fuel- and coolant-salt pump bowls. This is the mode of operation for normal conditions. There are no manual switches in either circuit, and both are energized continuously unless:

1. pump bowl pressure is too high, in which case switches PSS-522A and PSS-528A open and deenergize the solenoid valves,
2. helium supply pressure is too low, in which case the contacts actuated by safety system relays KB40 and KB41 open and deenergize the solenoid valves.

In either case the instrument air signal from the controller is shut off, the control valve operator is vented to atmosphere, and the valves close. The pressure switches in the first case are control-grade interlocks, but the relay contacts in the second case are safety-grade interlocks, since the valves must close to block the escape of radioactive gas from the pump bowl.

### 4.2.6 Pump Bowl Vent Valves

The fuel- and coolant-salt pump bowl vent valves provide a low-resistance path for venting helium cover gas from the pump bowls to the off-gas system, as shown in Figs. 1.5.4 and 1.5.8, Part IIA. In the fuel system the path provided through HCV-533A1 bypasses the particle trap and the main charcoal beds in line 522 to vent the pump bowl directly to the auxiliary charcoal beds. Vent valve HCV-536A1 in the coolant system bypasses pressure control valve PCV-528A to vent the pump bowl directly to the containment air system.

The vent valves open when the solenoid valves shown in circuits 122 and 123 (Fig. 4.1.9) are deenergized. For normal operating procedures the valves are controlled manually at the operator's discretion with hand switches, HS-533A2 and HS-536A2, located on the main control board. The only automatic restrictions imposed on the operation of either valve are in circuit 122, where safety-grade interlock contacts K22C and K23C open to prevent valve HCV-533A1 from closing unless the fuel pump bowl pressure is less than 25 psig (see Fig. 4.1.2).

### 4.2.7 Normal Fuel Drain

A normal, or routine, fuel drain is initiated when switch S7, which is located on the operator's console as shown in Fig. 4.2.1.1, is turned to the "drain" position. As described in Sect. 4.2.4.3, switches S6 and 7 operate to assure that the selected drain tank is always ready to receive salt when the reactor vessel is full. The freeze valve on the selected tank is also open, and a drain will occur if drain valve FV103 opens.

When switch S7 is turned to "drain," the vent and bypass valves on the selected tank open immediately, and contact S7G closes in circuit 148, Fig. 4.1.12. One of the three parallel-connected contacts, S6N, S6P, and S6Q, will also be closed depending on the position of drain tank selector switch S6. If the freeze valves on the tanks other than the one selected are frozen, relay K148 energizes and contact K148A opens in circuit A655, Fig. 4.46, to thaw reactor drain valve FV103. For instance, if switch S6 is in the FD1 position, contact S6N is closed. Contacts KB670A and KB681A, connected in series with S6N, also close to complete the circuit through relay K148 if freeze valves FV104 and FV105 on drain tanks FFT and FD2 are frozen. The logic diagram for circuit 148 is shown in Fig. 4.1.73.

### 4.2.8 Coolant System Drain Demand

When either one or both of the coolant drain demand circuits 140 and 141, shown in Fig. 4.1.12, deenergize, the coolant drain tank (CDT) vent and bypass valves open, the CDT freeze valves thaw, and the salt in the coolant circulating loop, including the radiator, drains into the CDT (see Fig. 4.2.8.1). These actions are accomplished by the following relay contact operations:

1. Contacts KA140A and KA141A open in circuit 121 to open the CDT vent valve HCV-547A1.
2. Contacts KA140C and KA141C open in circuit 130 to open the CDT bypass valve HCV-527A1.
3. Contacts KA140E and KA141E open in circuit 126 to close the CDT helium supply valve HCV-511A1.
4. Contacts KB140A, KB141A, and KB140D open in circuits B765, A765, and 776 to thaw freeze valves FV204 and FV206.

5. Contacts KA140D and KA141D open in circuit 1083 to annunciate in the main control room.

Conversely, the coolant-salt system cannot be filled unless circuits 140 and 141 are energized.

Both routine and emergency drains are initiated by opening contacts in the drain demand circuits. For routine operations contacts S95A and 95C open when manual switch S95 on the operator's console (see Fig. 4.2.1.1) is turned to the drain position. Emergency action is required if the coolant-salt temperature at the radiator outlet becomes abnormally low. When this occurs, three independent temperature measuring channels operate switches TSS202A2, TSS202B2, and TSS202C2 to deenergize the relays in safety circuits 4, 5, and 6 (see Fig. 4.1.1). Contacts on these relays are connected in a two-out-of-three coincidence matrix in circuits 140 and 141 so that if any two of the relays are deenergized, circuits 140 and 141 will also be deenergized to initiate a coolant system drain.

Although arranged in a one-out-of-two configuration for increased reliability, circuits 140 and 141 are not safety grade. They are actually control-grade extensions of the load scram circuits described in Sect. 2.8.6. The temperature switches in circuits 4, 5, and 6 are identified in Fig. 1.5.2 (Part IIA) as input reference number XVIII. Circuits 140 and 141 provide corrective action 3.c resulting from input reference condition number XVIII in Table 1.5.1, Part IIA.

### 4.2.9 Afterheat Removal System

Circuits 143, 144, and 145 in Fig. 4.1.12 control cooling water supply valves HCV-882C1, FSV-806A, and ESV-807A in the drain tank afterheat removal system. This system is shown in Fig. 1.5.7 and is described in Section 1.5.3, Part IIA. For normal operating conditions the contacts in the circuits are closed and all three valves are energized. Both ESV-806A and B are direct-acting two-way solenoid valves which close when energized. HCV-882-C1 is a pneumatically operated three-way valve, which is controlled by three-way solenoid valve HCV-882-C2 in circuit 143.

If the temperature of the fuel salt in drain tank FD1 exceeds 1300°F, temperature switches open automatically to deenergize control relay K258 in Fig. 4.1.20. This opens contact K258A in circuit 144 to deenergize ESV-806A, which opens to allow maximum water flow to the steam dome on fuel drain tank FD1. When the fuel-salt temperature decreases to 1200°F, the temperature switches automatically reclose, and ESV-806A returns to the closed position. ESV807A supplies water to the steam dome on fuel drain tank FD2 and is controlled by circuits 259 and 145, which are identical to those just described.

Normally the steam dome condensers are supplied with tower cooling water, but diversion valve HCV-882-C1 provides an alternate supply of water. When cooling tower water pump discharge pressure falls below a minimum value, pressure switch PS-851-B1 in circuit 143 opens to deenergize solenoid valve HCV-882-C2. This causes HCV-882-C1 to change positions and shift the cooling water supply from the tower to the process water main. The valve may also be controlled by manual switch HS882C, which is located in the water room (WR) on the water panel (WP).

## REFERENCES

1. ORNL drawing D-KK-C-41194, Wiring Diagrams—Bus No. 4, Breakers A-2, A-3, F, D, and E.
2. ORNL drawing D-KK-C-41195, Wiring Diagrams—Bus No. 3, Breakers A-1, A-5, K, L, M, N, G, H, and J.

## 4.3 FREEZE VALVES

### 4.3.1 Introduction

The flow of salt in the MSRE fuel and coolant systems is controlled by freezing or thawing a short plug of salt in a flattened section of 1½-in.-diam pipe called a freeze valve. A simplified version is illustrated by the schematic diagram shown in Fig. 4.3.1*b*. In this discussion the flat section is referred to as the center, and the transitions from the flat to the round sections are referred to as shoulders. The small pots in the lines on either side of the valve are called siphon breaks. The extra volume of salt contained in these pots and the pipe configuration ensure that the freeze valve section will always be full of salt.

The valve freezes (closes) when a cooling stream of gas,* directed against the center section, causes the salt contained there to solidify. A gas flow of 15 to 35 scfm[1] will freeze a valve, initially at 1200°F, in 15 to 30 min if the salt is not flowing. A valve cannot be frozen if salt is flowing through it. Once the valve freezes, the gas flow is reduced to 3 to 7 scfm,[1] a rate which is sufficient to maintain the frozen condition but not enough to extend the size of the plug.

The valve thaws (opens) when the flow of cooling gas is stopped. The heat conducted along the pipe wall from the pipe line heaters adjacent to the center section

*Cell atmosphere gas, consisting of about 95% nitrogen and 5% oxygen.

will melt a frozen plug in 10 to 25 min, depending on the particular application. Initially this heat was provided by an electrical resistance-type heater attached to the center section, but operating experience proved that it is unnecessary.

There are 12 freeze valves in the MSRE, all of which provide "on-off" control action. The details of their design, construction, and operating characteristics are described in ORNL-TM-728, Part I.[1] The general arrangements at the valves are shown in ORNL-TM-728, Part I, Figs. 5.31, 5.32, 5.33, and 5.34.[1]

The control circuit diagrams for all 12 valves are shown in Figs. 4.1.46 to 4.1.51 inclusive. Although the basic circuit design and operating characteristics are the same for all circuits, individual differences make it convenient to divide them into four major groups. These are:

| | |
|---|---|
| Group I | FV103 |
| Group II | FV104, FV105, and FV106 |
| Group III | FV107 through FV112 |
| Group IV | FV204 and FV206 |

Groups I and II control the flow of molten salt between the reactor vessel and the three drain tanks. Four of the six group III valves are in lines connecting the fuel drain tanks to the fuel processing tank; the remaining two are in lines connected to the fuel processing tank only. Group IV valves are in the coolant-salt system. See Fig. 1.4.3, ORNL-TM-729, Part IIA.[4]

### 4.3.2 Basic Circuit Operation

The circuit for group II freeze valve FV105, Fig. 4.1.47, will be used as a typical example to explain the basic operation which is applicable to all the circuits. The differences between this circuit and those in the other groups will be explained at the appropriate time. This particular valve circuit is used as an example primarily because it utilizes every type of interlock used in all of the circuits. A simplified version, shown in Fig. 4.3.1*c*, will be used to explain the basic operating characteristics of the freeze valve control circuits. The operator controls the valve with a manually operated switch, HS-909A, located on the main control board (see Fig. 4.3.1*a*). The switch has two positions, "freeze" and "thaw." Once the switch is set to the desired position, the control circuit functions automatically to provide the following actions:

1. Thaw the valve on demand. When the valve is frozen and the switch is turned to the "thaw" position, the cooling air is shut off, allowing the flow of heat from adjacent pipes and the shoulder heaters to thaw the frozen plug.
2. Freeze the valve on demand. When the valve is thawed and the switch is turned to the "freeze" position, the cooling air is turned on at the maximum flow rate, and the valve begins to cool. When the temperature at either shoulder falls below the value at which the salt in the pipe solidifies, the flow of cooling air is reduced to a rate sufficient to maintain the plug but not enough to extend its size beyond the shoulders.
3. Actuate operational interlocks. The circuit energizes relays to indicate the condition of the valve (frozen or thawed). Contacts on these relays are used as permissive interlocks in the master control circuits (see Sect. 4.2).
4. Indicate the valve's operational status. The circuit energizes lamps which are located near the switch on the main board to provide continuous visual indication of the valve's operational status. Additional information is also provided by the main board annunciators.

The condition of the valve is determined by measuring the temperatures at the center and on both shoulders of the valve. Two thermocouples are provided at each location for this purpose. Thermocouple locations for all valves are shown on ORNL Dwg. D-HH-B-40543.[2] One thermocouple at each position is connected to a solid state temperature switch which consists of two parallel-connected control modules in an Electro Scientific monitor system (see Sect. 6.15). This is illustrated by Fig. 4.3.1*b*. The switches operate, together with the manual switch HS-909A in the circuit shown in Fig. 4.3.1*c*, to control the cooling air supply valves, position indicator lamps, operational interlocks, and annunciators.

The operating set points of the temperature switches differ from one valve to another. Actual settings were determined in the field by trial and error and are recorded in the MSRE Process Instrument Switch Tabulation. In actual practice, a valve is thawed when the temperature of the salt is slightly above 850°F and is frozen when the temperature is slightly below 850°F. For the purpose of this explanation, the switches are set to operate at the nominal temperature values given in Table 4.3.1.

The control circuit shown in Fig. 4.3.1*c* operates as follows: Assume that the valve is thawed and manual switch HS-909A is turned to the "thaw" position (contact HS-909-A2 is closed, contact HS-909-A1 is

**Table 4.3.1. Freeze valve temperature switches**

Nominal actuation set points

| Switch contact[a] | TE location | High-temperature set point | | Low-temperature set point | |
|---|---|---|---|---|---|
| | | For increasing temperature | For decreasing temperature | For increasing temperature | For decreasing temperature |
| 1A1[b] | Shoulder | >800°F contact opens | <750°F contact closes | | |
| 1A2 | Shoulder | | | | <650°F contact opens |
| 2A1 | Center | >1000°F contact closes | | | |
| 2A2[c] | Center | | | | <550°F contact closes |
| 3A1[b] | Shoulder | >800°F contact opens | <750°F contact closes | | |
| 3A2 | Shoulder | | | | <650°F contact opens |

[a]Numbers apply to all valves.
[b]Switch has hysterisis.
[c]Not used in circuits for FV107 through FV112.

**Table 4.3.2. Freeze valve operational modes**

| Operational mode | Switch position | Valve condition | Valve temperature (°F) | | Indicator lamp | | Coolant air | | Alarm | Interlock relays | |
|---|---|---|---|---|---|---|---|---|---|---|---|
| | | | At center | At shoulders | Red | Green | Blast | Hold | | Frozen K681 | Thawed K682 |
| 1 | Thaw | Thawed | >1000 | >750[a] | On steady | Off | Off | Off | Off | Deenergized | Energized |
| 2 | Freeze | Thawed | >1000 | >750[a] | On steady | Flash | On | On | On | Deenergized | Deenergized |
| 3 | Freeze | Intermediate | <1000 | >750[a] | Off | Flash | On | On | On | Deenergized | Deenergized |
| 4 | Freeze | Frozen | <1000 | <750[a] | Off | On steady | Off | On | Off | Energized | Deenergized |
| 4A[b] | Freeze | Deep frozen | <1000 | <600[a] | Off | On steady | Optional | Optional | On | Energized | Deenergized |
| 5 | Thaw | Frozen | <1000 | <750[a] | Flash | On steady | Off | Off | On | Deenergized | Deenergized |
| 6 | Thaw | Intermediate | <1000 | >750[a] | Flash | Off | Off | Off | On | Deenergized | Deenergized |
| Any | Any | Frozen | | <650[a] | | | | | On | | |

[a]Temperature at either or both shoulders of valve.
[b]Applicable to FV107 through FV112 only.

**Table 4.3.3. Contact development diagram for typical freeze valve control circuit as shown in Fig. 4.3.1*c***

X denotes closed contact
O denotes open contact

| Contact | Valve operational mode | | | | | | Contact location (circuit No.) |
|---|---|---|---|---|---|---|---|
| | 1 | 2 | 3 | 4 | 5 | 6 | |
| HS-909A-1 | O | X | X | X | O | O | 677 |
| HS-909A-2 | X | O | O | O | X | X | 678 |
| TS-FV105-2A1 | X | X | O | O | O | O | 672 |
| TS-FV105-1A1 | O | O | O | O | O | X | 673 |
| TS-FV105-3A1 | O | O | O | O | O | X | 673 |
| K673A | X | X | X | O | O | X | 677 |
| K672C | X | X | O | O | O | O | 679 |
| K672D | O | O | X | X | X | X | 679 |
| K673B | O | O | O | X | X | O | 680 |
| K673C | X | X | X | O | O | X | 680 |
| K673D | O | O | O | X | X | O | 681 |
| K672E | X | X | O | O | O | O | 682 |
| K681A | O | O | O | X | O | O | 904 |
| K682A | X | O | O | O | O | O | 904 |

open). When the valve is fully thawed, the center temperature is above 1000°F and the shoulder temperatures are above 800°F. Under these conditions, switch contact TS-FV105-2A1 is closed and control auxiliary relay K672 is energized; switch contacts TS-FV105-1A1 and 3A1 are open and relay K673 is deenergized. Relay contacts K672C, K672E, K673A, K673C, and K682A are closed and contacts K672D, K673B, and K673D are open. The solenoid valves HCV-909A2 and A3 are deenergized and the cooling air is shut off; the red lamp is on steady, the green lamp is off, and the annunciator on the main board (circuit 904) is off. The circuit in Fig. 4.1.3*c* is shown as described. The valve is in operational mode 1. Valve conditions for each operational mode are listed in Table 4.3.2. Table 4.3.3 shows the position of each contact (open or closed) for each of the six operating modes.

If the manual switch is now turned to the "freeze" position, contact HS-909A-2 opens and HS-909A-1 closes; solenoid valves HCV-909A-2 and HCV-909A-3 energize immediately, and cooling air is applied to the center of the valve at the maximum rate; circuit 680 is energized through the normally closed contact K673C, and the green lamp turns on flashing[3] to indicate that the valve, though still thawed, is in the process of freezing; operational interlock relay K682 deenergizes, and contact K682A opens in annunciator circuit 904 to produce an audible and visual alarm. The valve is now in operational mode 2.

The valve is now being cooled, and when the center temperature falls below 1000°F, contact TS-FV105-2A1 opens, relay K672 deenergizes, and contact K672C opens to turn off the red lamp. This indicates that the valve can no longer be considered thawed, but the green lamp is still flashing, which indicates that the valve has not yet reached the frozen condition. The valve is now in operational mode 3.

As the valve continues to cool, the shoulder temperatures fall below 750°F to open contacts TS-FV105-1A1 and 3A1; relay K673 energizes, contacts K673A and K673C open, contacts K673B and K673D close; solenoid valve HCV-909-A3 deenergizes, the green lamp is turned on steady, operational interlock relay K681 is energized, and contact K681A closes to clear the annunciator. The valve is now in operation mode 4; all of the required conditions are satisfied, and the valve is frozen.

If the manual switch is now turned to the "thaw" position, contact HS-909A-1 opens and HS-909A-2 closes. This starts a sequence of control actions which cause the valve to thaw. Solenoid valves HCV-909A-2 and HCV-909A-3 deenergize immediately to shut off the flow of cooling air; operational interlock relay K681 also deenergizes immediately and opens contact K681A in annunciator circuit 904 to produce an audible and visual alarm. Since circuit 679 is energized through the normally closed contact K672D, the red lamp turns on flashing to indicate that the valve, though still frozen, is in the process of thawing. The valve is now in operational mode 5.

The valve is now heating and when the temperature at either shoulder rises above 800°F, switch contacts TS-FV105-1A1 and 3A1 open, relay K673 deenergizes, contacts K673A and K673C close, contacts K673B and K673D open, the green lamp goes out and the valve can no longer be considered frozen, but the red lamp is still flashing which indicates that the valve has not yet reached the frozen condition. The valve is now in operational mode 6.

As the valve continues to heat up, the center temperature rises above 1000°F, switch contact TS-FV105-2A1 closes, relay K672 energizes, relay contacts K672C and K672E close, contact K672D opens, the red lamp is on steady, operational interlocks relay K682 is energized, and contact K682A closes to clear annunciator circuit 904. All of the conditions required for a thawed valve are satisfied, and the circuit is in operational mode 1.

Two important characteristics should be emphasized at this point. The first concerns the operational

interlock relays K681 and K682. The purpose of these relays not only in this circuit but also in all of the other circuits is to give a positive indication of the valve's condition (either thawed or frozen), and contacts on these relays are used as permissive interlocks in the master control circuits as described in Sect. 4.2. The second is the fail-safe configuration of the solenoid valve circuits. The operation of the contacts in these circuits is such that, if control circuit power fails or a solenoid coil burns out, the valve closes, and the cooling air supply is shut off, allowing the valve to thaw. This type of operation is highly desirable for the valves in groups I, II, and IV because safe conditions exist in the salt systems when they are open, but it creates a problem for the valves in group III.

Group III valves are not used very often, and when not in use they are allowed to go into a special operating mode known as "deep freeze" (see operational mode 4A, Table 4.3.2). Once a valve is frozen, it is put in the "deep freeze" condition simply by deenergizing the shoulder heaters and allowing the temperatures to level off at some value between 400 and 600°F. For safety reasons all group III valves must remain frozen under all circumstances. The problem arises when a control circuit power failure occurs and the cooling air system solenoid valves deenergize, shutting off the cooling air flow. Without cooling air, it is possible for the group III valves to thaw. Solenoid ECV-9002-5 is installed to prevent this by connecting the pneumatic operator of the cooling air supply valve to a third air pressure source as shown in Fig. 4.3.1*b*. For normal operations ESV-9002-5 is energized through circuit 700, Fig. 4.1.47. If a power failure occurs, ESV-9002-5 deenergizes so that air pressure is applied to hold all of the group III cooling air supply valves open.

### 4.3.3 Valve Condition, Master Control, and Safety Interlocks

The explanation of the freeze valve control circuit operating characteristics thus far is based on idealized conditions; that is, it assumes that operating temperatures are always the same, as shown in Table 4.3.1, that the shoulder temperatures never fall below a minimum value when the valve is frozen (this is important because the time required to thaw a valve is determined by the shoulder temperatures), and that the siphon pots are always thawed. In actual practice, operating temperatures as well as switch set points drift. This can cause spurious operations of the interlock relays. Also, shoulder temperatures may fall below the values required for acceptable thawing times, and freeze pots may not remain thawed. Such occurrences are prevented or at least minimized by the use of additional valve condition interlock circuits. These are:

1. Shoulder temperature limit – A674 and B674.
2. Shoulder temperature control – C674 and D674.
3. Siphon break temperature limits – A675 and B675.

The circuit numbers refer to FV105 in Figure 4.1.47, which is used as an example, but their operation is typical for other valves where they are used. All of the circuits listed impose restrictions on the operation of the cooling air control solenoids in circuit 677. Item 2 circuits also control the operational interlock relays in circuit 681. Still further restrictions are imposed on the operation of the cooling air solenoids by safety system interlocks and by the master control circuit interlocks. The latter operate on the valve circuits through the interlocks in the permissive-to-thaw relay circuit A676, which is described in the following paragraph.

For this explanation, circuit 677 has been rearranged and is shown in Fig. 4.3.2. The manual switch contact HS-909-A1 is closed, contacts KA675C and KB675C are closed, and contacts KA675D and KB675D are open. If the master control circuits have given permission to thaw FV105, relay KA676 is energized, contact KA676D is open, and contact KA676C is closed. Under these conditions the cooling air solenoids are energized through the series-connected contacts HS-909-A1, KA675C, KB675C, and KA676C. It should be apparent that if the siphon break temperature falls below 900°F or if permission to thaw the valve is not granted, then the above relay contacts will reverse their aspects, and one or more of the three parallel-connected contacts will close and bypass the manual switch contact HS-909A1. This keeps the cooling air solenoids energized and prevents the valve from being thawed by manual request. Thawing a valve with a frozen siphon pot is not desirable because the resulting expansion of salt trapped between the valve and the siphon pot could rupture the line. The occurrence of a low temperature condition in the siphon breaks also actuates circuit 904 to produce an audible and visual alarm. All of the valves are equipped with siphon break pots except FV103, and all except FV103, FV204, and FV206 have permissive-to-thaw interlock circuits. Thawing restrictions are not permitted on FV103 for safety reasons, and they are not needed on the latter two valves.

The circuits listed under items 1 and 2 above control the valve in the "freeze" mode. The basic operation is the same as described for modes 3 and 4, Table 4.3.2,

but the circuits are more complex because of the need to positively prevent freeze valve temperature drifts or switch set-point drifts from producing spurious and false operations of the "frozen" interlock relay (circuit 681). Such operations are intolerable because they deenergize the master control circuits to cause unnecessary shutdowns. When the valve is thawed, these temperature drifts are not a problem, because the valve temperatures are well above the switch set points, but when the valves in groups I, II, and IV are frozen, they must always be maintained ready to thaw. This requires that their temperatures be maintained at values close to the thaw point and this does not leave much room for drifts. Group IV valve temperatures do not have to be controlled so closely, and the type of circuit described in the section on basic operations is adequate. In the group IV valve circuits, the shoulder temperature limit relays (circuits A696 and B696, Fig. 4.1.48, are typical) are used only to activate an annunciator if the temperatures fall too low.

The main difference between the shoulder temperature control circuits in Fig. 4.1.47 and those previously described is a physical one, namely, the two shoulder temperature switches TS-FV105-1A1 and 3A1 have been moved from circuit K673 to individual relay circuits C674 and D674. Either one of these circuits will respond to shoulder temperature changes and operate relay K673, which, in turn, operates the indicator lamps and the "blast-hold" air solenoid. Additional contacts on these same two relays (KC674 and KD674) combine with center temperature switch contact TS-FV105-2A2 to form a two-of-three logic matrix in relay circuit 681. Relay K681, which energizes to denote a frozen valve, will remain continuously energized as long as the center temperature and one shoulder temperature are below the upper limit (550, 900, and 930°F respectively in this particular case) or both shoulder temperatures are below the upper limit. This contact arrangement, coupled with careful adjustment of the shoulder heaters, practically eliminates false interlock operations as a result of drifting temperature signals and switch actuation point.

At this point it should be noted that contacts on the operational interlock relays (circuits 681 and 682) are used in circuit 803 to actuate an annunciator. The purpose of this circuit and its operating characteristics have already been explained in Sect. 4.2.4.3.

Contacts on the shoulder temperature control relays and the shoulder temperature limit relays are also combined in circuit 677 to impose restrictions on the operation of the cooling air solenoids. As long as both shoulder temperatures remain above the lower limit, relays KA674 and KB674 remain energized, contacts KA674 and KB674B remain closed, solenoid valve HSV-909-A2 remains energized, and cooling air is applied to the freeze valve. Contacts KC674D and KD674D are shunted and have no effect on circuit 677. This makes it possible for circuits C674 and D674 to provide automatic on-off control for the "blast-hold" solenoid HCV-909-A3. If, however, either one of the shoulder temperature control relays (KC674 and KD674) is energized (temperature less than 850°F) at the same time that either one of the shoulder temperature limit relays is deenergized, then circuit 677 will open, and the cooling air supply solenoid will deenergize and shut off the flow of cooling air to the freeze valve. Freeze valves FV103, FV204, and FV206 have redundant cooling air supply solenoids, but the operation of contacts in their circuits is the same as for the others.

Contact KB18A in circuit 677 is a safety-grade interlock which opens to shut off cooling air if any emergency fuel drain is demanded. Circuits for freeze valves FV103, FV106, FV204, and FV206 are also energized through safety-grade interlocks. The actions of these contacts override the actions of all others to thaw the valves when an emergency drain is called for.

## REFERENCES


1. R. C. Robertson, *MSRE Design and Operations Report, Part I, Description of Reactor Design,* pp. 190–205.
2. Oak Ridge National Laboratory drawing D-HH-B-40543 – Freeze Valve Thermocouple Locations.
3. Oak Ridge National Laboratory Drawing D-HH-B-41697 – Flasher Panel Assemblies for Freeze Valve Position Indicators.
4. J. R. Tallackson, *MSRE Design and Operations Report, Part IIA, Nuclear and Process Instrumentation,* p. 52.


## 4.4 RADIATOR LOAD CONTROL SYSTEM

The load control system, including the circuits shown in Figs. 4.1.1, 4.1.13, 4.1.14, 4.1.20, 4.1.40, and 4.1.51, is thoroughly described in Sect. 2.8, but a few details about the design and operation of individual circuits are omitted there and are worth mentioning here.

One of these is the $\Delta P_{SP}$ drive motor in circuit 152. The differential pressure ($\Delta P$) across the radiator is the controlled variable in this system. The $\Delta P$ controller

set-point signal ($\Delta P_{SP}$) is supplied by an instrument air pressure regulating valve (Fig. 2.8.6). This valve is not operated manually but is driven by a small single-phase ac motor and gear reducer.[1] The motor rotates in a forward direction to increase the $\Delta P_{SP}$ pressure signal when relay K153 is energized and in the reverse direction to decrease $\Delta P_{SP}$ pressure when K151 is energized. Only one relay at a time can be energized, and two limit switches, ZS, coupled to the drive shaft prevent valve stem overtravel.

Another detail is the operation of the automatic start feature and the discharge dampers on main blowers MB1 and MB3 in circuits 155 through 160. Circuits 155 and 158 operate circuit breakers P and Q in the same way as described in Sect. 4.2.2 for the fuel-salt pump. Automatic load control is established when the operator energizes relay K150. If system conditions are not preventive, one of the main blowers is started manually, and then load demand switch S24 is manipulated to cause an automatically programmed increase or decrease in the load on the reactor system. Either blower, MB1 or MB3, may be started manually, and the other blower can then be set up by circuits 156 and 157 to start or stop automatically as required by the load programming system. When switch S29A is closed to start MB1, contact S29B opens to deenergize circuit 156, and contact S29C closes to energize circuit 157. Relay K157 remains energized through seal contact K157A after push-button switch S29 is released. With MB1 running, contacts K166C and KA150H in MB3 control circuit 158 are both open, and contact K166D is closed. The only way to energize relay KA158 to start MB3 is through contact K154C. Contact K154C will close when the automatic load program energizes relay K154. To reduce the load, the operator turns switch S24 to the "decrease" position, and the bypass damper opens. When the full open position is reached, contact K214D opens, and if switch S24 is still in the "decrease" position, all of the permissive-to-run contacts in the parallel group with S24E are open. Relay KB158 is deenergized and MB3 stops. When both blowers are on, the selection of the "automatic" blower may be changed by pushing the "on" button of the desired blower.

Circuits 159 and 160 energize solenoid valves which supply air to drive the pneumatic operators on the main blower discharge dampers. The pneumatic system, including the damper operators and position switches, is shown on drawing D-HH-Z-55529.[2] When both blowers are off, the solenoid valves are deenergized and the dampers are open. This is a fail-safe circuit arrangement to protect the blowers, which can be damaged if operated while the dampers are closed. The piston-type operators are supplied from the emergency air system. The 60-psig actuating pressure works against a 30-psig cushion. If the solenoid fails, this cushion of air will return the damper to the open position. For normal operation of the blowers, the solenoids are energized through auxiliary contacts on the power circuit breakers. These contacts are so arranged that when only one blower is running, the damper on the second blower is closed to prevent the loss of air flow through the blower opening. The damper on the second blower opens when that blower is started and the solenoid valve deenergizes.

Manual switches S128 and S129, located on main board 10, are used to close the dampers when the blowers are off. This is sometimes desirable for maintenance purposes when the reactor is shut down. When these switches are in position to close the dampers, additional contacts in circuits 155 and 158 open to prevent operation of the main blowers.

Circuits 166 and 167 provide additional contacts for use in other circuits where circuit breaker position interlocks are required.

### References

1. Oak Ridge National Laboratory drawing D-HH-B-57438, Motor Driven Regulator Package.
2. Oak Ridge National Laboratory drawing D-HH-Z-55529, Blower Damper Operators.

## 4.5 ROD CONTROL CIRCUITS

A complete description of the reactor control rods, rod drive components, and control circuits is presented in Chap. 2 of ORNL-TM-729, Part IIA,[1] pp. 177 to 272.

### References

1. J. R. Tallackson, *MSRE Design and Operations Report, Part IIA, Nuclear and Process Instrumentation,* ORNL-TM-729, Part IIA (February 1968).

## 4.6 FISSION CHAMBER DRIVES

The MSRE is equipped with two identical wide-range counting systems which measure the neutron flux near the reactor core vessel. The neutron sensors are fission chambers mounted on positioning devices as illustrated

by Fig. 2.3.1, Part IIA. A dc servomotor drives each device to move the chamber toward or away from the reactor vessel. The operator controls each motor individually by manipulating one of two switches, S13 and S14, mounted on the operator's console (MB13) in the main control room as shown in Fig. 4.7.2.1. A dial-type indicator and several lamps mounted on the main console panel just above each switch provide information about the positions of the chambers and the operating status of the positioning devices.

In each system all of the operator-initiated control functions are incorporated in a single switch; control mode selection requires a lateral push or pull motion on the operating handle, while manual directional commands require rotary motions. The two lateral positions correspond to the available control modes – manual and automatic. The automatic mode is established when the switch handle is pushed in, manual mode when pulled out. The handle also has three rotary positions – insert, auto-manual, and withdraw. It is spring-loaded to return to the center (auto-manual) position when released. A mechanical lock prevents rotary motions (manual directional commands) when the switch handle is pushed in (automatic mode).

The drive motors on the two positioners are controlled by identical circuits as shown in Fig. 4.1.17. The motor for fission chamber 1 is energized through the S13 switch contacts in circuits 189 and 190, and the one for chamber 2 is energized through the S14 switch contacts in circuits 191 and 192. The circuits are entirely separate from one another, and each is energized by an independent 32-V dc power supply. The indicator lamps on the console are energized through circuits 496 and 497, Fig. 4.1.39.

To illustrate the operation of both circuits, consider fission chamber drive 1. First, assume that switch S13 is in the center rotary position (auto-manual) and the handle is pushed in (automatic control mode is established). In this position, switch contacts S13A and S13B are closed and all other S13 contacts in the motor circuit are open. This contact configuration connects the servomotor directly to the output signal terminals of the servo amplifier. The servomotor operates automatically in response to the amplifier signals and maintains the fission chamber at the correct position. Switch contact S13G also closes in circuit 496 to energize the green (automatic) indicator lamp, XI-NCC1-A2, on the console. The design and operating characteristics of the servo amplifier and other components in the measuring system are described in Sect. 2.3, Part IIA.

Now, to illustrate further, assume that switch S13 is in the center rotary position (auto-manual) and the handle is pulled out (manual control is established). In this position, switch contacts S13A and S13B open to disconnect the motor from the servo amplifier, and contact S13C closes in circuit 496 to energize the red (manual) indicator lamp, XI-NCC1-A2, on the console. Contacts S13E and S13F also close at the same time, but the motor remains deenergized because contacts S13J, S13K, S13L, and S13M are all open. Rotating switch S13 to the "insert" position closes contacts S13J and S13M. The servomotor is energized by the flow of current from the positive bus through switch contacts S13J and S13E, relay contact K242A, motor armature M, relay contact K243A, and switch contacts S13F and S13M to the negative bus. The motor drives the positioner to move the fission chamber toward the reactor vessel. Contacts K242A and K243A remain closed as long as the positioner is within the prescribed limits of travel. In this case if the positioner moves beyond the insertion limit, switch ZS-NCC1-A2 opens circuit 243 (Fig. 4.1.19), relay K243 deenergizes, and contact K243A opens. The diode blocks the flow of current, and the motor stops. At the same time, contact K243C closes in circuit 496 (Fig. 4.1.39) and energizes green lamp ZI-NCC1-A2 on the console to call this condition to the operator's attention.

Rotating switch S13 to the "withdraw" position closes contacts S13L and S13K. The flow of current through armature M is reversed, and the motor drives the positioner to move the chamber away from the reactor vessel. Travel is limited by switch ZS-NCC1-A1, which opens to deenergize relay K242 and open contact K242A. Contact K242C also closes in circuit 496 to energize red indicator lamp ZI-NCC1-A1 on the console if the positioner drives beyond the withdrawal travel limit.

## 4.7 SAFETY CIRCUITS

The major components of the fuel- and coolant-salt systems, such as reactor vessel, pumps, heat exchanger, radiator, and interconnecting pipes, are not only expensive, difficult-to-replace items that are vital to the performance of the reactor experiment, but also form the primary containment barrier to the contents of the salt systems. The safety instrumentation and control systems function to prevent both the continuation of operations under conditions which could damage these components and the escape of hazardous materials to

surrounding areas if for any reason some malfunction occurs. A broad, overall description of these safety systems and the basic principles which guided their design is presented in Sect. 1.5.

In general, each safety system is composed of three major subsystems: measurements, electrical circuits, and final control elements. The measuring systems are assemblies of highly reliable, safety-grade components which continuously monitor reactor conditions. If any of these conditions exceed established limits, instrument switch contacts, operating in safety-grade circuits, actuate final control elements to either shut the reactor down or seal openings into the primary and secondary enclosures or both if required by existing conditions. The flow of information through these subsystems, from measuring elements to final control elements, is described by the input-output diagram of Fig. 1.5.2 and Table 1.5.1. The remainder of this section is a description of the safety-grade circuits that are controlled by inputs I through IX and operate to protect the integrity of the system by shutting the reactor down. The containment circuits which operate to block all openings into the reactor system are controlled by inputs X through XVII and will be discussed in Sect. 4.8.

### 4.7.1 Load Scram Circuits

The safety-grade circuits that shut the reactor down by dropping (scramming) the load, dropping the control rods, and draining the reactor vessel are shown in Figs. 4.1.1, 4.1.2, and 4.1.10. The load scram circuits, numbers 4 through 16, 124, and 125, are illustrated by Figs. 2.8.13 and 2.8.14, and their operation is thoroughly described in Sect. 2.8.6.

### 4.7.2 Fuel Drain Demand Circuits

The certain method for obtaining absolute shutdown and returning the system to the safest possible condition is to drain the contents of the reactor vessel into the drain tanks. An input-output diagram of the reactor drain instrumentation and control system is shown in Fig. 1.5.3. Circuits 1, 2, and 3 in Fig. 4.1.1 and circuits 18 through 27 in Fig. 4.1.2 are a vital part of this system. Logic diagrams for these circuits are shown in Figs. 4.1.65 and 4.1.68.

A drain is produced when either one or both of circuits 18 and 19 deenergize and open contacts in the circuits listed in Table 4.7.2.1. These operate control elements in the fill and drain system, which is described in Sects. 1.5.1 and 4.2.4. A drain is also produced if either one or both of circuits 20 and 21 deenergize but only during fill operations when special restrictions are in force. Once freeze valve FV103 is frozen, circuits 20 and 21 cannot produce a drain.

A fuel system emergency drain may be initiated manually or automatically. The operator can deenergize circuits 18 and 19 by turning manual switch S3, located on the main console as shown in Fig. 4.7.2.1, to the "drain" position. The conditions which automatically initiate a drain are: high reactor outlet temperature, high level in the fuel pump overflow tank, high radioactivity in the coolant pump off-gas or the reactor cell, and high pressure (>25 psig) in the fuel pump bowl. Other conditions which initiate a drain during a fill operation only are: high pressure (>2 psig) in the fuel pump bowl and control rod position below the fill level.

Three independent temperature measuring systems (see Fig. 2.5.4 and Sect. 2.5.1) operate switches TSS100A1-1, TSS100A2-1, and TSS100A3-3, which open to deenergize circuits 1, 2, and 3 if the reactor outlet temperature gets too high. Contacts on these relays are connected as shown in Fig. 4.7.2.2 to form a two-of-three coincident matrix in each of redundant circuits 18 and 19. The contacts will open and deenergize both circuits if any two of the three reactor outlet temperature switches open.

Input circuits 22-23, 24-25, and 26-27 are redundant pairs which deenergize if pump bowl pressure, reactor cell activity, and coolant off-gas activity measurements exceed the established limits. Contacts on relays K22, K24, and K26 are series connected in circuit 18 to form one of two independent input-output safety channels; those on relays K23, K25, and K27 are series connected in circuit 19 to form the other channel. The operation of any one of the two circuits in all three input pairs will deenergize either circuit 18 or circuit 19 and produce a fuel drain. They also shut off the fuel salt pumps (circuit 147 in Sect. 4.2.2) and close several containment block valves (Sects. 4.8.1 and 4.8.5).

Level switches LSS600B and LSS599B, operated by two independent measuring systems (see Sect. 3.2) and connected directly in circuits 18 and 19, initiate the corrective action if the fuel pump overflow tank is more than 20% full of salt.

Circuits 20 and 21 are interlocked with 18 and 19 so that all four must be energized to permit reactor filling operations. When these operations are in progress, safety considerations require that positive pressures in the fuel pump bowl be limited to +2 psig or less and that all three control rods be withdrawn to the fill position. If, at any time during a fill, the above requirements are not met, the pressure and position

Table 4.7.2.1. Fuel system drain demand safety circuits

| Circuit No. | Circuit No. 18, 19, 20, and 21 relay contacts | | Contact position | Final control element | Component served | Corrective action | Reference (section No.) |
|---|---|---|---|---|---|---|---|
| | Safety channel 1 | Safety channel 2 | | | | | |
| 20 | KA18A | | Open | Circuit 20 | | Corrective actions below for circuits 20 and 21 | |
| 21 | | KA19A | Open | Circuit 21 | | | |
| 117 | KB18F | KA19H | Open | HCV-573A1 | FD1 | Open drain tank vent valves | 4.2.4.2 |
| 118 | KA18H | KB19F | Open | HCV-575A1 | FD2 | | |
| 119 | KA18C | KA19C | Open | HCV-577A1 | FFT | | |
| A655 | KA18D | | Open | FV-103 | R | Thaw reactor drain valve | 4.2, 4.3 |
| B655 | | KA19D | Open | | | | |
| 677 | KB18A | | Open | FV-105 | FD1 | Thaw drain tank freeze valves | 4.2, 4 3 |
| 688 | | KB19A | Open | FV-106 | FD2 | | |
| 1084 | KA18G | KA19G | Open | Annunciator | Main control board | Annunciate fuel drain demand | |
| 115 | KB20A | KB21A | Open | HCV-530A1 | FST | Close drain tank helium supply valves | 4.2.9.1 |
| | KA20D | KA21C | Open | HCV-572A1 | FD1 | | |
| 116 | KA20E | KA21D | Open | HCV-574A1 | FD2 | | |
| | KA20F | KA21E | Open | HCV-576A1 | FFT | | |
| 127 | KA20C | KA21F | Open | PCV-517A1 | FD1, FD2, FFT | | |
| 131 | KA20G | KA21A | Open | HCV-544A1 | FD1 | Open drain tank bypass valves | 4.2.4.3 |
| 132 | KA20A | KA21G | Open | HCV-545A1 | FD2 | | |
| 133 | KA20H | KA21H | Open | HCV-546A1 | FFT | | |
| 320 | KB20C | KB21C | Open | ESV-609B | FSF | Close fuel transfer filter helium purge supply | |

switches shown in Fig. 4.7.2.2 open and deenergize circuits 20 and 21. The drain tank helium supply valves close, the bypass valves open, and since freeze valve FV103 is already thawed, the filling process is reversed and the reactor begins to drain. When conditions return to normal, the switches close automatically to stop the drain, and the fill operation may continue.

Circuits 22 and 23 energize automatically when the pressure switches close, but circuits 24, 25, 26, and 27 must be energized manually; for example, when switch RSS-565B1 opens, even momentarily, circuit 24 in Fig. 4.7.2.2 automatically deenergizes and will not energize again unless RSS-565B1 and push-button switch S96 are both closed. The circuit remains energized through seal contact K24F when the push bottom is released. The designs of all four radiation circuits are identical. The indicator lamps, push buttons, and the radiation switches are all located together on nuclear board NB4 in the auxiliary control room.

### 4.7.3 Nuclear Circuits

Although the nuclear safety system is discussed at length in Sect. 2.5, it interconnects with the process safety system at several points, and these deserve a brief explanation. Besides initiating a drain, the reactor outlet temperature circuits described in the previous section also scram the control rods by opening relay contacts K1A, K2A, and K3A in the three branches of circuit 28. This deenergizes three independent sets of relays mounted in ORNL model Q-2623 nuclear instrument chassis RX-NSC1-A6, RX-NSC2-A6, and RX-NSC3-A6. The contacts of relays in the chassis are interconnected to form three two-out-of-three coincidence matrices in circuit 29. One rod drive clutch is energized through each matrix as shown in Fig. 2.5.5 and will deenergize to drop the rods when any two of the three branches of circuit 28 are opened. Other instrument signals shown in Fig. 2.5.1 will deenergize circuit 28 and drop the control rods, but these are a part of the nuclear safety system described in Sect. 2.5.

Circuit 28, when deenergized, also initiates a load scram and a control rod reverse. Nuclear instrument switches RSS-NSC1-A4, RSS-NSC2-A4, and RSS-NSC3-A4 in circuit 124 (Fig. 4.1.10) and RSS-NSC1-A4, RSS-NSC2-A4, and RSS-NSC3-A4 in circuits 248, 249, and 250 (Fig. 4.1.19) are actually relay contacts in the three Q-2623 nuclear instrument chassis. Circuits 124 and 125, also shown in Fig. 2.5.6, are redundant safety channels with two-out-of-three coincident logic, which produce a load scram (see Sect. 2.8.6) when deenergized. Circuits 248, 249, and 250 are not safety grade but are redundant control channels with a two-out-of-three coincident logic contact arrangement in circuit 186 (Fig. 4.1.16). Circuit 186 produces a rod reverse when energized. In addition to initiating the rod reverse when deenergized, relays 248, 249, and 250 also close contacts in the three branches of circuit 498 to energize lamps XI-NSC1-A, XI-NSC2-A, and XI-NSC3-A (Fig. 4.1.39) and open contacts in circuit 1085 (Fig. 4.1.58) to sound an alarm in the main control room. The lamps in circuit 498 are located on the operator's console as shown in Fig. 4.7.2.1. The lamps energized through relay circuits 248, 249, and 250 also indicate a rod reverse but are mounted in the Q-2623 relay chassis on NB2.

The control rod clutch coils in circuit 29 also deenergize to drop the rods when switch S1 (Fig. 4.7.2.1) is turned to the scram position. K29 is a quick-opening relay used for rod drop tests only. When switch S1 is opened, K29 and the control rod clutch circuits are deenergized simultaneously. Contact K29A closes in circuit 196, Fig. 4.1.18, and engages the clutch to start the rod drop timer as the rods start to fall. The timer is shut off when the falling rods actuate the lower limit switches and deenergize relays K230, K231, K234, K235, K238, and K239 in Fig. 4.1.19.

The flux level scram trip point circuits in Fig. 4.1.30 are described in Fig. 2.5.2, Fig. 2.5.3, and Sect. 2.5.1.

## 4.8 CONTAINMENT

The MSRE containment system design criteria are discussed at length in Sect. 1.2.3.1. In general the containment requirements are met by providing two independent barriers, in series, between the interior of the primary system, which contains fuel salt, and the surrounding atmosphere. The fuel system pipe and vessel walls form the primary barrier. The fuel system is enclosed in the reactor and drain tank cells, which form the secondary containment barrier. A third barrier, controlled ventilation, is also provided for all areas that surround the secondary containment area (see Sect. 13, Part I). The instrumentation for the containment ventilation system is described in Sect. 3.11. Service pipes and instrument signal lines to and from the in-cell reactor system penetrate the first two barriers. The helium cover gas supply and discharge lines and the off-gas sampler lines pierce both primary and secondary barriers, while the instrument air supply, reactor cell evacuation, and cooling water lines pierce only the secondary barrier. The two-barrier containment concept is fulfilled for the former by providing: (1) two

independent controlled block valves, (2) one controlled block valve plus a restriction such as a charcoal bed, or (3) one controlled block valve plus two check valves. For the latter, the concept is fulfilled by providing one controlled block valve or one check valve in each line to supplement the primary fixed barrier. A simplified illustration of the containment systems with typical penetrations is shown in Fig. 1.1.6, Part IIA.

This section describes the electrical circuits which energize the controlled block valves in lines that penetrate containment barriers and the components in the containment ventilation system. The circuits connect the instrument systems, which measure reactor conditions, to the safety block valves as shown in Figs. 4.1.3, 4.1.4, 4.1.5, 4.1.6, 4.1.7, 4.1.31, and 4.1.34. The system of logic around which they are designed is diagrammed in Figs. 4.1.67, 4.1.68, and 4.1.69. The sequence of operations from instrument switch contacts through contact multiplication relays to the block valve solenoids is diagrammed in Figs. 4.8.1 and 4.8.2. On the latter two figures the valves are divided into two categories according to their blocking functions. The first category is composed of valves in lines that penetrate both primary and secondary containment enclosures. They are energized through input signal contact groups XIV, XV, XI, and VI as shown in Fig. 4.8.1. The second category is composed of valves in lines that penetrate the secondary containment enclosure only. These are energized through signal contact group XVI in Fig. 4.8.1 and groups XVII, IX, and XII in Fig. 4.8.2. Input signal contact groups X in Fig. 4.8.1 and XIII in Fig. 4.8.2 energize valves in both categories. The input signal groups listed here are the same as those shown in the input-output diagrams of Fig. 1.5.2 and Table 1.5.1.

Input signal groups XI, X, XVII, XII, and XIII consist of three independent and redundant circuits, and the switch in each circuit is operated by a measuring system that is independent of the other two. Groups XIV, XV, VI, XVI, and IX are composed of redundant pairs. If deenergized, groups XV, VI, X, XVII, XII, and XIII reset automatically when the signal systems close the switches. Groups XIV, XI, XVI, and IX must be reset manually by momentarily closing a push-button switch. Group XI, circuits 60, 61 and 62 in Fig. 4.1.5, is a good example of three independent circuits with the manual reset feature. Contacts on the relays in these three circuits form two-of-three matrices which are connected directly in block valve circuits 63, 64, 65, 66, 67, and 68. In this case, contact multiplication relay circuits are not used. Group XIII, circuits 30, 31 and 32, Fig. 4.8.3, is a good example of three independent circuits without the reset feature. Contacts on relays K30, K31, and K32 form two-of-three matrices in redundant relay circuits 36 and 37 which serve to multiply the number of contacts available for use in valve circuits. Circuits 22-23 and 24-25 in Fig. 4.7.2.2 of the previous section are examples of input groups composed of redundant circuit pairs.

Each input signal causes a specific group of valves to close so that containment is maintained when an out-of-limits condition exists in the reactor system. Although some of the block valves may be operated, under normal conditions, through control-grade interlocks or manual switch contacts, most of the circuits are energized continuously, and the valves remain open unless the safety circuits are actuated, in which case the circuits deenergize and the valves close. They cannot be energized again unless operating conditions in the system return to normal.

### 4.8.1 Helium Supply Block Valves

The lines shown in Fig. 1.5.6 connect the fuel- and coolant-salt system components to line 500, which is the helium cover gas main supply header. Each line has at least one and some have two controlled safety block valves. As illustrated by the diagrams in Fig. 4.8.1, the control circuits operate automatically to close the valves if (1) the pressure in line 500 drops below 28 psig (input signal group X), (2) the radioactivity in line 588 becomes excessive (input signal group XI), or (3) the fuel drain demand circuits, 20 and 21, deenergize (input signal group VI).

The operation of input group VI is not a containment blocking signal but a fuel drain demand signal, which is described in Sect. 4.7.2. It is shown here to clarify the operation of the circuits controlling the fuel drain tank supply valves which are used for both operational and safety blocking purposes.

A two-out-of-three configuration is formed in circuits 40 and 41 by circuits 46, 47, and 48. When the pressure in line 500 falls below 28 psig, circuits 40 and 41 are deenergized by the operation of any two of the three pressure switches in circuits 46, 47, and 48. Contacts on relays K40 and K41 form one-out-of-two contact matrices which open to deenergize the following valve circuits:

1. Circuits 63, 64, 65, 66, 67, and 68 (see Fig. 4.1.5) close the block valves in the lines supplying helium to the fuel pump and overflow tank bubbler level elements.

2. Circuits 115, 116, and 127 (see Fig. 4.2.4.2) close valves in the fuel drain tank helium supply lines. Since PCV-517A1 combines in the fuel system supply with HCV-572A1, HCV-574A1, and HCV-576A1 to form redundant pairs, the safety interlock contacts and wiring in matrix VI of circuit 127 and those in the same matrix of circuits 115 and 116 are installed in separate conduits.
3. Circuits 42, 43, and 129 (Figs. 4.1.4 and 4.1.9) close redundant valves ESV-516A1, ESV-516A2, and FCV-516B1 in the fuel pump helium purge supply line 516. Only two of the three valves shown in line 516 are needed to meet containment requirements. The third valve is the result of a last-minute piping design change and was not removed.
4. Circuit 83 (Fig. 4.1.6) closes redundant valves ESV-519A and ESV-519B in line 519, which carries helium purge gas to the reactor vessel drain line 103 and to the fuel drain tank helium supply lines 572, 574, and 576.
5. Circuits 126 and 128 (see Fig. 4.1.9) close valves HCV-511A1 in the coolant drain tank helium supply line 511 and FCV-512A1 in the coolant pump purge supply line. Only one controlled block valve is used in line 512 because the heat exchanger tube wall between the fuel- and coolant-salt systems is the first safety barrier.
6. Circuits 44 and 45 (Fig. 4.1.4) close valves PCV-513A1 and PCV-510A1 to block the lines supplying helium cover gas to the fuel and coolant system lube oil tanks. These valves are a part of the pressure control system shown in Fig. 1.5.9.
7. Circuits 75, 76, and 77 (see Fig. 4.1.6) close valves in the lines supplying helium to the coolant salt pump bubbler level elements. The manual switch contacts and the equalizing valves in these circuits as well as those in item 1 above are not parts of the safety-grade system but are used during normal operations for testing purposes. Their functions are described in Sect. 4.9.8.

The circuits in items 1 through 4 control valves in lines that penetrate both primary and secondary containment barriers. Those in items 5 through 7 control valves in lines that penetrate the secondary barrier only. The fuel pump lube oil system helium supply valve PCV-513A1 in item 6 has a secondary containment status because the fuel pump shaft seal is considered to be the first or primary containment barrier. The vent valve PCV-513A2, which is discussed in the following section, is also considered to be a secondary barrier for the same reason.

Relay contacts K46F, K47F, and K48F open in annunciator circuit 964 (Fig. 4.1.54) to activate an alarm in the auxiliary control room which warns the operator that the helium supply system block valves are closed. Pressure switches PS-500B1 and B2 on line 500 also provide low- and high-pressure alarms by opening annunciator circuits 966 and 967 to warn the operator that the block valves are about to close.

Line 588 is a vent for the drain tank pressure transmitters' zero reference pressure system (see Sect. 6.2). When input signal group XI indicates that an excessive level of radioactivity exists in line 588, switches RSS-596A, B, and C open to deenergize relays K60, K61, and K62 and initiate blocking actions in the helium lines supplying the level elements (bubblers) and pressure measuring instruments connected to the fuel pump bowl, the overflow tank, and the fuel drain tanks. Contacts on the relays are connected to form two-out-of-three coincident matrices in those circuits listed in items 1 and 2 above. If any two relays deenergize, the contact matrices open and the block valves close.

### 4.8.2 Off-Gas System Block Valves

Line 557, Fig. 1.5.8, carries helium off-gas from the main and auxiliary charcoal beds, the coolant-salt pump, the coolant-salt drain tanks, and the lube-oil systems to the containment air stack, where it is discharged into the atmosphere. The radioactivity of the gas in the line is monitored by elements RM-557A and B. It is evident from Figs. 4.8.1 and 4.1.6 that an excess radioactivity signal from either element (input signal group XVI) deenergizes circuits 70, 71, 72, 73, and 74 to close block valves HCV-557C1, PCV-513A2, and PCV-510A2. All three valves are secondary containment barriers only. High radioactivity causes switches RSS-557A1 and B1 to open and deenergize redundant relays K70 and K71. The relay contacts are connected in a one-out-of-two configuration in the valve circuits and open to deenergize all three valves if either one of the relays operates.

The off-gas sampler is located in the vent house and is connected to line 522 upstream from the charcoal beds as shown in Figs. 1.5.8 and 1.5.10. Since the sample lines are extensions of the primary containment barrier, two safety-grade block valves (see Sect. 6.20) are connected in series to form redundant pairs in both the supply and return lines. Each valve in a series pair is energized by separate branches of circuit 319, Fig. 4.1.34. If either branch deenergizes, two valves close to

block both supply and return lines. Indicator lamps I-319A and I-319B on OGS control panel 1 are lit when voltage is applied to energize the valve solenoids.

Each branch of circuit 319 is controlled by a separate relay in the OGS block demand circuit 318. Neither circuit can be energized until the operator in the main control room gives permission by closing manual switch S161A. If S161A is closed and push-button switch S162A is closed momentarily, relay KA318 will energize and remain energized as long as the following conditions prevail:

1. Fuel pump pressure is less than 10 psig (input signal group XV) – safety relay contact KA379F is closed.
2. Reactor cell pressure is less than 2 psig (input signal group XIII) – safety relay contact K36G is closed.
3. Radioactivity in OGS secondary containment enclosure is not excessive (input signal group XIV) – safety switch RS-54A2 is closed.

When the push-button switch is released, energizing current continues to flow to the relay through seal contact KA318C. As long as relay KA318 is energized, contact KA318A is closed and manual switch S164B may be used to open and close valves ESV-537A and ESV-538A as required to operate the sampler. Relay KB318 and manual switch S165B operate in identical circuits to control the other two valves, ESV-537B and ESV-538A.

### 4.8.3 Secondary Containment Penetration Block Valves

The valves described in this section are shown in Fig. 4.8.2. They are installed in lines which penetrate the secondary containment enclosure only.

**4.8.3.1 Instrument air lines.** The block valves in these lines have pneumatic operators, all connected to a common header, which is supplied through the solenoid valve matrix as shown in Fig. 1.5.1. Under normal operating conditions, the three-way solenoid valves are energized so that the air supply line is open and air pressure is maintained in the header and the operators to hold the block valves open. If the atmospheric pressure in the secondary containment enclosure exceeds +2 psig, the solenoid valves automatically deenergize to positions which close the air supply line and vent the block valve operators to the atmosphere. Without air pressure in the operators, the spring-loaded valves close and block the instrument air lines.

The blocking action is initiated by safety system input group XIII, which operates circuits 30, 31, 32, 33, 34, and 35 as illustrated in Fig. 4.8.2. The circuits are shown in Fig. 4.8.3. Pressures greater than +2 psig open independent switches PSS-RC-B, -F, and -G to deenergize the relays in circuits 30, 31, and 32. Each switch deenergizes one relay, which, in turn, deenergizes one of the three pairs of solenoid valves in circuits 33, 34, and 35. Each relay and solenoid valve circuit combination is separate and independent of the other two. The instrument air line block valves close when any two of the three solenoid valve circuits deenergize. The two-out-of-three coincident logic is provided by the piping arrangement of the solenoid valve matrix (see Sect. 1.5.1).

**4.8.3.2 Waste system.** Input signal group XIII, Fig. 4.8.2, also controls the block valves in the liquid waste system. Liquid waste from the reactor and drain tank cell pumps is pumped to the liquid waste tank through lines 333 and 334 (see Fig. 1.5.13). Two series-connected valves close to block each line if the reactor cell pressure exceeds +2 psig. When the pressure exceeds +2 psig, relays K30, K31, and K32 deenergize. The relay contacts, connected to form two-out-of-three coincident matrices, open to deenergize redundant relay circuits 36 and 37. Contacts operated by relays K36 and K37 open to deenergize and close the waste system valves shown in circuits 38 and 39, Fig. 4.8.3. An examination of the circuit diagram shows that one valve in each line is energized through the K36 relay contacts and the other valves are energized through the K37 relay contacts. The two valves in each line are redundant, and they are controlled by separate and independent circuits.

Manual switches HS-333 and HS-343, mounted on TB9 in the transmitter room (TR), are used for routine transfer and testing operations. The switch contact development in Fig. 4.1.3 shows the position of each valve for each position on the switch.

Contacts on relays K36 and K37 also control block valves serving the off-gas sampler, the fuel drain tank steam domes, the vapor condensing system, and the reactor cell oxygen analyzer. The off-gas sampler valves are discussed in Sect. 4.8.2. Valves serving the other systems are discussed in the following sections.

**4.8.3.3 Vapor condensing tank.** The vapor condensing system (Sect. 17.3, Part 1) is a secondary containment enclosure, but it is isolated from the reactor and drain tank cells by rupture disks as shown in Fig. 1.5.8. The vapor condensing tank, VT1, is a vertical tank about two-thirds full of water, through which gases forced from the reactor cell in a major accident would be bubbled to condense the steam and prevent the pressure from rising above 40 psig (see the Analysis of Hazards, Part V).

A bubbler level element, which requires a nitrogen gas supply, is used periodically to check the water level in the tank. The nitrogen is supplied to the bubbler dip tube through safety block valve ESV-VT1-F. This valve is always energized and remains open unless safety relay contacts K36H or K37H open to deenergize circuit 49, Fig. 4.1.4.

**4.8.3.4 Reactor cell evacuation.** During nuclear operations the pressure in the reactor cell is reduced to -2 psig (12.7 psia) and held constant at that value by automatic control (Sect. 3.6). If the pressure falls below 12.2 psia, pressure switch PS-RC-A2 (see circuit 98 in Fig. 4.1.8) operates to open control-grade contact K98A in circuit 80, which deenergizes and closes cell evacuation valve HCV-565-A1 to prevent further evacuation of cell air (see Fig. 1.5.8). At the same time, contact K98C opens circuit 811, Fig. 4.1.52, to produce an alarm in the main control room.

If pressure reduction continues until the reactor cell pressure falls below 10.7 psia, safety input signal group XII, Fig. 4.8.2, produces two protective actions: (1) closes HCV-565-A1, if not already closed, and (2) shuts off both component coolant pumps. This action is initiated when pressure switches PSS-RC-H, -J, and -K in Fig. 4.1.7 open and deenergize relays KA84, KB84, and KC84. These are identical to the circuits 30, 31, and 32 previously described. Two-out-of-three contact matrices operate in circuit 80 to deenergize evacuation valve HCV-565-A1 and in circuit 85 to shut off the component coolant pumps (see Fig. 4.9.4.1). A single contact on each relay also opens circuit 811 to produce an alarm in the main control room. The indicator lamps shown in circuit 84 are mounted on the reactor gage panel (RGP) in the north electric service area (NESA). Each lamp is lit when its corresponding relay is energized. They are useful when routine maintenance and testing operations are performed on the reactor cell pressure safety system.

HCV-565-A1, along with HCV-915-A1, is also actuated by radioactivity in the reactor and drain tank cell atmospheres (safety system input group IX). Contacts K24C and K25C form a one-out-of-two matrix which opens to deenergize circuit 80 if the radioactivity in the reactor cell atmosphere becomes excessive. When operating conditions are normal and all safety interlocks are closed, manual switch HS-565-A1 may be used to open and close the cell evacuation valve at the operator's convenience. An identical matrix is formed by contacts K24E and K25E in circuit 82. If either of these contacts opens, the circuit deenergizes and closes block valve HCV-915-A1, which supplies component cooling air to the rod drives and control rod thimbles.

**4.8.3.5 Steam dome drain lines.** Line 806-2 in Fig. 1.5.7 is used to keep both drain tank steam domes dry during normal operations. The line penetrates the secondary containment barrier and has two block valves connected in series. Valves ESV-806-2A and 806-2B, a redundant pair, are energized for normal operations through the one-out-of-two safety contact matrices in circuit 81 (Fig. 4.8.3). The contacts open and the valves close if high reactor cell pressure (input group XIII) or excessive radioactivity (input group IX) is indicated in the reactor cell evacuation line. The sequence of events is illustrated in Fig. 4.8.2. Manual switches are provided on junction box JB153 in the north electric service area for use during routine operations. This is a comparatively remote area, but these valves are used infrequently, and the operator has ample time to reach the switches whenever the steam domes are filled.

**4.8.3.6 Reactor cell oxygen analyzer.** The oxygen analyzer is connected to the reactor cell atmosphere through evacuation line 565 in the vent house. The safety block valves in the sample supply and return lines and their control circuits are shown in Figs. 1.5.12 and 4.1.31. Two series-connected valves provide redundant blocking actions in each line. It is apparent from circuit 298 that one valve in each line is controlled by safety relays K24 and K36, while the other two valves, one in each line, are controlled by relays K25 and K37. If input signal IX indicates excess radioactivity in cell evacuation line 565 (contacts K24G and K25G open) or if input signal XIII indicates that reactor cell pressure is greater than +2 psig (contacts K36D and K37D open), circuit 298 is deenergized and the valves close. This sequence of operations is illustrated in Fig. 4.8.2. The manual switches and valve position indicator lamps, located in junction boxes on the vent house wall near the analyzer, facilitate routine maintenance and operations, but the circuits are designed so that these components do not compromise the reliability of the safety-grade interlocks.

Since this system penetrates the secondary containment only, a single valve in each line would have met the requirements of the two-barrier containment concept, but special considerations make a second valve desirable. In this case the pressure rating of the analyzer is less than the 50 psig minimum required for secondary containment enclosures.

**4.8.3.7 Cooling water lines.** Treated cooling water lines to and from the drain tank and reactor cell space coolers, thermal shield, and fuel pump motor penetrate the secondary containment barrier. Check valves provide blocking action in all inlet lines except 844. Controlled safety block valves are installed in line 844

and in the return lines as shown in Fig. 1.5.14. The valves open when circuits 53 through 58 in Fig. 4.1.4 are energized. The operation of the safety interlocks in these circuits is diagrammed in Fig. 4.8.2. If the level of radiation in line 827 is excessive, three independent switches (input group XVII) open to deenergize circuits 50, 51, and 52. Contacts on relays K50, K51, and K52 form a two-out-of-three matrix in each of the valve circuits. Each matrix will open and deenergize the valve if any two of the three relays are deenergized. Surge tank (ST) purge valves ESV-ST-A1 and -A2 serve as a backup to FSV-837-A1, FSV-841-A1, FSV-846-A1, and FSV-847-A1 and provide redundant blocking in the system. The wiring for circuit 57, therefore, is physically separated from the wiring for the other cooling water block valve circuits.

The reactor thermal shield is protected from excessive pressures by the self-actuated pressure control valve PCV-844C and the rupture disk in supply line 844. To avoid unnecessary disk ruptures resulting from pressure surges, control-grade interlock contact K106A in circuit 58 prevents supply valve FSV-844A1 from opening or remaining open unless valve FSV-847A1 in the return line is wide open. Contact K106A opens to deenergize circuit 58 when relay K106, Fig. 4.1.8, is deenergized. Circuit 106 is completed through switches PSS-844B1, PSS-855A1, and ZS-847A2. PSS-844B1 remains closed as long as pressure in the inlet line is below 13 psig. ZS-847A2, operated by valve stem position, is closed only if valve FSV-847-A1 is 100% open. PSS-855-A1 remains closed unless the pressure in the line downstream from the rupture disk exceeds 5 psig. This line is normally empty and is not under pressure unless the disk is ruptured. Circuit 106 deenergizes automatically if any one of the three pressure switches opens, but it will not energize again until all three switches are closed and manual reset switch S119 is closed momentarily. Under normal circumstances each of the valves, except ESV-ST-A in circuit 57, may be opened or closed by operating a hand switch mounted on the water panel.

### 4.8.4 Containment Air System

The third containment barrier is the containment air system, described in Sect. 3.11. This system provides controlled ventilation for all areas that surround the secondary containment barrier. Two centrifugal fans, SF1 and SF2, are used to induce air flow through these areas as shown in Figs. 3.11.1 and 3.11.2. Both the direction and the volume of flow are determined by the positions of two 30-in.-diam butterfly valves, HCV-930A and HCV-930B, and the louvered damper HCV-935A. The two valves and the damper are positioned by three identical operators. Each operator is a Limitorque[1] speed reduction gear driven by a $^2/_3$-hp 440-V, three-phase induction-type electric motor. Damper HCV-934A1 in the radiator exhaust duct 934 is positioned by a spring-loaded diaphragm-type pneumatic operator. Air pressure is applied to the operator through the three-way solenoid valve HCV-934A2. The damper is either opened or closed by energizing or deenergizing the solenoid.

All of the above components except the fans and the radiator exhaust damper may be operated from two locations. One control station is mounted locally near the equipment, and the other is mounted on MB3[2] in the main control room. The fans and the radiator exhaust damper are operated from MB3 only. Each motor control station consists of two push-button switches and two indicator lamps.

**4.8.4.1 Stack fans.** Although the stack fans are not safety-grade components, it is important to maintain a continuous flow of air through the contained areas, particularly while the reactor is in operation (see Part V, Sect. 6.1, Reactor Safety Analysis). Two fans are provided to increase the reliability of the system. Either one of the two has sufficient capacity to exhaust all of the enclosures, but normally SF1 is the operating fan and SF2 is placed in a standby condition. If for any reason the flow stops or is significantly reduced, pressure switches PS-927A1 and A2 (see Fig. 3.11.2) operate automatically to start the standby fan SF2 and stop fan SF1. Although the operator may choose to run either fan, the automatic switching feature is available only when SF1 is the operating fan and the SF2 control circuit is placed in the automatic start mode.

The fan motors are connected to separate TVA power distribution buses through two NEMA size 3 full-voltage magnetic motor-starting contactors.[3] The contactors are located in the switch-gear room. The operating coils and auxiliary contacts are connected to terminals in junction box JB26 (see Sect. 4.9.7) by a 12-conductor control cable. Individual wires extend from JB26 to the control stations.

The two fan motors are controlled by circuits 522 through 527 in Fig. 4.1.42. Operational logic diagrams for the same circuits are shown in Fig. 4.1.68. Each group of circuits receives 120-V control power from a small step-down transformer connected to the line side of the motor starter. The contact positions shown in Fig. 4.1.42 indicate that both fans are off. When the control power buses are energized, the circuits remain unchanged, but the green lamps in circuits 524 and 527 light up on MB3 to indicate that both motors are off

and the control power is on. The operator now has the option of starting either fan by pressing the appropriate push button – but if he chooses SF2, he must remember that SF1 will not start automatically on a loss of fan suction pressure. Electrical cross interlocks K526C and K523C prevent the simultaneous operation of both fans.

Both fans are controlled by conventional motor starting circuits, but the two circuits have different arrangements. The SF1 circuits, 522 and 523, are designed to provide what is commonly called low-voltage protection. The SF2 circuit, 526, is designed to provide low-voltage release.

Low-voltage protection is the term applied to a circuit arrangement that will disconnect a motor from the source of power if the voltage fails and requires that an attendant operate the starting or control device to restart the motor. This arrangement is used for motor applications where unexpected starting cannot be permitted.

Contacts S68 and S69 in SF1 control circuit 522 represent a two-button start-stop control station. The push-button contacts are spring return and make or break their contacts only momentarily while depressed. Pushing the "start" button energizes relay coil K522; time delay contact K522A closes instantly and energizes contactor coil CC523; the contactor closes, and the drive motor on fan SF1 starts. Relay K523 is used to provide additional auxiliary contacts for CC523. Therefore, when CC523 energizes, relay K523 also energizes and hold-in contact K523D closes to maintain the flow of current in circuit 522 after the "start" button is released; contact K523A opens, contact K523B closes, the green lamp goes out, and the red lamp lights up to indicate that SF1 is running.

The addition of the time delay relay between the push buttons and the contactor coil CC523 makes the circuit appear unconventional, but it does not alter the basic operating characteristics. Although the circuits are designed to deenergize and remain deenergized when a low-voltage condition develops, the slight delay in the opening operation of contact K522A maintains the continuity of the control circuits to keep the motor running without further attention when momentary power outages or voltage dips occur on the TVA power line. If a sustained power failure occurs or the overload relay contacts break the circuit, contact K522A opens, contactor coil CC523 and relay K523 deenergize, and hold-in contact K523D opens. The motor stops and will not restart until the "start" button is again depressed. The overload relay must also be reset manually before the motor can be restarted.

When SF1 is running, contacts CC523E and CC526E in circuit 525 are closed, and three-way solenoid valves FCV-925A and FCV925B are both energized. Air is applied to both fan discharge dampers, FCO-925A and FCO-925B; the SF1 damper is open, and the SF2 damper is closed. When SF2 is the operating fan, both solenoids deenergize and vent both damper operators; FCO-926A, the SF2 discharge damper, opens, and FCO-925A, the SF1 discharge damper, closes to prevent backflow through fan SF1.

Low-voltage release is the term applied to a circuit arrangement that stops a motor if the voltage fails, but will permit the motor to restart automatically, with no attention from an attendant, when normal voltage returns. This arrangement is often used in applications where continuous operations are important and automatic startup interlocks are required.

S70 in SF2 control circuit 526 represents a two-button start-stop push-button station with maintained contacts. If the "start" button is closed, its contacts remain closed until opened by pressing the "stop" button. A time delay relay is not needed with this type of push-button circuit. If voltage dips occur, the circuit is maintained, and the contactor coil remains energized unless the loss of voltage is sustained. The motor will restart automatically when the voltage is reapplied. Relay K526 is used to provide additional auxiliary contacts which operate simultaneously with coil CC526.

The parallel-connected contacts K254A and K523C just below the push button in circuit 526 are the SF2 automatic start interlocks. Contact K523C opens when fan SF1 starts. If SF1 induces normal suction pressure in the system, pressure switches PS-927A1 and -A2 close to energize relay K254, Fig. 4.1.19. This opens contact K254A in circuit 526. After starting SF1, the operator closes the SF2 "start" button S70. SF2 does not start because the two parallel interlocks are open, but the white lamp I-526 lights up on MB3 to signify that the SF1 control circuit is in a standby condition. If the SF1 suction pressure rises above 1 in. $H_2O$ negative, contact K254A will close and energize the SF2 contactor coil CC526. This will start fan SF2 and open contact K526C in circuit 523 to stop fan SF1. In this application it is more important to maintain continuous operations than to protect the motor; therefore, no overload relay contacts are included in circuit 526.

**4.8.4.2 Reactor cell exhaust duct valves.** The two butterfly valves HCV-930A and B in the reactor cell exhaust duct 930 (Fig. 3.11.1) have electric-motor-driven operators. The motors are connected to TVA power system bus G-3[3] through two three-phase full-

voltage reversing starters. Each starter employs two magnetic contactors which are mechanically and electrically interlocked so that both cannot be closed at the same time. One contactor closes to run the motor in the direction which opens the valve. When the other contactor closes, two of the motor connections to the power line are reversed, and the motor runs in the opposite direction to close the valve.

The operating coils for the two contactors in each starter are controlled by circuits 565 and 566, Fig. 4.1.44. Operational logic diagrams are shown in Fig. 4.1.68. The operation of circuit 565, which controls valve HCV-930A, is typical, since the two circuits are identical.

When coil CCB565 is energized, the operator motor runs in the direction which opens the valve. When coil CCA565 is energized, the valve moves to the closed position. Contacts CCA565D and CCB565D are the electrical cross interlocks which prevent the coils from being energized simultaneously. Each control station consists of two push buttons marked "open" and "close." The push-button contacts are spring return to the open position. Operation of the "open" or "close" button will energize the proper coil and close the contactor to run the motor in the desired direction. The motor will continue to run until the operator releases the push button and deenergizes the contactor coil. The coil will deenergize automatically and stop the motor if one of the overload relay contacts opens or one of the contacts on the two operational limit switches, XSS-930A and ZS-930A, opens. The limit switches are operated by the Limitorque[1] drive unit. ZS-930A is a gear-driven rotary drum switch which governs the valve disk travel and energizes the valve position indicator lamps (see circuits 480 and 481, Fig. 4.1.38) for both the opening and closing directions of travel. XSS-930A is a torque-actuated switch which also governs valve disk travel in both directions. It operates to prevent torque overload damage by limiting the amount of thrust that can be exerted on the valve disk when seating or when moving against some obstruction in the pipeline.

**4.8.4.3 High-bay exhaust damper.** The drive motor on the high-bay exhaust damper (HCV-935A, Fig. 3.11.1) is controlled by circuit 567, Fig. 4.1.44. This circuit is identical to circuit 565, which is described in Sect. 4.8.4.2. The valve position indicator lamps are energized by circuit 482, Fig. 4.1.38.

**4.8.4.4 Radiator enclosure exhaust damper.** Damper FCO-934A in radiator exhaust duct 934 operates in one of two possible positions: fully open or closed. The position is selected by operating manual switch HS-934A in circuit 528, Fig. 4.1.42. When the switch is closed, the three-way solenoid valve FCV-934A is energized. Air pressure is applied to the pneumatic operator, and the damper opens. The manual switch HS-934A and the solenoid valve FCV-934A are both mounted in containment air panel CAP-1.[4] This is a weatherproof panel that is located immediately to the south of Building 7503.

### References


1. See sect. 3.11.5, refs. 2 and 20.
2. Oak Ridge National Laboratory drawings:
   - D-HH-B-40558, Main Control Board Detail Layout, Panel 3
   - D-HH-B-41585, Main Control Board – Panel 3 – Wiring Diagram
   - D-HH-B-41622, Main Control Board – Panel 3 Pneumatic Diagram
3. Oak Ridge National Laboratory drawing:
   - D-KK-C-41152, Process Equipment, Electrical Distribution System.
4. Oak Ridge National Laboratory drawings
   - D-HH-Z-40621, Containment Air Panel 1 – Layout and Assembly
   - D-HH-Z-55558, Containment Air Panel 1 – Wiring Diagram
   - D-HH-Z-40624, Containment Air Panel 1 – Pneumatic Diagram


## 4.9 AUXILIARY PROCESS CONTROL

As previously stated, the MSRE and its instrumentation and control systems may be viewed as a primary reactor system plus the collection of auxiliary systems required to run the primary system. The discussions in previous sections have been concerned mainly with control circuits for those elements which exert a direct and immediate influence on the status of operating conditions in the reactor primary systems. The following paragraphs describe control circuits for auxiliary systems which provide services that are essential to the operation of the primary system.

There is a strong incentive to maintain continuous operation at the MSRE; therefore, the auxiliary systems are designed to minimize undesirable and unnecessary shutdowns caused by equipment failures and electrical

power interruptions. Redundant components are provided in each system. A loss of service from one unit is annunciated, and immediate transfer of the operating load to the spare unit is accomplished by the operator in the main control room. In some auxiliary systems, such as instrument air compressors and lube oil pumps, the transfer operation occurs automatically. Loss of service due to power interruptions is avoided by connecting redundant units and their control circuits to separate TVA power distribution buses which in emergencies may be supplied from diesel generators or a battery-powered system. Shutdowns caused by spurious voltage transients on the control circuit power supplies are avoided by incorporating a time delay in the operation of seal-in contacts used with momentary push buttons.

The operation of the control circuits for each auxiliary system is described in the following paragraphs.

### 4.9.1 Containment Vessel Pressure Control

The pressure in the reactor and drain tank containment vessels is controlled by circuits 80, 84, 85, and 98 (see Fig. 4.1.6, 4.1.7, and 4.1.8). These circuits are discussed in Sect. 4.8.3.4.

### 4.9.2 Instrument Air Compressors

Pneumatic instruments are vital components in the reactor safety and control systems, and a dependable supply of clean, dry air is essential for reliable and continuous operations. This supply is provided by the instrument air system.[1] Two vertical water-cooled reciprocating-type air compressors, each capable of delivering 100 scfm of air at a pressure of 80 psig, are at the heart of the system. Figure 4.9.1 is a simplified diagram of the compressors and their control elements.

Each compressor, driven by a 40-hp 480-V, three-phase induction-type electric motor, is capable of supplying 100% of the plant's requirements. The motors are connected to separate power distribution buses[2] through two NEMA size 3 full-voltage magnetic motor-starting contactors as shown in Fig. 4.9.2. The starters and control interlock relays are mounted on the south wall of the diesel house near the compressors.[3]

The operator's controls are mounted on main board MB12.[4] These consist of two sets of push-button switches for starting and stopping the motors, two sets of on-off indicating lamps, and one operational mode selector switch S53. The mode of operation, either manual or semiautomatic, is determined by placing the selector switch in one of three positions: "compressor 1," "manual," and "compressor No. 2." Semiautomatic operation is achieved by selecting a compressor, either No. 1 or No. 2, to be the operating machine. The selected machine is started manually by closing the appropriate push-button switches and runs continuously to maintain the pressure in main supply line 9000 at some value between 75 and 85 psig. If this pressure falls below 70 psig, the standby machine will start automatically. With switch S53 in the "manual" position, the automatic startup feature is inactive, and neither compressor will start unless the "start" push button is closed. Regardless of selector switch position, the push buttons may be used to operate the compressors individually or simultaneously. Once started, a compressor will continue to run until the operator opens the "stop" push button or it is shut down automatically by the protective interlocks.

The two compressor motor starters are controlled by identical circuits as shown in Fig. 4.9.2. Both operating coils, CC501 and CC504, are energized by conventional motor starting circuits 501 and 504. The arrangement of the momentary-contact-type push-button switches and the seal-in interlocks is typical of this type of circuit. Relay contacts, operated by pressure-actuated switches in circuits 300 and 301, combine in both circuits with contacts on selector switch S53 to provide the automatic startup feature for the standby compressor. Operating restrictions are imposed on circuit 501 by the permissive-to-run interlock circuit 302; an identical circuit, 307, imposes the same restrictions on circuit 504.

The operation of the circuits controlling air compressor 1 is typical of both machines. With the circuits as shown in Fig. 4.9.2, the operational status of the system is as follows: the pressure in main supply line 9000 is zero, all relay and contactor coils are deenergized, and both compressors are off. When the control power buses are energized, the circuits remain unchanged, but the green lamps in circuits 502 and 505 light up in the main control room to indicate that both compressor motors are off and that both motor starter circuits are ready.

The compressors will not start unless the operator first energizes permissive interlock circuits 302 and 307. If the temperatures of the compressed air and the cooling water leaving the head of compressor 1 are not too high, the temperature switch contacts TS-AC1-A and B in circuit 302 will be closed. When the momentary-contact-type push button S56 (located in the diesel house) is closed, relay coil K302 is energized by the flow of current through the temperature switches, the push-button switch, and the normally

closed relay contact KA501A. At the same time, contact K302A, connected in parallel with S56, closes. When the operator releases the momentary-contact-type push-button switch S56, relay K302 remains energized through the seal-in contact K302A instead of through switch S56. Compressor 2 permissive circuit 307 operates the same way when reset push button S59 is closed momentarily.

When circuits 302 and 307 energize, relay contacts K302B and K307B close to remove the operating restrictions from motor starter circuits 501 and 504. Neither compressor is running at this point, and the operator has the option of placing the operational mode selector switch S53 in the "manual" position or selecting one of the two compressors as the operating unit. The operation of circuit 501 is the same regardless of the selector switch position, but for this illustration the switch is placed in the "compressor 1" position. This closes contacts S53C in circuit 301 and S53E in circuit 504 to activate the automatic startup feature for compressor 2. The automatic startup circuit consists of three series-connected contacts, S53E, K300C, and K301C, in parallel with the "start" push-button switch S58. The switch is bypassed and the compressor starts automatically when all three contacts close at the same time. The compressor does not start automatically at this point in the startup operation, even though the system pressure is zero, because relay contact K301C is open and will not close until the pressure rises above 70 psig and energizes circuits 300 and 301.

So far there has been no change in the operating status of the system; the pressure in line 9000 is zero, all relay and contactor circuits except 302 and 307 are deenergized, and neither compressor is running.

To start compressor 1 the operator momentarily closes push-button switch S55, and the magnetic starter operating coil CC501 is energized by the flow of current through the permissive interlock contact K302B, the "stop" button, coil CC501, and the overload relay contacts. The starter contacts CC501A, -B, and -C close, and the motor starts. Several other events occur simultaneously with the starting of the motor. These are:

1. Auxiliary contact CC501D on the starter closes to energize relay coil KB501. This in turn operates additional auxiliary contacts KB501A, -B, -C, and -D in circuits 500, 501, and 502.

Contact KB501D, connected in parallel with the "start" button S55, closes to maintain the flow of current through coil CC501 so that the motor will continue to run when the "start" button is released.

In circuit 502, contact KB501B opens and contact KB501A closes; the green indicator lamp goes out and the red lamp lights up on main board MB12 to indicate that compressor 1 is running.

Contact KB501C closes to energize one branch of circuit 500, which opens cooling water supply valve FCV-880A. The valve shuts off the flow of cooling water when the compressor is not running to prevent rust-producing condensation from forming on the cylinder wall.

2. Time delay relay KA501, connected in parallel with motor contactor coil CC501, also energizes to operate two contacts: contact KA501A opens in circuit 302, and contact KA501B closes in circuit 500.

The compressor would be damaged if operated even for a short time without a supply of lubricating oil. If the supply fails, contact KA501A operates in parallel with oil pressure switch PS-AC1-C to shut off the compressor motor. The switch closes at 25 psig when the oil pressure increases and opens at 15 psig when the pressure decreases. Since the lube oil pump is driven by the compressor motor, the oil pressure is zero and the switch is open when the motor first starts. Several seconds elapse before the pressure builds up enough to close the switch. In the interval, circuit 302 remains energized through relay contact KA501A, but KA501A is timed to open 7 sec after contactor CC501 closes to start the compressor motor. If the oil pressure fails to close switch PS-AC1-C before contact KA501A opens, relay coil K302 will deenergize to open contact K302B in circuit 501 and shut off the compressor motor. Once closed, switch PS-AC1-C will not open and shut off the compressor motor unless the lube oil pressure falls below 15 psig.

Contact KA501B closes circuit 500 a few seconds after the compressor motor is started. This allows solenoid valve PCV-AC1-E to energize and load the compressor. The closing of contact KA501B is delayed to prevent the compressor from loading before the motor has had a chance to reach its normal operating speed.

The compressor motor runs continuously at a constant speed, and the head pressure is regulated by the automatic operation of the "unloading" valve. This is a pneumatically operated relief valve built into the compressor cylinder head. Air is supplied to the operator through the three-way solenoid valve PCV-AC1-E as shown in Fig. 4.9.1. When the solenoid is deenergized, the air supply is shut off, the operator is vented to atmosphere, and the unloading valve is forced open by spring action; compression is prevented, and the compressor is "unloaded." When the solenoid is energized, air pressure is applied to the operator to close the "unloading" valve, compression resumes, and the compressor "loads." The compressor alternately "loads" and "unloads" as pressure switch PS-AC1-D

closes and opens circuit 500 in response to the pressure in the receiver tanks. When the tank pressure rises to 85 psig, PS-AC1-D opens, solenoid valve PCV-AC1-E is deenergized, and the compressor "unloads." When the tank pressure falls below 75 psig, PS-AC1-D closes, PCV-AC1-E is energized, and the compressor "loads."

The above events occur simultaneously with the closing of motor starting contactor CC501. Both permissive-to-run circuits, 302 and 307, remain energized. The system pressure is still near zero, but compressor 1 is now running, and the pressure begins to increase. With selector switch S53 in the "compressor 1" position, compressor 2 is in the automatic startup mode but does not start at this point, even though the system pressure is low, because relay K301 is not yet energized and contact K301C in circuit 504 is open.

As the pressure rises above 70 psig, pressure switch PS-9000-2 closes to energize relay K300; contact K300A closes in circuit 301, and contact K300B, the automatic start interlock for compressor 2, opens in circuit 504. Relay K301 is energized by the flow of current through contacts S53C and K300A and remains energized through seal-in contact K301A. This makes the operation of circuit 301 independent of relay K300, and relay K301 will remain energized until the operator returns selector switch S53 to the "manual" position.

The system is now operating normally, with compressor 1 running and circuit 500 controlling the system pressure between the limits of 75 and 85 psig. As long as the system pressure is maintained above 70 psig, relay K300 will be energized, and the automatic start interlock K300C in circuit 504 will remain open, but the moment it drops below 70 psig, relay K300 will deenergize to close contact K300C, and compressor 2 will start automatically. Both machines will continue to run unless they are stopped intentionally by operator action or automatically by the operation of the protective interlocks. Pressure switch PS-9000-1 (see Fig. 4.9.1) opens in circuit 988 (see Fig. 4.1.55) to annunciate the low-pressure condition in the auxiliary control room.

Abnormal operating conditions will open temperature and pressure switch contacts to deenergize circuit 302 and shut down compressor 1. It cannot be started again until the condition is corrected and the operator resets relay K302. If either circuit 302 or 307 deenergizes, contact K302C or K307C will open in circuit 990 to sound an alarm in the auxiliary control room.

Both motor starter control circuits are powered by individual step-down transformers connected to the line side of the starting contacts. This arrangement deenergizes the contactor coil and disconnects the motor from the supply line when TVA power fails. When the power returns, the motor will not restart without the operator's attention unless the automatic start mode is in force.

Unnecessary and confusing operations resulting from electrical power interruptions and voltage fluctuations are avoided by connecting the control interlock circuits, 300, 301, 302, and 307, to the 115-V ac reliable power supply. Permissive-to-run circuits 302 and 307 are connected to separate buses so that a loss of power on a single bus cannot disable both machines.

### 4.9.3 Lube Oil Pumps

For normal operations both the fuel- and coolant-salt circulating pumps require a continuous supply of lubricating and cooling oil. Neither pump can be started until the required oil flow rates are established, and these flow rates must be maintained to keep them running. The oil is supplied by separate but identical pumping systems which serve to lubricate and cool the pump bearings and to cool the shield plug located between the bearings and the pump bowl (see Part I, Sects. 5.4.1.4 and 8.3.1).

Each oil system consists basically of a water-cooled oil reservoir, two centrifugal pumps piped in parallel, and an oil filter, all mounted in a supporting framework which is enclosed to form a unitized package. The two packages are located adjacent to each other in the service tunnel area. Flow diagrams of the systems are shown in Figs. 3.7.0 and 3.7.1. The instrumentation shown on these diagrams is described in Sect. 3.7.

The oil pump motor control circuits are diagrammed in Figs. 4.1.32 and 4.1.41. Operational logic diagrams for the circuits are shown in Fig. 4.1.70. Since the two oil systems are identical, the operation of the fuel system circuits, as described here and in Fig. 4.9.3, will serve as a general illustration of the control circuits for both systems.

The two pumps, FOP-1 and FOP-2, are driven by 5-hp 240-V ac three-phase induction-type electric motors. The motors are connected to separate power distribution buses[5] through two NEMA size 1 full-voltage magnetic motor-starting contactors. The starter for FOP-2 is mounted on the wall of the service tunnel near the pump, while FOP-1 is supplied from motor control center G3 in the switchgear room. Each starter is controlled by two push-button stations, one located on main board MB10[6] and the other on auxiliary board OP3,[7] which is mounted directly on the pump package in the service tunnel. The station on MB10 has two buttons, one marked "start" and the other "stop," while the station on OP3 has only one, marked "stop." Both stations utilize two indicating lamps, one red to indicate that the pump motor is on and one green to indicate that it is off. The pumps are normally operated from MB10, and the buttons on OP3 are used only if emergency stopping is required or for testing purposes.

Corresponding control switches and lamps for the coolant-salt system oil pumps, COP-1 and COP-2, are located on main board MB4[8] and auxiliary panel OP4.[3]

Pump operations are semiautomatic. The push buttons may be used at the operator's discretion to operate the pumps individually or simultaneously, but if either one of the two is in operation, the second or standby pump will start automatically whenever the oil pressure in the discharge line of the operating pump falls below 45 psig. This startup feature is completely automatic, and the operator has no control over its functions.

The operating status of the system with the control circuits as shown in Fig. 4.9.3 is as follows: the control power buses are energized, but all relay and contactor coils are deenergized; the green lamps in circuits 507 and 509 are lit and are visible in the main control room and in the service tunnel. Since both motor starters are controlled by identical circuits, the operating sequence for the FOP-1 circuit is typical of both machines. The operation of FOP-1 is initiated when push-button switch S42 in circuit 303 is closed momentarily. This energizes relay KB303 to close contacts KB303A in circuit 303 and KB303B in circuit 506.

Closing contact KB303A energizes time delay relay KA303, which remains energized through seal-in contact KA303F. A second contact, KA303A, combines with pressure switch PS-701-B2 in circuit 308 to form the automatic starting circuit for FOP-2. The discussion of this circuit will be continued later.

When contact KB303B closes in circuit 506, time delay relay K506 energizes and closes contact K506A instantaneously; the motor starter operating coil is then energized by the flow of current from transformer terminal X1, through time delay contact K506A, contactor coil CC506, the overload relay contacts, to terminal X2; the starter contacts CC506A, -B, and -C close, and the pump motor starts. Energizing coil CC506 starts the motor and initiates two other operations simultaneously: First, in circuit 507, contact CC506F opens and contact CC506E closes; the green lamps go out and the red lamps light up to indicate that FOP-1 is running. Second, contact CC506D, which is connected in parallel with the FOP-1 "start" button S42, closes to maintain the flow of current through relay coil KB303 when the "start" button is released; the contactor operating coil CC506 remains energized, and the motor continues to run.

At this point in the startup sequence the operational status of the system is as follows: relays KA303, KB303 and K506 and contactor coil CC506 are all energized; FOP-1 is running, and the discharge pressure in line 701 begins to increase. The pressure is monitored by switch PS-701-B2, which, as previously mentioned, operates a contact in circuit 308. The series-connected contacts PS-701-B2 and KA303A are in parallel with the FOP-2 "start" button S45. Whenever both contacts are closed at the same time, the "start" switch is automatically bypassed, and relay KB308 energizes to start FOP-2.

When FOP-1 first starts, the discharge pressure is low, and switch contact PS-701-B2 is closed, but FOP-2 does not start automatically because the time delay contact KA303A is open and remains open for 5 sec. Normally the discharge pressure will rise above 45 psig in less than 5 sec and open switch contact PS-701-B2 before contact KA303A closes. If the system functions properly, the FOP-1 discharge pressure rises above 45 psig, PS-701B2 opens, and contact KA303A closes. FOP-1 is now in operation, and FOP-2 is in a standby condition. If the FOP-1 discharge pressure falls below 45 psig, pressure switch PS-701-B2 will close the FOP-2 automatic start circuit. Pressure switches PS-701-B1 and PS-702-B1 open in circuit 847 to sound an alarm in the main control room if discharge pressure at both pumps is low.

It is obvious from the foregoing explanation that the purpose of the time delay contact KA303A in circuit 308 is to prevent the standby pump from starting automatically while the selected pump is building the system pressure up to the normal operating value. It also prevents the standby pump from starting when the operating pump is stopped manually. If the FOP-1 stop button S41 is pressed, relays KA303 and KB303 deenergize, FOP-1 stops, and contact KA303A opens instantaneously in circuit 308 to prevent FOP-2 from starting.

The pump motor and the motor starter operating coil CC506 are both energized from the same TVA supply bus. Sustained power outages will deenergize the coil and disconnect the motor from the power line. The motor will not restart when the power returns without operator attention. The purpose of the time delay relay K506 is to hold the contactor closed during momentary outages and voltage dips so that the motor will continue to run without operator attention when the power system returns to normal. When voltage dips occur on the line, relay K506 drops out almost immediately, but the opening of contact K506A is delayed a few seconds, and CC506 remains energized. The coil will hold the contactor closed if the voltage does not go below 60% of the rated coil voltage.

The load on each pump is determined by measuring the current in one phase of each motor. Two current transformers, one for each pump motor, are connected to a single ammeter through a selector switch as shown in Fig. 4.9.3. An identical circuit measures the coolant salt system oil pump motor currents. The two ammeters and the two selector switches are located in the service room on auxiliary control panel OP2.

Circuit 305 controls valve PCV-703-B1 in the fuel pump lubricating oil line 703. Oil leaking past the lower shaft seal of the pump into the fuel salt would cause the oil level to drop in reservoir OT1. When the level drops,

switch contact LSS-OT1-A3 opens to deenergize circuit 305 and close the valve.

### 4.9.4 Component Coolant Pump

Control circuits 312, 313, 314, and 315 shown in Fig. 4.1.33 control the operation of component coolant pumps CCP 1 and CCP 2 through power system circuit breakers H and E. Although the purposes for and the arrangements of the protective interlocks (group I and group II in Fig. 4.2.2.1) are different, the basic scheme devised for opening and closing the circuit breakers is the same as that described for the fuel salt pump in Sect. 4.2.2. One difference is the safety-grade classification for part of the wiring in all of the above circuits. One requirement of safety is that the integrity of the secondary containment vessel be protected from excessive vacuum pressure. This pressure can be produced by the component coolant pumps. If high pressure exists in the vessel, all of the K85 relay contacts (see Fig. 4.1.7) will open to shut off both pumps and prevent them from being started again until the pressure has returned to normal. The K85 relay contacts, the relays in circuits 312 and 314, and the wiring between are therefore installed to meet safety system requirements.

As far as their operation is concerned, CCP 2 control circuits 314 and 315 are identical to circuits 312 and 313, which control CCP 1. Protective interlocks in each set of circuits impose two restrictions on the operation of the pumps. First, both cannot run simultaneously, and second, neither will continue to operate without a supply of lube oil. The capacity of the plant's electrical power distribution system is not enough to operate two pumps at once, but this is not necessary, since one pump is capable of supplying all of the component cooling air needed to operate the reactor system.

The operation of CCP 1 is typical. If both pumps are off and reactor cell pressure is normal, relays KB312 and KB314 are energized, and the operator has the option to start either pump by momentarily closing one of the "start" switches. If S61 in Fig. 4.9.4 is closed, circuit breaker H closes to start CPP 1. At the same time, auxiliary contact *a*, also on circuit breaker H, closes to energize relay K313. Contact K313E immediately opens control circuit 314 to prevent the operation of CCP 2. Parallel contacts K313B and PS791A operate to shut off the coolant pump motor unless the lube oil pressure rises above 5 psig (referenced to reactor cell atmosphere) within 15 sec after startup. Before the pump starts, PS791A is open, and relay K312, which operates the trip coil in circuit breaker H, is energized through the normally closed time delay contact K313B. Since the lube oil pump is driven by the coolant pump motor, several seconds elapse after the motor starts before the oil pressure increases enough to close switch contact PS791A. Contact K313B is timed to open 15 sec after the coolant pump is started, and if PS791A does not close within this time period, relay KB312 will deenergize and shut the pump off.

This is also an appropriate time to discuss the operation of the three-way solenoid valve HCV-PdCV-960A2 in circuit 146, Fig. 4.1.12. This valve is part of the system which automatically controls the differential pressure across the component coolant pumps. When the differential pressure across the pumps is less than 1.3 psi (startup conditions), switch contact PdS-960A2 is open, and the solenoid valve is deenergized. This shuts off the supply of instrument air to the controlling instrument PdI-960A. No signal is transmitted to control valve PdCV-960A, and it remains wide open. When the differential pressure rises above 1.3 psi, switch contact PdS-960A2 closes circuit 146 and energizes PdCV-960A2. This restores the supply of air to the pressure controller, and the control valve moves slowly to a throttling position. The complete control system is fully described in Sect. 3.6.

### 4.9.5 Steam Dome Feedwater Control

The steam dome feedwater control valves in circuits 143, 144, and 145 (see Fig. 4.1.12) are part of the drain tank afterheat removal system, which is discussed in Sect. 4.2.9. The steam dome condensate drain valves in circuit 81 (see Fig. 4.1.6) are discussed in Sect. 4.8.3.5.

### 4.9.6 Cover Gas System

The MSRE cover gas system supplies helium for use as an inert gas above the salt surfaces, as described in Part I, Sect. 10. The system consists of a helium supply, dryers, oxygen removal units, a treated helium storage tank, and various valve manifolds and distribution piping, all instrumented as indicated in Fig. 3.5.

Helium is normally supplied from tanks mounted on a trailer parked at the northwest corner of the diesel house. Since it must be essentially free of water vapor and oxygen to reduce the likelihood of oxide precipitation in the salt, the helium is passed through one of two parallel-connected helium-treating systems installed in the line between the trailer and the treated helium storage tank. The two treatment systems are located in the second bay of the diesel house, and each one consists of three units: a helium dryer, a preheater, and an oxygen removal unit. The units are heated to operating temperatures by separate electrical-resistance-type heaters. These heaters are energized and automatically controlled by the six identical groups of circuits shown in Fig. 4.1.35 and 4.1.36.

The group controlling preheater 1 in Fig. 4.1.35 is a typical example. The heating element and the control circuits are connected to a 220-V, single-phase ac supply through a combination motor starter. The gas temperature controller, TIC-PH1-1, and the heating

element in circuit 403 are energized directly from the 220-V bus, which is connected to the load side of circuit breaker CB-1. The temperature controller TS-PH1-2, the heater contactor operating coil K401, and control relays K400, K401, and K402 are energized from a separate 110-V bus supplied by a step-down transformer that is also connected to the load side of circuit breaker CB-1.

The temperature control instruments, the contactors, and the relays are all mounted on two auxiliary control panels, CG1 and CG2,[11] together with the operator's push-button switches, indicating lamps, and a variable autotransformer. The two panels are located in the diesel house near the helium treatment units.

When circuit breaker CB-1 is open, control circuits 400 through 403 are all deenergized. This is the condition of the circuits as shown in Fig. 4.1.35. To energize preheater 1, the operator first closes CB-1; the green lamp in circuit 402 lights up immediately to indicate that the control power buses are energized; temperature controller TS-PH1-2 is energized, and current flows through the two closed contacts in circuit 400 to energize relay K400; contact K400A closes in circuit 401, but the contactor coil K401 remains deenergized because of the open push-button switch HS-PH1-1. The temperature controller TS-PH1-2 reads a temperature signal from a thermocouple embedded in the heating element. The controller operates the two contacts in circuit 400, but they remain closed unless the temperature of the heating element becomes excessive or the continuity of the thermocouple circuit is broken. In either case, relay K400 deenergizes to open contact K400A, which deenergizes contactor coil K401 to shut off the heating element.

If the system is operating normally when CB-1 is closed, the indicated temperature is below the limit and control set points on both TS-PH1-2 and TIC-PH1-1, the two contacts in circuit 400 are closed, and contact TIC-PH1-1 in heater circuit 403 is closed. Power is applied to the heating element when the operator momentarily closes the "on" contact on push-button switch HS-PH1-1 and energizes contactor coil K401 to close contact K401C in circuit 403. The heater is energized by the flow of current from the H (hot) bus, through the variable autotransformer, controller contact TIC-PH1-1, contact K401C, and the heating element, to the N (neutral) bus. When the operator releases the "on" button, circuit 401 remains completed through the "off" button on switch HS-PH1-1, contact K400A, and also through a "holding" contact K401B which closed when the contactor coil K401 energized. If either the "off" button or contact K400A opens, even momentarily, coil K401 drops out and contact K401B opens, breaking the control circuit until the "on" button is pressed once again.

When the contactor coil is energized, contact K401D in lamp circuit 402 opens and contact K401A closes, the green lamp goes out, and the red lamp lights up to indicate that power is applied to heater circuit 403. The gas temperature rises until the indication on controller TIC-PH1-1 exceeds the set point and contact TIC-PH1-1 opens circuit 403 to deenergize the heating element. The controller alternately opens and closes contact TIC-PH1-1, turning the heater on and off to maintain the desired gas temperature.

The voltage applied to the heater can be varied between 0 and 220 V by manually adjusting the variable autotransformer in heater circuit 403. Thus the maximum amount of heat available to the system is adjustable, since the power output of the heater is proportional to the square of the applied voltage. This adjustment is made by trial and error to get optimum control for a given set of operating conditions.

If the relay in circuit 400 or any of the corresponding relays in the other five heater circuits deenergize, one of the contacts in circuit 402 opens to deenergize relay K402. Contact K402A opens circuit 965 (Fig. 4.1.54) to annunciate the high-temperature condition in one of the heating elements.

### 4.9.7 Miscellaneous Motor Controls

Circuits 514 through 521, Fig. 4.1.41, and circuits 529 through 564, Figs. 4.1.42 and 4.1.43, control induction-type electrical motors which drive the following auxiliary units:

| | | |
|---|---|---|
| MB2, MB4 | Radiator annulus blowers | Fig. 3.3.1 |
| TWP1, TWP2 | Treated water pumps | Fig. 3.8.0 |
| CTP1, CTP2 | Cooling tower pumps | Fig. 3.8.0 |
| TF1, TF2 | Cooling tower fans | Fig. 3.8.0 |
| CP3 | Component cooling pump 3 | Fig. 3.2.3 |
| RCC1, RCC2 | Reactor cell space cooler fans | Fig. 3.8.0 |
| CCC1, CCC2 | Coolant cell space cooler fans | Fig. 3.8.0 |
| DCC | Drain tank cell space cooler fan | Fig. 3.8.0 |

Each motor is connected to a TVA 480-V three-phase power bus through a full-voltage magnetic motor starter.[12] The starters are mounted in the separate compartments of two unitized motor control centers, G-3 and G-4, located in the switchgear room (see Part I, Sect. 19, Description of Reactor Design). Each starter unit consists of a magnetically operated contactor and circuit breaker combination. The circuit breaker serves as a manual disconnect switch and provides short-circuit protection for the motor and starter circuits. The TVA bus is an integral part of the control centers, and each starter is conveniently connected to the bus by a special plug-in arrangement. Individual steel conduits carry the wires between the motor starters in the switchgear room and the motors located throughout Building 7503.

The operator controls for all of the motor starters are located in the main control room. Each starter except

the two serving MB2 and MB4 is controlled by a push-button station mounted on main board MB12.[13] Push-button stations for MB2 and MB4 are mounted on main board MB4. Each station includes two push-button switches, one marked "start" and the other marked "stop," and two indicating lamps. The red lamp lights up when the motor is running, and the green lamp lights up when it is not running.

The operating coils and auxiliary contacts on each motor starter are individually wired to the terminals of a centrally located junction box. The junction box, JB26,[14] is mounted beneath the main control room on a wall that is accessible from the 840-ft level of Building 7503. A 12-conductor control cable extends from the junction box to each starter compartment in the motor control center. Individual wires extend from JB26 to the control stations. Jumper wires between terminal points in JB26 interconnect the contactor coils and contacts with the control station push buttons and lamps.

All of the starters are controlled by identical circuit configurations. The configuration formed by circuits 529, 530, and 531 (Fig. 4.1.42) to control treated water pump 1 (TWP-1) is a typical example. This is the conventional low-voltage-protection-type circuit which is described in Sect. 4.8.4.1. The addition of a time delay relay K529 between the push buttons and the contactor operating coil CC523 makes the circuit appear unconventional, but the basic operating characteristics are not altered.

The TWP-1 circuits obtain a 120-V supply of power from a small step-down control transformer that is also connected to the line side of the motor starting contactor. When the contacts are in the positions shown in Fig. 4.1.42, the pump motor is off. When the control power bus is energized, the circuit remains unchanged except for the green lamp in circuit 531 which lights up on MB3 to indicate that the motor is not running and the control power is on.

Contacts S71 and S72 in circuit 529 represent the two-button start-stop control station. The push-button contacts are spring return and make or break their contacts only momentarily while depressed. Pushing the "start" button energizes relay coil K529; time delay contact K529A closes instantly and energizes contactor coil CC530. The coil closes the power-line contacts to start the motor and at the same time closes seal-in contact CC530D to maintain the flow of current in circuit 529 when the "start" button is released. Contactor coil CC530 also operates the two contacts in lamp circuit 531. When the coil energizes, contact CC530F opens, and contact CC530E closes; the green lamp goes out and the red lamp lights up to indicate that TWP-1 is running.

The time delay relay helps maintain the continuity of system operations by preventing needless pump shutdowns. Although the circuit is designed to deenergize and remain deenergized when a low-voltage condition develops, the slight delay incorporated in the opening operation of contact K522A maintains the continuity of the control circuits during short intervals when disturbances such as momentary power failures or voltage dips occur on the TVA power system. This keeps the motor connected to the power system during such intervals so that it continues to run without further attention from the operator when the power system returns to normal. If a power failure lasts for more than a few seconds or the overload relay contacts open, or if the "stop" button is depressed for a few seconds, contactor coil CC530 deenergizes and remains deenergized. The motor stops and will not restart until the "start" button is again depressed. If the overload relay operates, it must be reset manually before the motor can be restarted.

Another group of motors which drive the pump room sump pumps, the pump room pit pump, the waste pump, and the waste tank blower are controlled by locally mounted starters and push-button stations. The control circuits for these motor starters are not identified by the instrumentation and controls numbering system (see Sect. 7.2). However, the circuit designs are essentially the same as those described above.[15]

Operational logic diagrams for all of the control circuits discussed in this section are shown in Fig. 4.1.64, 4.1.70, 4.1.71, and 4.1.72.

### 4.9.8 Fuel and Coolant Pump Level System Circuits

It is obvious from the descriptions of the master control circuits given in Sect. 4.2 that salt levels, particularly those in the fuel- and coolant-salt pump bowls and in the fuel pump overflow tank, are very important operating parameters in the MSRE system. At every stage of reactor operations, electrical interlocks operate automatically as the salt levels change to impose restrictions on the use of the fill and drain control circuits, the operational mode selector circuits, and the circulating pump motor control circuits. The interlock contacts are actuated by pilot devices that operate in response to signals generated by the three level measuring systems shown in Fig. 4.9.5.

An examination of the diagrams in Fig. 4.9.5 reveals that each pump bowl measuring system utilizes only one set of control-grade pilot devices and one level

recorder but that each set of devices as well as the recorder may receive signals from more than one level detector. The devices in the fuel system may be connected to either one of two bubbler-type level detectors, LT-596B and LT-593C; those in the coolant system may be connected to any one of three detectors. Two of the three, LT-598C and LT-595C, are bubbler-type detectors that generate pneumatic output signals, but the third detector, LE-CP-A, utilizes a ball float with a differential transformer to generate an electrical output signal which is then converted to a pneumatic signal (Sect. 6.9). In both systems the connection between the single set of pilot devices and one of the two bubbler-type detectors is determined by the position of a three-way solenoid-operated valve: HCV-593C in the fuel pump level system and HCV-598C1 in the coolant pump system. In the latter system the output signal from the selected bubbler-type detector is passed through a second three-way solenoid valve, HCV-598C2, which is also connected to the pneumatic output signal from level element LE-CP-A. The connection between the pilot devices and one of these two signal sources is determined by the position of the valve.

No control-grade pilot devices are connected to the overflow tank level system. The outputs from the two bubbler-type detectors, LT-599B and LT-600B, have no common connection. Each detector operates a separate safety-grade pilot device. Contacts on these devices are used in safety circuits 18 and 19, which are described in Sect. 4.7.2.

The three bubbler-type level detector systems in Fig. 4.9.5 are all identical. Each system requires a constant flow of purge gas through the dip tube and reference pressure lines. The gas is supplied through three solenoid-operated block valves. The level signals are obtained from two differential pressure transmitters connected between each dip tube line and the reference pressure line together with two equalizing valves. For normal operating conditions the block valves remain open and the equalizing valves remain closed.

The above description of the salt level instrument systems is very brief, but it provides the basis needed to understand the control circuit description which is to follow. A more detailed description of the bubbler-type level elements, the differential pressure transmitters, and the weld-sealed valves is given in Sects. 5.8.1, 6.8, and 6.1.9. The operation of the instruments in all three systems is also discussed in Chap. 3, Sects. 3.1, Fuel Salt Circulating System, and 3.3, Coolant Salt Circulating System.

It should be apparent from the foregoing discussion that the control elements in all three systems are the solenoid valves which are operated by opening and closing manual switch contacts in the following groups of circuits:

1. Circuits 63, 64, 65, and 69 (Fig. 4.1.5), fuel pump bowl level system.
2. Circuits 66, 67, and 68 (Fig. 4.1.5), overflow tank level system.
3. Circuits 75, 76, 77, 78, and 79 (Fig. 4.1.6), coolant pump bowl level systems.

In each system the valve operations must be carefully coordinated to avoid misoperations that could result in hazardous or undesirable conditions but at the same time fulfull the following requirements:

1. The level recorders and pilot devices in the fuel and coolant pump systems must be switched from one level transmitter signal to another.
2. The solenoid valves in the fuel and coolant pump helium supply lines must be operated individually for testing purposes: the block valves must be closed periodically for leak tests, and the equalizing valves must be opened periodically to demonstrate that the dip tubes and associated lines are clear and functioning properly and that pressure changes in the dip tubes will be sensed by the transmitters (see Sect. 3.1.2). Closing the equalizing valves also provides a means of checking the zero calibration of the differential pressure transmitters.
3. The operations described in 1 and 2 above must be conducted without disturbing the pilot devices or the recorded signal. This is necessary to prevent spurious operations of the control interlocks which result in undesirable and unnecessary shutdowns.
4. Output signals from the two level transmitters in the fuel pump overflow tank system cannot be switched while the reactor is in operation because they actuate two separate sets of safety-grade pilot devices. The solenoid valves in the helium supply lines must be operated individually for testing purposes but only when the reactor is shut down.

With so many valves in each system, these requirements present a complex operational problem, and the probability of misoperations is high; therefore, the burden of coordinating valve operations is removed from the operator by using rotary-type position selector switches to drive the contacts in each group of valve

circuits. The contact arrangements and operating sequences are designed to establish the correct operating modes automatically as the switches move from one position to another. The operational status of each control element for each position of the selector switches is given in Tables 4.9.1, 4.9.2, and 4.9.3.

**Table 4.9.1. Fuel pump level system switches.**

S36
FUEL PUMP LEVEL SYSTEM—SELECTOR SWITCH

| CONTROL ELEMENTS | CONTROL ELEMENT OPERATING CONDITIONS FOR EACH SWITCH POSITION. | | | | |
|---|---|---|---|---|---|
| | SWITCH POSITIONS | | | | |
| | OFF | 1 | 2 | 3 | 4 |
| | | RECORD LT-596-B | | RECORD LT-593-C | |
| | | LT-596-B | LT-596-B LT-593-C | LT-596-B LT-593-C | LT-593-C |
| *1 BLOCK VALVE HCV-593-B1 | CLOSED | OPEN | OPEN | OPEN | CLOSED |
| *1 EQUALIZER VALVE HCV-593-B5 | OPEN | CLOSED | CLOSED | CLOSED | OPEN |
| REFERENCE BLOCK VALVE HCV-593-B2 | CLOSED | OPEN | OPEN | OPEN | OPEN |
| *2 EQUALIZER VALVE HCV-593-B4 | OPEN | OPEN | CLOSED | CLOSED | CLOSED |
| *2 BLOCK VALVE HCV-593-B3 | CLOSED | CLOSED | OPEN | OPEN | OPEN |
| LEVEL SYSTEM *1 TRANSMITTER. LT-596-B | OFF | ON | ON | ON | OFF |
| LEVEL SYSTEM *2 TRANSMITTER. LT-593-C | OFF | OFF | ON | ON | ON |
| TRANSMITTER SIGNAL SWITCHING VALVE. HCV-593-C | DEENERGIZED | DEENERGIZED | DEENERGIZED | ENERGIZED | ENERGIZED |
| TRANSMITTER SIGNAL RECORDED BY. LR-593-C | LT-596-B LEVEL DETECTOR *1 | LT-596-B LEVEL DETECTOR *1 | LT-596-B LEVEL DETECTOR *1 | LT-593-C LEVEL DETECTOR *2 | LT-593-C LEVEL DETECTOR *2 |
| | | | SEE ** NOTE-1 | | |

S37
FUEL PUMP LEVEL SYSTEM—TEST SWITCH

| CONTROL ELEMENTS | CONTROL ELEMENT OPERATING CONDITIONS FOR EACH SWITCH POSITION. | | | | | |
|---|---|---|---|---|---|---|
| | SWITCH POSITIONS | | | | | |
| | 1 | 2 | 3 | 4 | 5 | 6 |
| | *1 EQUALIZER VALVE | *1 BLOCK VALVE | OFF | REFERENCE BLOCK VALVE | *2 BLOCK VALVE | *2 EQUALIZER VALVE |
| | | | SR* | | | |
| *1 BLOCK VALVE HCV-593-B1 | OPEN | CLOSED | OPEN | OPEN | OPEN | OPEN |
| *1 EQUALIZER VALVE HCV-593-B5 | OPEN | CLOSED | CLOSED | CLOSED | CLOSED | CLOSED |
| REFERENCE BLOCK VALVE HCV-593-B2 | OPEN | OPEN | OPEN | CLOSED | OPEN | OPEN |
| *2 EQUALIZER VALVE HCV-593-B4 | CLOSED | CLOSED | CLOSED | CLOSED | CLOSED | OPEN |
| *2 BLOCK VALVE HCV-593-B3 | OPEN | OPEN | OPEN | OPEN | CLOSED | OPEN |
| | SEE NOTE-3 | | SEE ** NOTE-1 | SEE NOTE-4 | SEE NOTE-2 | |

*—SPRING RETURN TO "OFF" POSITION.
**—SEE TABLE 4.9.3 FOR ALL NOTES.

**Table 4.9.2. Coolant pump level system switches.**

S39
COOLANT PUMP LEVEL SYSTEM — SELECTOR SWITCH

| CONTROL ELEMENTS | CONTROL ELEMENT OPERATING CONDITIONS FOR EACH SWITCH POSITION. | | | | | |
|---|---|---|---|---|---|---|
| | SWITCH POSITIONS | | | | | |
| | OFF | 1 | 2 | 3 | 4 | 5 |
| | | RECORD LT-598-C | | RECORD LE-CP-A | RECORD LT-595-C | |
| | | LT-598-C | LT-598-C LT-595-C | | LT-598-C LT-595-C | LT-595-C |
| *1 BLOCK VALVE HCV-595-B2 | CLOSED | CLOSED | OPEN | OPEN | OPEN | OPEN |
| *1 EQUALIZER VALVE HCV-595-B5 | OPEN | OPEN | CLOSED | CLOSED | CLOSED | CLOSED |
| REFERENCE BLOCK VALVE HCV-595-B1 | CLOSED | OPEN | OPEN | OPEN | OPEN | OPEN |
| *2 EQUALIZER VALVE HCV-595-B4 | OPEN | CLOSED | CLOSED | CLOSED | CLOSED | OPEN |
| *2 BLOCK VALVE HCV-595-B3 | CLOSED | OPEN | OPEN | OPEN | OPEN | CLOSED |
| BUBBLER *1 LEVEL TRANSMITTER. LT-595-C | OFF | OFF | ON | ON | ON | ON |
| BUBBLER *2 LEVEL TRANSMITTER. LT-598-C | OFF | ON | ON | ON | ON | OFF |
| FLOAT LEVEL TRANSMITTER. LE-CP-A | ON | ON | ON | ON | ON | ON |
| TRANSMITTER SIGNAL SWITCHING VALVE. HCV-598-C1 | DEENERGIZED | DEENERGIZED | DEENERGIZED | DEENERGIZED | ENERGIZED | ENERGIZED |
| TRANSMITTER SIGNAL SWITCHING VALVE. HCV-598-C2 | ENERGIZED | DEENERGIZED | DEENERGIZED | ENERGIZED | DEENERGIZED | DEENERGIZED |
| TRANSMITTER SIGNAL RECORDED BY. LR-595-C | LE-CP-A FLOAT | LT-598-C BUBBLER *1 | LT-598-C BUBBLER *1 | LE-CP-A FLOAT | LT-595-C BUBBLER *2 | LT-595-C BUBBLER *2 |
| | | | | | SEE ** NOTE-1 | |

S40
COOLANT PUMP LEVEL SYSTEM — TEST SWITCH

| CONTROL ELEMENTS | CONTROL ELEMENT OPERATING CONDITIONS FOR EACH SWITCH POSITION. | | | | | |
|---|---|---|---|---|---|---|
| | SWITCH POSITIONS | | | | | |
| | 1 | 2 | 3 | 4 | 5 | 6 |
| | 2 EQUALIZER VALVE | 2 BLOCK VALVE | OFF | REFERENCE BLOCK VALVE | 1 BLOCK VALVE | 1 EQUALIZER VALVE |
| | | | SR* | | | |
| 1 BLOCK VALVE HCV-595-B2 | OPEN | OPEN | OPEN | OPEN | CLOSED | OPEN |
| 1 EQUALIZER VALVE HCV-595-B5 | CLOSED | CLOSED | CLOSED | CLOSED | CLOSED | OPEN |
| REFERENCE BLOCK VALVE HCV-595-B1 | OPEN | OPEN | OPEN | CLOSED | OPEN | OPEN |
| 2 EQUALIZER VALVE HCV-595-B4 | OPEN | CLOSED | CLOSED | CLOSED | CLOSED | CLOSED |
| 2 BLOCK VALVE HCV-595-B3 | OPEN | CLOSED | OPEN | OPEN | OPEN | OPEN |
| | SEE NOTE-2 | | SEE ** NOTE-1 | SEE NOTE-4 | SEE NOTE-3 | |

*— SPRING RETURN TO "OFF" POSITION.
**— SEE TABLE 4.9.3 FOR ALL NOTES.

**Table 4.9.3. Fuel pump overflow tank level system switch.**

| S38 FUEL PUMP OVERFLOW TANK LEVEL SYSTEM—TEST SWITCH | | | | | | |
|---|---|---|---|---|---|---|
| CONTROL ELEMENTS | CONTROL ELEMENT OPERATING CONDITIONS FOR EACH SWITCH POSITION. | | | | | |
| | SWITCH POSITIONS | | | | | |
| | 1 | 2 | 3 | 4 | 5 | 6 |
| | *1 EQUALIZER VALVE O | *1 BLOCK VALVE | OFF ► SR* ◄ | REFERENCE BLOCK VALVE | *2 BLOCK VALVE | *2 EQUALIZER VALVE O |
| *1 BLOCK VALVE HCV-599-B1 | OPEN | CLOSED | OPEN | OPEN | OPEN | OPEN |
| *1 EQUALIZER VALVE HCV-599-B5 | OPEN | CLOSED | CLOSED | CLOSED | CLOSED | CLOSED |
| REFERENCE BLOCK VALVE HCV-599-B2 | OPEN | OPEN | OPEN | CLOSED | OPEN | OPEN |
| *2 EQUALIZER VALVE HCV-599-B4 | CLOSED | CLOSED | CLOSED | CLOSED | CLOSED | OPEN |
| *2 BLOCK VALVE HCV-599-B3 | OPEN | OPEN | OPEN | OPEN | CLOSED | OPEN |
| | SEE NOTE—4 | | | | | |

*—SPRING RETURN TO "OFF" POSITION.

**NOTES:**

1. THESE SWITCH POSITIONS REPRESENT CONTROL ELEMENT CONDITIONS AS SHOWN IN THE DIAGRAMS, FIG. 4.9.1.
2. PLACING THE TEST SWITCH IN THESE POSITIONS HAS NO EFFECT ON THE VALVES WHEN THE CORRESPONDING SELECTOR SWITCH IS IN POSITIONS OFF, 3, & 4 (BUBBLER *2 IN SERVICE).
3. PLACING THE TEST SWITCH IN THESE POSITIONS HAS NO EFFECT ON THE VALVES WHEN THE CORRESPONDING SELECTOR SWITCH IS IN POSITIONS OFF, 1, & 2 (BUBBLER *1 IN SERVICE).
4. THIS SWITCH MUST NOT BE MOVED FROM THE "OFF" POSITION WHILE THE REACTOR IS IN OPERATION. THE TWO LEVEL DETECTORS ON THE OVERFLOW TANK OPERATE SEPARATE AND INDEPENDENT INTERLOCKS IN THE SAFETY CIRCUITS AND THE REACTOR WILL SHUT DOWN IF EITHER LEVEL DETECTOR IS TURNED "OFF".

Two switches, one for selecting the mode of operation and one for conducting tests, are provided for each of the pump bowl level systems. The operational model selector switches, S36 and S39, are located in the main control room on main boards MB8[16] and MB6[17] along with level recorders LR-593-C and LR-595C. No selector switch is provided for the overflow tank level detectors since both must operate continuously while the reactor is in operation. The test switches S37, S40, and S38 for all three level systems are located in the transmitter room on transmitter boards TB5[18] and TB6.[19] Six level indicators, one connected to read the output signal from each transmitter, are also mounted on TB5 and TB6.

The operation of the fuel pump system switches shown in Table 4.9.1 is typical. Test switch S37 always remains in the "off" position except for brief periods when tests are being conducted. When selector switch S36 is in the "off" position, all three block valves are closed, the two equalizer valves are open, and both level detectors are off (zero output signal from LT-596B and LT-593C). When the switch is moved to position 1, the No. 1 and reference line block valves open, and the No. 1 equalizer valve closes to turn on level detector 1 (output signal from LT-596B increases with salt level). Level detector 2 remains off. When the switch is moved to position 2, level detector 1 remains on, the No. 2 block valve opens, and the No. 2 equalizer valve closes

to turn on level detector 2 (output signals from both LT-596B and LT-593C increase with salt level). Since the three-way solenoid valve, HCV-593, is deenergized when switch S36 is in positions "off," "1," and "2," the pilot devices and the level recorder LR-593C are all connected to read the output signal from level detector 1 (LT-596B). When switch S36 is moved to position 3, solenoid valve HCV-593C is energized, and the level recorder connection is switched to read the output signal from level detector 2 (LT-593C). Since the output signals from the two detectors are equal, the level recording, the pilot devices, and thus the control circuit interlocks are not disturbed by the switching operation. Switch position 4 reverses the control element conditions described for position 1; that is, level detector 2 remains on, and level detector 1 is turned off. It is important to note that in every switch position except "off," at least one level detector is turned on and is connected to the level recorder and the control interlock pilot devices. Also, both detectors are always turned on when the level recorder and pilot devices are switched from one to the other. These features make the operation of the level systems nearly foolproof as far as the operator is concerned.

The above description also applies to the operation of the coolant pump selector switch S39 (Table 4.9.2). S39 has one additional operating position, but otherwise it is identical to switch S36. Position 3 on S39 energizes three-way solenoid valve HCV-598-C2 and connects the level recorder LR-595C and the control interlock pilot devices to the output signal from float-type level transmitter LE-CP-A. Positions "off," 1, 2, 4, and 5 on S39 correspond to positions "off," 1, 2, 3, and 4 on switch S36.

Test switches S37 and S40 are identical, and both remain in the "off" position unless the operator is conducting leak tests on the helium system block and equalizer valves. The valves can be tested individually by moving the switches to other switch positions while observing system pressures as described in Sect. 3.1.2. Both switches are spring-loaded and return automatically to the "off" position when released. The switches may be rotated at will from one position to another without upsetting the level recording or the control interlock pilot devices. The contacts are arranged so that the test switches have no effect on the control circuits of any valves associated with a level detector that is connected to these devices. Tests can only be performed on valves associated with the level detector that is not connected to the pilot devices. Refer to circuit 63, Fig. 4.1.5, for an illustration. All of the solenoid valves in the dip tube helium lines open when energized. When selector switch S36 is in position 1 or 2, level detector 1 is connected to the level recorder and pilot devices. The No. 1 block valve HCV-593B1 is energized through closed contacts S36A and S36B. Contacts S36C and S36D are both open, and the No. 1 equalizer valve HCV-593B5 is deenergized. Now, if test switch S37 is turned to the "No. 1 block" position, contact S37A opens, but it obviously will have no effect on the circuit. If the switch is turned further to the "No. 1 equalizer" position, contact S37B closes but does not affect the status of the circuit because series-connected contact S36D remains open. When selector switch S36 is in position 3 or 4, level detector 2 is connected to the level recorder and pilot devices. The No. 1 block valve HCV-593C1 is energized through closed contacts S37A and S36A. The No. 1 equalizer valve remains deenergized, but contact S36D closes. Now, when the test switch S37 is turned to the "No. 1 block" position, contact S37A opens and deenergizes the No. 1 block valve. Turning the switch to the No. 1 equalizer position closes contact S37B and energizes the No. 1 equalizing valve.

Contacts on selector switches S36 and S39 also control the operation of annunciator circuits 835 and 827 (Fig. 4.1.52). Pressure switches[20,21] connected to the helium supply lines operate the contacts in these circuits to sound an alarm in the main control room if the pressure in any line becomes too high or too low. The selector switch prevents the alarm from sounding if the flow of helium is stopped intentionally. If a selector switch is turned to a position which closes one of the dip tube line block valves (one level detector is deliberately turned off), it also closes a contact in the corresponding annunciator circuit. This contact bypasses the two contacts operated by the pressure switches connected to the same line. For example: when switch S36 is in position 1, contact S36M is closed, and contacts PS-593A1 and PS-593A2 cannot affect the operation of annunciator circuit 835.

## References

1. Oak Ridge National Laboratory drawings:

D-HH-Z-41782, Instrument Air Distribution Single Line Diagram, Sheet 1

D-HH-Z-41783, Instrument Air Distribution Single Line Diagram, Sheet 2

2. Oak Ridge National Laboratory drawing D-KK-C-41152, Process Equipment Electrical Distribution System.

3. Oak Ridge National Laboratory drawings:

D-KK-C-41158, Interconnection Diagram for Instrument Air Compressors 1 and 2

D-KK-C-41143, Plan, Compressors 1 and 2 Control Center

4. Oak Ridge National Laboratory drawings:

E-HH-B-40555, Composite Control Board Layout

D-HH-B-40567, Main Control Board, Panel 12, Detail Layout

D-HH-B-41594, Main Control Board, Panel 12, Wiring Diagram

5. Oak Ridge National Laboratory drawing D-KK-C-41152, Process Equipment Electrical Distribution System.

6. Oak Ridge National Laboratory drawings:

D-HH-B-40565, Main Control Board, Panel 10 Layout

D-HH-B-41592, Main Control Board, Panel 10 Wiring Diagram

D-HH-B-41629, Main Control Board, Panel 10 Pneumatic Diagram

7. Oak Ridge National Laboratory drawings:

D-HH-B-41722, Cooling Oil Control Board, Composite Layout

D-HH-B-41727, Cooling Oil Control Board, Panels 1, 2, 3, and 4, Wiring Diagram

8. Oak Ridge National Laboratory drawings:

D-HH-B-40559, Main Control Board, Panel 4 Layout

D-HH-B-41586, Main Control Board, Panel 4 Wiring Diagram

D-HH-B-41623, Main Control Board, Panel 4 Pneumatic Diagram

9. Oak Ridge National Laboratory drawings:

D-KK-C-41194, Wiring Diagrams, Bus No. 4, Breakers A-2, A-3, F, D, and E

D-KK-C-41195, Wiring Diagrams, Bus No. 3, Breakers A-1, A-5, K, L, M, N, G, H, and J

10. Oak Ridge National Laboratory drawing D-AA-B-40510, Off-Gas and Component Air Coolant Systems, Instrument Application Diagram.

11. Oak Ridge National Laboratory drawings:

D-HH-B-41757, Cover Gas System, Control Panel 1, Layout

D-HH-B-41758, Cover Gas System, Control Panel 1, Wiring Diagram

D-HH-B-41761, Cover Gas System, Control Panel 2, Layout

D-HH-B-41762, Cover Gas System, Control Panel 2, Wiring Diagram

12. Oak Ridge National Laboratory drawing D-KK-C-41152, Process Equipment Electrical Distribution System.

13. Oak Ridge National Laboratory drawings:

E-HH-B-40555, Composite Control Board Layout

D-HH-B-40567, Main Control Board, Panel 12, Detail Layout

D-HH-B-41594, Main Control Board, Panel 12, Wiring Diagram

14. Oak Ridge National Laboratory drawings:

D-KK-C-41170, Wiring Diagram, JB26, Sheet 1

D-KK-C-41171, Wiring Diagram, JB26, Sheet 2

D-KK-C-41173, Wiring Diagram, JB28

15. Oak Ridge National Laboratory drawing D-KK-C-41172, Electrical Reference Drawing List.

16. Oak Ridge National Laboratory drawings:

E-HH-B-40555, Composite Control Board Layout, Front Elevation

E-HH-B-40563, Main Control Board Detail Layout, Panel 8

E-HH-B-41590, Main Control Board, Panel 8, Wiring Diagram

E-HH-B-41627, Main Control Board, Panel 8, Pneumatic Diagram

17. Oak Ridge National Laboratory drawings:

D-HH-B-40561, Main Control Board, Detail Layout, Panel 6

D-HH-B-41588, Main Control Board, Panel 6, Wiring Diagram

D-HH-B-41625, Main Control Board, Panel 6, Pneumatic Diagram

18. Oak Ridge National Laboratory drawings:

D-HH-B-40642, Composite Transmitter Control Board, Layout, Front Elevation

D-HH-B-41539, Transmitter Control Room, Layout, Panels 5 and 6

D-HH-B-41611, Transmitter Room, Control Panel 5, Wiring Diagram

D-HH-B-41641, Transmitter Room, Control Panel 5, Pneumatic Diagram

19. Oak Ridge National Laboratory drawings:

D-HH-B-41612, Transmitter Room, Control Panel 6, Wiring Diagram

D-HH-B-41642, Transmitter Room, Control Panel 6, Pneumatic Diagram

20. Oak Ridge National Laboratory drawing D-AA-B-40500, Fuel Salt System, Instrument Application Diagram.

21. Oak Ridge National Laboratory drawing D-AA-B-40501, Coolant Salt System, Instrument Application Diagram.

## 4.10 CONTROL INTERLOCK CIRCUITS

The contacts on the relays shown in Figs. 4.1.8 and 4.1.9 are connected in circuits which control valves, motors, and other equipment in the reactor system. Each relay performs one or more of the following functions:

1. contact multiplication,
2. contact action reversal (normally open to normally closed or vice versa),
3. isolation of circuits,
4. isolation of low-rated instrument contacts from high currents and voltage spikes present in some circuits.

The relays are energized by the flow of current through contacts on pilot devices which depend for their operation on various physical effects in the systems. The pilot devices are switches of special form which are caused to function through pressure, temperature, vacuum, position, or some other physical condition. This condition is usually described on the drawings by a short note adjacent to each contact symbol.

The function of each pilot device and relay combination is to control the operation of other equipment so as to maintain some physical condition in a particular system within certain predetermined limits. Every circuit shown is energized when the stated condition is normal; when the condition is abnormal, or rather out of limits, the switch opens and deenergizes the relay.

Several additional pilot devices, one for each relay contact, could have been used in place of the relays, but it is much simpler to use one device to operate a relay which has many separate contacts available for use in other circuits.

The circuits in Fig. 4.1.8 are all connected to one control power bus, which is supplied by the 48-V dc uninterruptable system. Those in Fig. 4.1.19 are energized by a single 110-V ac bus which is supplied by the highly reliable 60-kW static inverter system.

## 4.11 JUMPER BOARD AND RELAY CABINETS

### 4.11.1 Jumper Board

System check-out and tests of various parts of the reactor system, and the nonroutine operations required to conduct experiments, inevitably create conflicts and inconsistencies between operational requirements and prohibitions imposed by the control and safety system. Where such conflicts were foreseen and expected to occur frequently, provisions were made in the design of the control circuits for automatic bypassing with relay contacts or for manual bypassing with contacts on hand-operated switches. However, in an experimental system such as the MSRE, the needs and requirements for future bypassing of interlock contacts are not always predictable, and, while it is conceivable that the flexibility required to cover all possible contingencies could be obtained with hand switches, the cost and complexity of such a system would be prohibitive. It is also possible (and common practice) to provide the desired flexibility by using "clip leads" or wired jumpers to bypass contacts when the need arises. This method is not desirable because the point of installation of the jumper is usually in an out-of-the-way place behind panels, inside relay cabinets, or in field junction boxes, where installation is difficult and easily forgotten.

To provide the desired flexibility for conveniently bypassing interlock contacts and to avoid the problem of the forgotten clip lead, a jumper board has been installed in the MSRE. This jumper board, shown in Fig. 4.11.1, is installed in the main control room and presents a graphic display of the condition of the more important electrical control circuitry as well as a means of jumpering selected interlocks. Figures 4.11.2, 4.11.3, 4.11.4, and 4.11.5 show the layouts of individual board sections. Jumper positions are indicated by concentric circles. Lamps are indicated by circles. Lamps are on when circuit continuity exists to the point at which the lamp is attached. Jumpering is accomplished by inserting a plug into a jack (see below). Although not all of the contacts shown on the jumper board are provided with jumpers, the design of the jumper board is such as to permit the addition of jumpers on any contact shown on the jumper board.

Both control and safety circuit jumpering capability is provided on the jumper board. The use of the jumper board is subject to formal administrative control. Jumpering of safety system circuitry requires the approval of the department head and the chief or assistant chief of reactor operations. Jumpering of control-grade interlocks requires the same approval.

Installation of safety circuit jumpers will prevent, or result in the cessation of, power operation of the reactor (see below).

The design of the jumper board and associated circuitry fulfills design criteria, as follows:

1. Safety circuit isolation and separation are maintained.
2. The jumpers (plugs) are readily visible to supervisory and operations personnel in the main control area.
3. The circuit and its condition (whether or not energized) in each string of contacts is displayed to personnel in the main control area by means of indicating lamps.
4. The presence of a safety system jumper is annunciated.
5. If any safety system contact is bypassed by a jumper, the control system cannot be put in the "operate" mode.
6. Failures of components in the jumper board circuitry will not jeopardize operation of the safety circuits.

Figure 4.11.6 is a diagram showing typical circuitry required to jumper a safety system contact. Actual contact bypassing is accomplished by relays which are energized when plugs are inserted in the board. This diagram is much simplified in that it shows only one relay contact in the safety relay circuit. In an actual circuit there are several contacts, all of which may be wired for jumpers.

Criteria 1, 4, and 5 (above) are satisfied by contacts on the bypassing relay (see Sect. 6.2.1.2).

In such a string of contacts with indicating lamps to show contact condition, the remote possibility exists that the lamps could bypass enough current around an open contact to keep the safety relay operated. This situation requires that the lamp neutral be open, so that the current path through the lamps passes to neutral via the safety relay. All safety-contact indicating lamp circuits contain a dropping resistor and a silicon diode in series with the lamp, so that normal current through one lamp is much less than required to maintain the safety relay operated. In the event of an open lamp neutral, the diodes are back to back in the sneak circuit through the safety relay. A typical silicon diode will pass only a fraction of a milliampere of reverse current. Since relay holding currents are over 100 mA, the relay will not be prevented from dropping out.

Figure 4.11.7 is a diagram of a typical circuit required to jumper a control system contact. In these circuits the consequences of failures are much less severe than in safety circuits, and there is no redundancy to protect. The jumper is connected directly across the interlock, and the silicon diodes and bypassing relay are eliminated. The resistors in series with the lamps are, however, retained to eliminate the possibility of short circuits to ground through the lamps or lamp sockets.

To facilitate fabrication and to provide the capability for future revisions, the MSRE jumper board uses modular construction techniques. The board is composed of a series of vertical strip assemblies mounted on horizontal support strips and covered by plates which are photoengraved to show the circuit schematic. Figure 4.11.8 shows the construction of a typical strip. The front panel, rear panel jumper strip, and rear panel terminal strip of all assemblies are drilled for the maximum number of lamps and jumpers. Hardware and wiring are, however, installed only where required initially, and additions or revisions are made as the need arises.

### 4.11.2 Relay Cabinets

With a few exceptions, all control and safety circuit relays are located in cabinets in the auxiliary control room. To maintain the required separation of control-grade and safety-grade circuits, two cabinets are used. One cabinet contains all the control circuit relays and is designated as the control relay cabinet. The other cabinet is designated as the safety relay cabinet and contains only safety circuit relays. Physical separation is also maintained between redundant safety channels within the safety cabinets.

The relay cabinets also serve as central interconnection points for the main reactor control circuit wiring (see Sect. 7.2).

The physical construction of the control relay cabinet is shown in Fig. 4.11.9. Relays are mounted on both sides of a Micarta board assembly as shown in Fig. 4.11.10. Relay contacts and operating coils are wired directly to plug-in-type terminal blocks* mounted alongside the relays. The terminal block assemblies also serve as interconnection strips. Interconnection wiring

*American Pamcor Inc., Termi Blocks.

is run in troughs between and behind the relays. Figure 4.11.11 is a photograph of one side of the control relay board. This photograph was taken during construction and does not show the full complement of relays or the external interconnection wiring. Part of the internal interconnections were installed when the photograph was taken and can be seen in the photograph. The physical construction of the safety relay cabinet, shown in Fig. 4.11.13, is similar to that of the control relay cabinet. Figure 4.11.12 is a photograph of one side of the safety relay board. This photograph was also taken during construction and does not show the full complement of relays or the external interconnection wiring. The safety relay cabinet differs from the control relay cabinet as follows:

1. It is smaller in size.
2. Barrier-type screw terminal blocks are used instead of plug-in terminal blocks.
3. All interface interconnections are made through terminals at the sides of the cabinet.
4. The board is physically divided to provide separation of redundant channels 1, 2, and 3.

Barrier-type screw terminals were used in the safety cabinet because, at the time the cabinet was designed, there was insufficient experience at ORNL with the more compact and flexible plug-in terminals to satisfy the safety system reliability requirements.

The side terminal strips provided a convenient means of connecting external interconnection wiring and ensured that the required separation of wiring of redundant safety channels (and of control- and safety-grade wiring) would not be inadvertently compromised during field installation by misrouting of external interconnection wiring. The side strips also provided additional terminals for internal interconnections.

The required separation of redundant channels 1 and 2 is obtained by mounting relays associated with these channels on opposite sides of the board. Channel 3 is separated from channels 1 and 2 by mounting the channel 3 relay in a vertical row† at one side of the board and providing a metallic separator between the area assigned to channel 3 and the area assigned to channels 1 and 2.

All external interconnection wiring in both cabinets enters the cabinets from below. Control-grade wiring is run in trays below the cabinets. Safety-grade wiring is run in separate conduits (see Sect. 7.2).

†Right side in Fig. 4.11.12; left side on opposite side of the board.

Except for the inevitable cross-connections required for matrices, all wiring associated with a given safety channel is contained in the space allocated to that channel. Cross-connections between safety channels (required for matrices) are routed in the shortest path possible (usually through the board), so that any possibility of a short circuit to a third channel or to control-grade wiring is eliminated. Due to a shortage of space, much of the internal interconnection wiring in the safety cabinet is routed through conduits across the top of the cabinet.

With a few exceptions, all relays are General Electric type CR-120. This relay is available with either ac or dc coils, and both are used. The basic relay has four double-break contacts, which may be either normally open or normally closed. On dc relays, one of the contacts is used to operate the relay, and only three are available. Contacts are easily removed in the field for service or inspection and are field reversible. The number of contacts may be increased at any time to six or eight by installing contact adder blocks. These relay features and the general design of the relay cabinets provide a flexibility which permits expansion and revision of circuitry with a minimum of effort.

## 4.12 ANNUNCIATORS

### 4.12.1 Introduction

Chapters 2 and 3 of this report describe the many nuclear and process measuring loops utilized in the MSRE. Signals generated by these loops operate recorders and indicators to provide a continuous display of the plant operating conditions. These same signals also activate the annunciator system to alert the operator when any measurement exceeds a predetermined limit. Many control and safety circuit relay operations, manual as well as automatic, which are described in other sections of Chap. 4, are also annunciated. When an off-limits condition or circuit operation occurs, the annunciator produces an audible and visual alarm which the operator must recognize by pressing a push button on the main control board. This is the only way the audible alarm can be silenced. In many instances the alarm is an advance warning that, if the trend of the measured variable is allowed to continue, control or safety system interlocks will be actuated to change the operating status of the plant. Usually the operator will have time to reverse the trend or take some other positive action before the interlocks actually operate.

Most of the annunciator units are mounted on top of the instrument panels in the main[1] and auxiliary[2]

control rooms (see Fig. 1.3.2), but a few are located on field panels for auxiliary systems such as the fuel processing system,[3] the fuel sampler-enricher system,[4] the temperature scanner system,[5] and the reactor cell vapor suppression system (see ORNL-TM-729,[20] Fig. 1.3.1). Another group of annunciator units is mounted in the face of auxiliary boards AB3[6] and AB4.[7]

### 4.12.2 Component Description

Four different types of annunciator chassis are used in the MSRE system. They are the Tigerman Engineering Company model 440TL Tel-Alarm, the Panellit Corporation series 51 Panalarm, the Rochester Instrument Company model SM-110 (modified), and the Electra Systems Corporation Operations Monitor System.

The Tel-Alarm chassis shown in Fig. 4.12.1*a* are used on all 12 of the main board panels and on all of the field panels except those for the vapor suppression system. The unit has six visual elements with individual back-lighted turret-type lenses. The top half of each lens is red, the bottom half is white. The variable being monitored is identified by an engraved Lamacoid tag under each lens. The lamps in each element as well as the audible alarm are controlled by a model 416NCL plug-in relay unit. A typical relay circuit for a single annunciator point in a Tel-Alarm chassis is shown in Fig. 4.12.2.

When operating conditions are normal, the field contact in Fig. 4.12.2 is closed, and the lamps, both red and white, are dimly lit. If the operating condition becomes abnormal (off limits), the field contact opens to operate the relays, the red and the white lamps burn brightly, and the R bus is energized to sound an audible alarm. The operator must acknowledge the abnormal condition by momentarily opening the "acknowledge" push-button switch. When this switch opens, the audible alarm is turned off, and the white light on the lower half of the turret lens goes out. The annunciator will hold this condition as long as the field contact remains open. Once this contact closes, the annunciator may be returned to the normal operating condition by momentarily opening the "reset" push button. The complete operating sequence is tabulated in Fig. 4.12.2. Refer to specification MSRE-176[8] for further details.

The Panalarm series 51 chassis shown in Fig. 4.12.1*b* is used on the auxiliary boards and the nuclear boards in the auxiliary control room. This chassis is very similar to the one just described, but there are some significant differences. Each chassis has only five visual elements with individual flush-mounted rectangular-shaped plastic lenses. Each lens is all white and is engraved with black letters which identify the monitored variable. The lamp in each element and the audible alarm are controlled by a model 50 NC plug-in relay unit. A typical relay circuit for a single annunciator point is shown in Fig. 4.12.3. The field contact, operated by a relay or a process variable, is closed for normal operating conditions, the lamp is out, and the audible alarm is silent. When operating conditions become abnormal (off limits), the contact opens, the audible alarm sounds, and the lamp for that unit only comes on flashing. The flashing light is controlled by the flasher motor, which is a plug-in unit the same as the alarm relay. Each five-point chassis has one flasher motor. To silence the audible alarm, the operator must acknowledge the abnormal condition by momentarily opening the "acknowledge" push button. This also stops the flasher motor, but the lamp will continue to burn bright and steady as long as the field contact remains open. There is no reset feature on this type of unit, and the lamp will go out automatically when conditions return to normal and the field contact closes again. All lamps connected to the C bus may be tested by opening the "lamp test" push button. When the push-button switch is open, the lamps should burn brightly. If any do not, the lamp bulbs need to be replaced. The complete operating sequence is tabulated in Fig. 4.12.3. Refer to specification MSRE-174[9] for further details.

The Rochester model SM-110 (modified) chassis (refer to specification MSRE-175)[10] are all mounted in the face of auxiliary boards AB3[6] and AB4.[7] This type of chassis is entirely different from the two previously described. Each chassis contains only two independent alarm points, but the units are much smaller, and six chassis containing 12 alarm elements will fit into a single $6\frac{1}{2} \times 24$ in. panel as shown in Fig. 4.12.4. Twenty-four chassis containing 48 alarm elements are mounted in AB3. Eighteen chassis containing 36 alarm elements are mounted in auxiliary board AB4.

Two toggle switches and two lamps, one set for each alarm element, are mounted in the face of each chassis. The variable being monitored is identified by an engraved Lamacoid tag mounted under each lamp-switch combination. The lamps are controlled by separate relay circuits which require a 28-V dc power source as shown in Fig. 4.12.5. Power is furnished by two supplies; one is manufactured by the Rochester Company and the other is an ORNL model Q-880-59.[11] The 24 chassis mounted in AB3 are

connected in parallel to one power supply, and the 18 chassis mounted in AB4 are connected to the other.

The operation of the circuit controlling lamp L1 and relay K1 is typical since the two circuits shown in Fig. 4.12.5 are identical. Switch S1 has three positions – "operate," "reset," and "disable." With the circuit as shown, S1 is in the "operate" position, the power supply is on, but lamp L1 and relay K1 are both deenergized. The condition of the process variable is normal (not out of limits); therefore the field contact is closed. The circuit is placed in its normal operating mode by moving the switch to the "reset" position momentarily and then returning it to the "operate" position. In the "reset" position the S1 contact closes, and normally open contact K1A is bypassed. This connects lamp L1 and relay K1 to the 28-V dc power bus. Relay K1 energizes, and contacts K1A and K1B close. When S1 is returned to the "operate" position, lamp L1 and relay K1 both remain energized by the flow of current through the field contact and the seal-in contact K1A. The lamp L1 burns brightly. Contact K1B is connected in series with similar contacts in other Rochester units, and the series circuit thus formed is used to control an annunciator element on the main board. This feature will be described in greater detail in the following section.

If the process variable becomes abnormal, the field contact opens. This deenergizes lamp L1 and relay K1, the lamp goes out, contacts K1A and K1B open, and the alarm sounds. The operator now has two choices. First, switch S1 is placed in the "reset" position, and if the field contact has returned to the closed position, the circuit elements will return to their normal operating condition in the manner just described. On the other hand, if the field contact does not return immediately to the closed position, the circuit will not reset, and the operator may choose to disable it, that is, prevent further annunciations. The circuit is disabled by placing switch S1 in the "disable" position. With the switch in this position, both the relay K1 and the lamp L1 are energized by the flow of current from terminal 5 through resistor R5, and the relay will remain energized regardless of the condition of the field contact. As long as the field contact remains open, lamp L1 burns dimly, but when it closes, lamp L1 will burn brightly, and switch S1 may be returned to the "operate" position for normal operation. This feature is used to good advantage with field contacts operated by process variables which have no immediate effect on the operating condition of the reactor and allow the operator some time to investigate the cause of the abnormal condition. The complete sequence of operations for all conditions is described by the tabulation in Fig. 4.12.5.

The Electra Systems Corporation Operations Monitor System[16] is described in Sect. 6.15 of this report. A system consists of ten temperature-operated switch modules mounted in a single enclosure plus a power supply unit which provides power and a reset function to the switch modules. A typical system is shown in Fig. 6.15.1. The reset function is either manual or automatic. When the auto-manual reset switch on the front panel of the power supply is in the "auto" position, the system will be automatically subjected to the reset function whenever any module goes into the alarm condition. Reset occurs at approximately 5-sec intervals until either the out-of-limit condition is corrected or the auto-manual reset switch is turned to the "manual" position. When the switch is in the "manual" position, the system is subjected to the reset function only when the "reset" push button is depressed. Ten complete systems, TX-3001 through TX-3010 (see ORNL specifications MSRE-103,[17] MSRE-104,[18] and MSRE-108[19]), are used in the MSRE. All ten systems are mounted in auxiliary panelboards AB5[14] and AB6.[15]

Two types of switch modules are used in the MSRE temperature monitoring system. One type is the model FT-4200 alarm module shown in Fig. 6.15.3. The other type is the model ET-4300 control module shown in Fig. 6.15.4. The major difference between the two types is that the control module does not depend on the reset function but operates in a manner similar to an on-off controller; that is, the switch contacts alternately open and close automatically as the input signal crosses the control set point. On the other hand, when the alarm module input signal is off limits, the switch contacts open and remain open until the off-limit condition is corrected and the module is reset either manually or automatically. The two types are used interchangeably in any of the ten enclosures.

The output from each module is used to operate a relay which serves as an interface between the module and external circuits. The relays are mounted in the same enclosure as the switch modules, and their coils are energized when the temperatures being monitored are within preset limits and are deenergized when the limits are exceeded. The mercury-wetted relay contacts are connected to operate annunciator and control circuits.

A lamp on the front panel of each switch module glows dimly when the system is operating properly and the input signal is within the preset limits. When the signal is out of limits, the lamp glows at full brilliance.

A metal tag embossed with the switch identification number is attached to the front panel of each module.

The power supplies for two of the operations monitor systems, TX-3001 and TX-3003, are equipped with an additional feature called the master alarm. The master alarm is a common alarm for all alarm modules in a single system. (The model ET-4300 control modules do not activate the master alarm.) Red and amber-colored lamps mounted on the front of each of the two power supply panels indicate the existence of high and/or low alarm conditions. The lamps glow dimly when all channels are in the normal condition and burn at full brilliance when any one or more of the modules is out of limits. The master alarm circuity also produces an output voltage (18 V at 100 mA dc) which is used to operate an external relay. Contacts on the two relays, labeled TX-3001 and TX-3003 in Fig. 6.15.6, are used to actuate main board annunciator elements. This operation is described further in Sect. 4.12.3.

Monitor systems TX-3002 and TX-3004 through TX-3010 are all operated in the automatic reset mode. Most of the switch elements are model ET-4300 control modules[19] which are used as automatic control interlocks in the freeze valve control circuits (see Sect. 4.3). A few, some of which are connected directly to main board annunciator elements (see circuits 892 and 893, Fig. 4.1.52), are model ET-4200 alarm modules,[17] but they open and close automatically the same as any other process instrument switch. None of the above systems or groups of modules are connected to operate a common alarm in the main and auxiliary control rooms.

### 4.12.3 System Description and Operating Characteristics

The MSRE annunciator system is designed so that every open field contact ultimately produces an audible and visual alarm in the main control room which the operator is required to acknowledge. Since there are approximately 265 individual annunciator points in the system, the operator could be overwhelmed by sheer numbers; therefore the annunciator arrangement used minimizes the number of points actually located in the main control room and presents information in a manner that enables the operator to quickly identify the process variable that is producing the alarm. The annunciator system and its operating characteristics are illustrated by the simplified wiring diagram shown in Fig. 4.12.6.

The field contacts that initiate the alarms fall into two general categories: one is comprised of those contacts connected directly to annunciator elements located in the main control room, and the other is comprised of those connected to annunciator elements located on auxiliary panels. The operation of contacts in the first category generally alerts the operator when abnormal conditions develop in those systems which exert a direct and immediate influence on the operating state of the reactor. Usually the operator must act immediately to correct the condition if normal operation is to be maintained. There are about 84 annunciator elements located on the main board. Sixty-six fall into the first category. The remaining 18 elements simply direct the operator to 18 groups of annunciator elements in the second category. There are approximately 181 individual annunciator elements operated by field contacts in this second category.

Temperature switch TS-OFT-6A and relay contact K22A, both connected to main board annunciator chassis XA-4013, as shown in Fig. 4.12.6, are typical examples of alarm contacts in the first category. When the pressure in the fuel pump bowl exceeds 25 psig, relay K22 deenergizes, and contact K22A opens circuit 1092 (see Fig. 4.1.58). The red-and-white turret lens in the Tigerman annunciator element lights up on the main board, and the audible alarm connected to the R bus at XA-4000 sounds. The operator must open the "acknowledge" push button to silence the audible alarm. The R buses of all annunciator chassis mounted on the main board are connected together and act as a single unit to operate one audible alarm. The same is true for the "acknowledge" and "reset" push buttons connected to the common C buses and K buses respectively. Figures 4.1.52 and 4.1.58 are elementary wiring diagrams of all field contacts connected directly to main board annunciators.

Contacts K1060A, K1074A, and K1036A, all connected as shown in Fig. 4.12.6 to separate elements in main board annunciator chassis XA-4010, are typical examples of alarm contacts in the second category. When one of these contacts opens to activate a single annunciator element on the main board, the operator is directed to a particular group of annunciator elements located in the auxiliary control room or on a field panel. For example, assume that relay contact K1060A opens circuit 855 and activates the main board annunciator. This informs the operator that one of the process radiation monitors is indicating high activity and also directs him to the group of annunciator elements in chassis XA-4042 and XA-4043, which are mounted on nuclear boards NB3 and NB4 in the auxiliary control room. At this point the operator presses the "acknowledge" push button located on the console

(MB13)[12] to silence the main board audible element and proceeds to the auxiliary control room to obtain more specific information. The audible alarm energized by the annunciators in the auxiliary control room (see circuit 917, Fig. 4.12.6) continues to sound. A glance at NB3 and NB4 reveals a flashing light behind one of the lenses in chassis XA-4042 and XA-4043. In this case assume that it is element 1 in chassis XA-4042 (see circuit 1055). This tells the operator that high radioactivity exists in the main cooling water return line 827 at the point where three identical radiation detectors RE-927A, B, and C are located (see Fig. 3.8.0). Another glance at the lamps and indicators on the three radiation monitors RM-827A, B, and C, mounted in NB3 will enable the operator to identify the one or more elements transmitting the out-of-limits radiation signal. Once the source of the alarm is identified, the operator presses the annunciator "acknowledge" push button mounted in auxiliary board AB1[13] to deenergize circuit 917 and silence the audible element. The lamp in element 1 of chassis XA-4042 will stop flashing but will continue to burn brightly until all field contacts in circuit 1055 close again.

Two types of process radiation monitors operate annunciator field contacts. One is an ORNL Q-1916 logarithmic response gamma radiation monitor[14] and the other is an E-H Research Laboratories model 202 electrometer.[14]

A meter on the front panel of the model Q-1916 indicates the level of radiation, and to the right of the meter a neon lamp burns brightly when the alarm set-point level is exceeded. Relay contacts in the monitor are used in annunciator and control circuits. The relay coil is energized during normal in-limit operation, and the contacts are closed, but it deenergizes and opens the contacts when the radiation level exceeds the preset limits. The relay automatically resets and closes the contacts again when the radiation level returns to normal. The annunciator points actuated by contacts in the model Q-1916 monitor cannot be returned to the normal operating condition until the relay resets.

A meter-relay unit on the front panel of the model 202 electrometer not only indicates the level of radiation measured but also has an adjustable high-limit set point that controls an auxiliary relay circuit. Contacts on the relay are used in the annunciator and control circuits. The relay is energized during normal in-limit operation but deenergizes when the radiation level exceeds the preset limit and opens the contacts used in the annunciator and control circuits. The contacts will remain open and maintain the alarm condition on the annunciator until the radiation level returns to normal and the operator presses the "reset" push button on the front panel of the electrometer. Radiation monitors RM-827A, B, and C are model 202 electrometers.

All annunciator elements in the chassis that have their R buses connected together form a single group. For instance, the R terminals on the two chassis mentioned above, XA-4042 and XA-4043, are interconnected; therefore all ten elements in these two chassis form a single group. Relay K1060 is connected to this common R bus and the neutral bus as shown in Fig. 4.12.6. If any one of the ten elements in the two chassis is activated by an open field contact, the R bus and relay K1060 are energized. Contact K1060A opens in circuit 855 to activate the main board annunciator, and at the same time contact K1060B closes in circuit 917 to energize the audible alarm element in the auxiliary control room. Relay K1074 operates in the same manner to produce an alarm on the main board when any one of the group of 15 elements in chassis XA-4020, XA-4021, and XA-4022 is activated by an open field contact. The same applies to relay K1036, which is energized by one of the group of six elements in chassis XA-4053 mounted on the temperature scanner panel TSP1.[5] Each group of annunciators located on field-mounted panelboards is equipped with an audible alarm, a "reset" push button, and an "acknowledge" push button. These are also shown in Fig. 4.12.6. Figures 4.1.53 and 4.1.47 are elementary wiring diagrams of all field contacts connected to annunciator elements mounted on top of the auxiliary and nuclear panelboards. Figures 4.1.56, 4.1.59, 3.12.1K, and 3.13.5 are elementary wiring diagrams of all field contacts connected to chassis located on field-mounted panelboards.

The annunciator field contacts connected to the Rochester Instrument Company chassis in auxiliary boards AB3 and AB4 also fall into the second category; that is, the information conveyed must be acknowledged immediately, but the condition probably will not require immediate corrective actions. There are 84 individual annunciator elements in the Rochester system. These are divided into six groups as shown in Fig. 4.12.6. Each group is connected to a single alarm element on the main board, and this element is activated if one or more of the Rochester elements in the group is in the alarm mode. It was previously explained in Sect. 4.12.2 that each Rochester annunciator element operates an auxiliary relay contact that is connected to a main board annunciator. The connec-

tion is illustrated by the wiring diagram for chassis XA-4026 and XA-4027 in Fig. 4.12.6. The auxiliary contacts in each of the elements in this group are connected in series, and this series circuit is connected to element 3 (circuit 862) in main board annunciator chassis XA-4000. Both the field contacts and the auxiliary relay contacts in the Rochester elements remain closed if operating conditions are normal. If one field contact in the group opens, the corresponding auxiliary relay contact in the series string also opens, and the main board annunciator is activated. As in previous examples, the operator presses the main board "acknowledge" push button to silence the audible element. The operator then proceeds to auxiliary boards AB3 and AB4 and glances at chassis XA-4026 and XA-4027. Any element with a dark lamp and switch S1 in the "operate" position is in the "alarm" condition. After the element causing the alarm is identified, the operator moves switch S1 to the "reset" position momentarily and then returns it to the "operate" position. If the field contact has returned to the normal operating position (closed), the lamp will burn brightly to signify that the element is again in the normal operating mode; if not, the lamp remains dark, and the operator may choose to place switch S1 in the "disable" position. When switch S1 is in the "disable" position, the auxiliary relay contact in the Rochester element closes, and the lamp burns dimly as described previously in Sect. 4.12.2. The Rochester element is now inoperative, but the continuity of the series string of contacts connected to the main board annunciator is maintained, and the other Rochester elements in the group remain in service. The ability to maintain the continuity of the series circuit, even when one or more annunciator elements are disabled, is the main advantage gained by using the Rochester-type elements. The lamp-switch combination, mounted on the auxiliary boards in plain view of the operator, also serves as a constant reminder that one or more annunciator elements are out of service.

Figures 4.1.54 and 4.1.55 are elementary wiring diagrams of all field contacts connected to the Rochester-type annunciator chassis.

Thermocouples connected to alarm modules in the Electra Systems Corporation temperature monitor TX-3001[17] transmit signals proportional to temperatures at the freeze flanges and the reactor access nozzle. Thermocouples connected to the two alarm modules in temperature monitor TX-3003[17] transmit signals that are proportional to temperatures at the radiator annulus ducts. If any temperature signal to either of the two monitors exceeds the preset limits, the module will switch to the "alarm" state, the lamp in the front panel of the module will glow at full brilliance, and the master alarm in the system containing the module will energize one of the external relays, TX-3001 or TX-3003. The two relays are connected to the power supply units as shown in the extreme right of Fig. 4.12.6. For example, assume that one of the temperature signals from the radiator annulus duct is out of limits and alarm module TS-AD3-5B switches to the "alarm" state. The lamp in module TS-AD3-5B will glow at full brilliance, and relay TX-3003 will be energized. The contact operated by TX-3003 is connected to main control board annunciator circuit 857 as shown in the left-hand portion of Fig. 4.12.6. The contact opens and activates the main board annunciator. When this occurs, the operator silences the main board audible alarm and proceeds to auxiliary board AB5, where he observes two lamps – a bright red and/or bright amber-colored lamp on the front panel of power supply unit TX-3003. The lamp in module TS-AD3-5B, which is beneath the power supply unit, will also be burning brightly. If the automatic-manual reset switch is in the "auto" position, the module will automatically return to the normal state when the input signal returns to normal. If the switch is in the "manual" position, the operator must wait until the lamp in the module goes dim and then press the "reset" push button to return the module to the normal operating state.

The modules and the relays connected to TX-3003 operate in an identical manner to actuate main board annunciator circuit 857.

## References


1. ORNL drawing E-HH-B-40555 – Composite Control Board Layout, Main Board, Front Elevation.
2. ORNL drawing D-HH-B-40644 – Auxiliary Control Panelboard, Composite Layout.
3. ORNL drawing D-NN-F-55459 – Chemical Processing System, Control Panels, Front View.
4. ORNL drawing D-HH-Z-49553 – Fuel Processing Sampler, Control Board, Composite Panel Layout.
5. ORNL drawing D-HH-B-41658 – Thermocouple Scanner, Panel 1 – Layout; ORNL drawing D-HH-B-41661 – Thermocouple Scanner, Panel 2 – Layout.
6. ORNL drawing D-HH-B-40571 – Auxiliary Control Panelboard, Panel 3 – layout.
7. ORNL drawing D-HH-B-40572 – Auxiliary Control Panelboard, Panel 4 – Layout.
8. ORNL specification MSRE-176 – Annunciator, Tigerman Engineering Co.

9. ORNL specification MSRE-174 – Annunciator, Panellit Corp.

10. ORNL specification MSRE-175 – Annunciator, Rochester Instrument Co.

11. ORNL drawing Q-880-59 – Power Supply, 28-V dc.

12. ORNL drawing D-HH-B-40568 – Main Control Panelboard 13, Detail Layout.

13. ORNL drawing D-HH-B-40569 – Auxiliary Control Panelboard, Panel 1 Layout.

14. ORNL drawing D-HH-B-41789 – Auxiliary Control Panelboard, Panel 5 Layout.

15. ORNL drawing D-HH-B-41790 – Auxiliary Control Panelboard, Panel 6 Layout.

16. Electra Systems Corp., Fullerton, Calif. *Operations Monitor System Instruction Manual No. ETI-4000,* rev. 1 (April 1963).

17. ORNL specification MSRE-103 – Temperature Alarm Switch, Model ET-4200.

18. ORNL specification MSRE-104 – Temperature Alarm Switch, Power Supply.

19. ORNL specification MSRE-108 – Temperature Alarm Switch, Model ET-4300.

20. J. R. Tallackson, *MSRE Design and Operations Report, Part IIA, Nuclear and Process Instrumentation,* ORNL-TM-729, Part IIA, pp. 351–66 (February 1968).

## 4.13 INSTRUMENT POWER DISTRIBUTION

### 4.13.1 General Description

Electrical power is distributed to the MSRE instruments and control circuits through seven circuit-breaker-type distribution panels as shown by the simplified one-line diagram of Fig. 4.13.1. The panels are divided into three groups, and each group receives power from one of three practically independent sources within the distribution system. These three sources are identified as follows:

1. Reliable ac system.
2. TVA-diesel system.
3. 48-V dc system.

All three sources are designed to operate continuously for long periods with a high degree of reliability and little attention. For normal operating conditions the three sources are supplied from the Tennessee Valley Authority (TVA) system, but two of them, the reliable ac source and the 48-V dc source, are not totally dependent on this system, and their output to the instruments and control circuits will continue uninterrupted when the TVA system supply fails.

The need for a highly reliable, uninterrupted supply of instrument system power is dictated by the philosophy governing the operation of the reactor and the design of the control and safety circuits. A comprehensive discussion of this philosophy is given in ORNL-TM-729, Part IIA.[7] In general, the philosophy provides a strong incentive to maintain continuous operation at the MSRE; therefore, the plant and the instrumentation and control system are designed to minimize unscheduled shutdowns caused by equipment failures and electrical power (TVA) interruptions. Such interruptions are a leading cause of plant shutdowns, and the design of the MSRE assumes that TVA-supplied electrical power will be interrupted several times a year by thunderstorms alone.

If the reactor is operating at full power when a TVA system outage occurs, the rods and the load are scrammed, but total shutdown, which is defined to mean a reactor drain, is not immediate. Freeze valve FV103 in line 103 begins to thaw because the component cooling air blowers are out of service, but about 10 min is required for the valve to thaw. The normal procedure following a loss of TVA power is to obtain emergency power by starting the diesel generators. Once the generators are in operation, the supply of cooling air for FV103 can be restored before it thaws completely, criticality can also be restored, and the reactor can then operate at the heat loss power level indefinitely until TVA power is again available.

The control circuits, safety circuits, and instrument systems operate to produce shutdown conditions when deenergized, even momentarily. Therefore, it should be obvious that the above procedure would be impossible unless the supply of power to essential plant controls and instruments is maintained when TVA outages occur. Other advantages are gained by having high-quality independent power sources which serve instrument and control circuit loads only. Most instruments perform better when the applied ac voltage wave is sinusoidal and has a constant amplitude. The output from the dc supplies is very stable – another requirement for good performance. Independent power sources are also free from transients with voltage spikes and dips. When present, these effects can cause spurious operations in the instruments and control circuits which lead to undesirable interruptions in the normal operation of the reactor system.

The TVA distribution system and associated equipment are described in ORNL-TM-728, Part I.[12] The rest of this section describes the systems that supply

electrical power to the instruments and control circuits.

### 4.13.2 Reliable AC System

**4.13.2.1 Power supply equipment.** Instrument power distribution panels IPP2, IPP3, IPPA3, and IPPA6 are normally energized by the reliable ac power supply as shown in Fig. 4.13.1. The panels can be supplied from either one of two sources, the 62.5-kVA static inverter or TVA motor control centers 3 and 4, depending on the positions of automatic transfer switches 1 and 2. Normally the panels are connected to the static inverter, but if the output from that source fails, switch 1 automatically transfers the connection to the motor control centers through transfer switch 2. Transfer switch 2 normally connects the panels to motor center 4, but if motor control center 4 deenergizes, the switch automatically transfers the connection to motor control center 3. Such transfer operations are not expected to occur very often, but when they do occur, the switching operation will cause a momentary power interruption. Some control circuits will undoubtedly deenergize and perturb the operation of the reactor, but the quick restoration of power (the switching operation is completed in ¼ to ½ sec) to vital instruments and controls will minimize the perturbation and perhaps enable the operator to restore normal operating conditions for a reasonable time at least.

The static inverter, manufactured by the Westinghouse Electric Corporation,[1] has a full load capacity of 62.5 kVA. It is constructed entirely of solid state components which have no moving parts and is considered to be a highly reliable device. It requires a 250-V dc supply and has a three-phase, four-wire output circuit configuration. This configuration provides 120-V single-phase ac and 208-V three-phase ac outputs at a frequency of 60 Hz ± 0.1%. The output voltage regulation is ±1% from no load to full load.

The input terminals of the static inverter are connected to the 250-V dc distribution panel, which is energized by the 125-kW motor-generator set No. 1 and a battery. When the TVA main distribution bus is energized, the 250-V dc panel is supplied by the motor generator. The battery remains connected to the panel at all times and is kept fully charged by the generator output. If the output from the generator is lost because of a TVA power failure or for any other reason, the battery will continue to supply power to the 250-V dc panel and the static inverter without interruption for at least 2 hr. A complete description of motor-generator set No. 1, the battery, and associated equipment is given in ORNL-TM-728, Part I.[10] The location of the major components in both the 250-V and the 48-V dc systems is shown on drawing D-KK-C-55106.[2] The 48-V dc system is described later in this section.

Audible and visual alarms sound in the auxiliary and main control rooms if any one of the following conditions develops:

1. Malfunction of components in 62.5-kVA static inverter[1] (see circuit 900, Fig. 4.1.53).
2. Generator No. 1 (250-V dc) load circuit breaker open (see circuit 899, Fig. 4.1.53).
3. Low output voltage from 62.5-kVA static inverter (see circuit 896, Fig. 4.1.53).

**4.13.2.2 Distribution panels and circuits.** Instrument power distribution panels IPP2, IPP3, and IPPA3 are mounted on the south wall of the auxiliary control room, which is near the locations of most of the instruments and control circuits and is within easy reach of the operators and maintenance personnel. The panels are constructed with two 100-A main buses and a solid neutral bus which is grounded. They are designed for use on 120/240-V single-phase distribution systems. Each panel has space for 20 single-pole circuit breaker elements. Wiring diagrams for all of the instrument power distribution panels are listed in ref. 3. The loads – such as instrument components, relay circuits, and valve circuits – served by each circuit breaker in each panel are identified in Figs. 4.13.2 and 4.13.3.[4]

*IPP2.* Except for the channel 1 safety-grade input circuits, panel IPP2 supplies power to control-grade circuits for equipment that is essential to normal reactor operations. This equipment includes freeze valves, rod drive controls, load controls, and others as listed in Table 4.13.1. The distribution of power to these circuits is straightforward and requires no further explanation here. The term "channel 1 safety circuits" refers to one of the three redundant input signal relay circuits employed extensively in the design of the plant safety system. The plant safety system and a typical example of three-channel redundant design are discussed in ORNL-TM-729, Part IIA.[13] Other examples, shown in Figs. 4.7.2.2 and 4.8.3, are described in this report, Sects. 4.7.2.2 and 4.8.3. In these examples, each of the three input relay circuits is energized from a separate power source. Since any two of the three relays must deenergize to activate the safety system, the use of redundant power sources enhances the reliability of the two-of-three configuration; that is, the loss of a single power source will not activate the safety system. Channel 2 safety circuits are energized from the

Table 4.13.1. Reliable ac system power distribution

| |
|---|
| **IPP2** |
| 1.[a] Safety circuits, channel 1. |
| 2. Rod drive control circuits. |
| 3. Freeze valve control circuits. |
| 4. Radiator load control circuits. |
| 5. Instrument air compressor motor control circuits. |
| 6. Lube oil pump motor control circuits. |
| 7. Annunciators. |
| 8. Fuel sampler-enricher and coolant sampler. |
| 9. Fuel process system control circuits. |
| 10. Communications system. |
| **IPP3 and IPPA3** |
| 1. Safety system instruments, channel 1. |
| 2. Freeze valve control instruments. |
| 3. Fuel and coolant salt temperature, level, and flow instruments. |
| 4. Fuel sampler-enricher instruments. |
| 5. Lube oil system instruments. |
| 6. Nuclear control instruments, channel 1. |
| **IPP6** |
| 1. Computer–Data Logger. |

[a]These item numbers are not related to distribution panel circuit breakers or circuit numbers. Actual circuits are shown on drawings E-HH-Z-41695 and -57412 (ref. 4).

TVA-diesel system through IPP4, while the channel 3 safety circuits are supplied from the 48-V dc system through IPP1.

It is important to note at this point that the channel 1 safety relay circuits and the channel 1 safety-grade instrument components, whose contacts operate in the channel 1 relay circuits, are both supplied from the same instrument power source – the reliable ac system. These components are supplied through circuit breaker 10 in IPP3. The same arrangement is used in the channel 2 and channel 3 safety systems.

*IPP3 and IPPA3.* A glance at Fig. 4.13.2 will show that the majority of all instrument components, both safety and control grade, receive power from instrument power panel IPP3. The notable exceptions are the two groups of instruments associated with safety system channels 2 and 3, which are connected to instrument power panels IPP4 and IPPA1.

The undervoltage relays UVR2 through UVR6 are a special feature of circuit 10 in IPP3. Circuit 10 is the input to a power supply with five 65-V dc output circuits. The 65-V dc circuits are power supplies for the Foxboro Instrument Company ECI components (see Sect. 5.2.2) used in safety system channel 1. These measuring components produce the signals that operate the ECI switch components which receive their power from circuits 3 and 4 in IPPA3. Contacts operated by these switch components are used as interlocks in the channel 1 safety circuits. If the output of the power supplies should fall below 60 V dc, the measurement of conditions in the reactor system would be in error, and the operating set points of the switches would shift to unknown values. This condition may not be apparent to the operator and could lead to serious consequences. Such a condition is prevented by the undervoltage relays (UVR). If the power supply output falls below 60 V dc, the relays deenergize, their contacts open, and the Foxboro switch components are deenergized. All contacts operated by these components open and deenergize the safety circuits in which they are connected. All safety circuits produce safe conditions when deenergized. The undervoltage relays will not energize again until a minimum of 60 V dc is applied. An identical relay, UVR1, is applied in the same way in circuit 3 of IPP4, which supplies power to instrument components in safety channel 2.

*IPP6.* IPP6 is a three-phase, four-wire circuit-breaker-type distribution panel that serves both 120-V single-phase and 208-V three-phase loads as required by the computer data logger system. These loads are shown on Fig. 4.13.3. The panel is normally supplied from the 62.5-kVA static inverter through a manual transfer switch as shown in Fig. 4.13.1, but if necessary, the connection can be transferred to the TVA-diesel instrument power source. Panel IPP6 and the transfer switch are both mounted on the north wall of the data room.

### 4.13.3 TVA-Diesel System

**4.13.3.1 Power supply equipment.** Instrument power distribution panels IPP4, IPPA4, IPP5, and IPP7 are connected directly to the TVA system through diesel generator buses 3 and 4 as shown in Fig. 4.13.1. This system is not served by a battery-powered auxiliary source, and the supply of power to all of the panels will be interrupted for a short time if a TVA outage occurs. Diesel generators 3 and 4 are available for standby service, but 5 to 10 min is required to get them in operation. The loads supplied by this system are listed in Table 4.13.2. All except two, which will be discussed below, can tolerate short-term power outages without serious consequences.

Panels IPP4, IPPA4, and IPP5 are all mounted on the south wall of the auxiliary control room. IPP7 is located on the northeast wall of the high-bay area.

**4.13.3.2 Distribution panels and circuits.** *IPP4 and IPPA4.* Distribution panel IPP4 receives power from

Table 4.13.2. TVA-diesel system power distribution

| IPP4 and IPPA4 |
|---|
| 1.[a] Safety circuits, channel 2. |
| 2. Safety instruments, channel 2. |
| 3. Thermocouple scanners. |
| 4. Remote maintenance television. |
| 5. Nuclear control instruments, channel 2. |
| 6. Recorders and recorder chart drives. |
| 7. Instrument cabinet lighting. |
| **IPP5** |
| 1. Health physics instruments. |
| 2. Fuel sampler-enricher maintenance and operational valves. |
| **IPP7** |
| 1. Fuel sampler-enricher vacuum pump motor. |
| 2. Fuel sampler vacuum pump motor. |
| 3. Coolant sampler vacuum pump motor. |
| 4. Off-gas sampler. |
| 5. Beryllium monitor. |

[a]These item numbers are not related to distribution panel circuit breakers or circuit numbers. Actual circuits are shown on drawings E-HH-Z-41695 and -57412 (ref. 4).

motor control center 3 through a 10-kVA single-phase transformer. Most of the circuits served by IPP4 are connected directly to circuit breakers in that panel as shown in Fig. 4.13.2, but some require a regulated voltage source, and these are connected to distribution panel IPPA4. IPPA4, in turn, receives power from panel IPP4 through a Sola harmonically neutralized sine-wave constant-voltage transformer. Both distribution panels are designed for use with 120/240-V single-phase, three-wire grounded-neutral-type distribution circuits.

Two of the circuits that are normally energized from panel IPP4 are automatically transferred to an alternate source of power when the supply from IPP4 fails. One of these is the temperature scanner circuit, which is connected to circuit breaker 6 through relay contact KBIPP4A as shown in Fig. 4.13.2. The temperature scanner circuit is also connected to circuit breaker 3 in instrument panel IPP3 through relay contact KBIPP4B. When power is available from IPP4, relay KBIPP4 is energized, contact KBIPP4B is open, contact KBIPP4A is closed, and the temperature scanner receives power from IPP4. If this power source fails, the relay deenergizes, the contact positions reverse, and the temperature scanner circuit connection is automatically transferred to IPP3 with only a momentary interruption of its supply of power. The other is the circuit which supplies power to all of the recorders, recorder chart drives, and the computer data logger clock. Normally it is connected to circuit breaker 5 in IPP4, but the connection is automatically transferred to circuit 5 in IPP3. This is accomplished by a relay contact interlock arrangement identical to the one just described.

The loss of the safety channel 2 instruments and circuits is tolerated here on the basis that a single safety input channel will not initiate safety system operations. The other two safety channels are supplied from separate battery-powered sources and would presumably remain energized when the power from IPP4 is lost.

*IPP5.* IPP5 is a three-phase, four-wire circuit-breaker-type distribution panel that is designed to serve both 120-V single-phase and 208-V three-phase loads. It receives power from motor control center 3 through an induction voltage regulator and 30-kVA step-down transformer. The health physics instrument systems (see ORNL-TM-729, Part IIA, Sects. 2.9 and 2.11)[14] are supplied by the 120-V single-phase circuits. The motors that drive the fuel sampler-enricher maintenance and operational valves are supplied by the 208-V three-phase circuits (see Sect. 3.17.1 of this report).

*IPP7.* Panel IPP7 receives power from motor control center 4 through a 25-kVA single-phase step-down transformer. It provides power for instruments and control elements located in the north end of the high-bay area and in the vent house. These include the off-gas sampler system, the beryllium monitor, and control circuits for the vacuum pumps serving the fuel sampler-enricher and coolant sampler systems.

### 4.13.4 48-V DC System

**4.13.4.1 Power supply equipment.** Instrument power distribution panels IPP1 and IPPA1 are supplied from the 48-V dc bus, which is also shown in Fig. 4.13.1. The bus is energized by two 3-kW diverter-pole motor generators,[5] MG 2 and MG 3, and a 24-cell storage battery.[8] Both motor generators may be operated at the same time, but each one is capable of supplying the full connected load (53.5 A at 56 V). The reliability of the system is increased by connecting the generator drive motors to separate TVA distribution buses. The motor for MG 2 is connected to motor control center 3, which is supplied from TVA–diesel-generator bus 3. The motor driving MG 3 is supplied by an identical arrangement from TVA–diesel-generator bus 4.

When operating conditions are normal, the TVA system is energized and supplies power to the 48-V dc bus through the motor generators. The battery remains connected to the bus at all times and is kept fully

charged by the output from the generators. The potential is 48 V dc, and the discharge capacity is 600 A-hr when the battery is fully charged. If the output from the generators is lost because of a TVA power failure or for any other reason, the battery will continue to supply the full load (53.5 A) on the 48-V dc bus without interrupti on for at least 12 hr. During this time the battery voltage will drop from 48 to 42 V, but all of the dc-powered components in the system are designed to operate normally with only 42 V applied. Annunciators sound in the auxiliary and main control rooms when the bus voltage falls below 44 V to warn the operator that the battery is nearly discharged. A complete description of the motor generators and the battery is given in ORNL-TM-728, Part I.[6]

The control panel for the 48-V dc system is located outside the battery room at the 840-ft elevation.[9] The control elements necessary for starting and stopping the motors, for connecting the generators to the bus individually or in parallel, for detecting system grounds, and for charging the battery are all located on the control panel. An elementary diagram of the motor-generator control circuit is shown in Fig. 4.13.4.[9] Each motor is energized through the contacts of a magnetic motor starter. The starter operating coils, C1, are energized by the flow of current through the "start" and "stop" push buttons in the low-voltage-release-type circuits. Auxiliary contacts on the operating coils control the operational mode indicator lamps – red lamp for run mode, green lamp for stop mode. The generators are connected to the 48-V dc bus when the magnetic contactor coils, C2, are energized. Each coil is energized by the flow of current through a reverse current relay contact (RCR) and the "start" and "stop" push buttons, which are also connected to form a low-voltage-release-type control circuit. If the current flowing through either generator reverses (operating as motors on battery power), the reverse current relay (RCR) operates to open contact (RCR), which deenergizes contactor coil C2 and disconnects the generator from the bus. Two auxiliary contacts operated by coil C2 control two position-indicator lamps – the red lamp is energized when the contactor is closed, and the green lamp is energized when the contactor is open. Two additional contacts operated by coil C2 are connected in parallel in annunciator circuit 898 (see Fig. 4.1.53). When both of the C2 contactors are deenergized at the same time, an audible and visual alarm is produced in the auxiliary and main control rooms (see circuit 864, Fig. 4.1.52). This informs the operator that the 48-V dc bus is being energized from the battery.

The bus voltage is monitored continuously by the undervoltage relay (UVR) as shown in Fig. 4.13.4. When the bus voltage falls below 44 V dc, the relay deenergizes. This produces audible and visual alarms on the local panel, in the auxiliary control room (see circuit 897, Fig. 4.1.53), and in the main control room (see circuit 864, Fig. 4.1.52).

Each generator is equipped with an equalizer lead, which is used only when the two machines are operated in parallel. Its purpose is to ensure an equal division of the load current between the two machines. In this case the two equalizer leads are connected together by closing the equalizer contactor C3. The control circuit for contactor C3 is identical to those just described for contactors C1 and C2.

A ground-detector lamp circuit is also shown in Fig. 4.13.4. The lamps are connected in series between the positive and negative buses. The connection common to both lamps is grounded. Normally both lamps are dark or burn dimly with equal brilliance. When the positive bus becomes grounded, the lamp connected to the negative bus will be much brighter than the lamp connected to the negative bus. The conditions are reversed when the negative bus becomes grounded.

Three voltmeters mounted on the control panel indicate generator output voltages and the bus voltage. Four ammeters indicate bus current, battery currents, and generator load currents.

**4.13.4.2 Distribution panels and circuits.** *IPP1.* Instrument power distribution panel IPP1 is mounted on the south wall of the auxiliary control room alongside several other panels which have already been described. The panel contains 14 double-pole circuit breaker elements connected to two 100-A main buses and is rated for use in 125/250-V dc distribution systems. One pole of each breaker is connected to the positive leg of each distribution circuit, and the other pole is connected to the negative leg.[3]

The 48-V dc system is considered to be the most reliable of the three power supplies; therefore the most important circuits in the MSRE control system are supplied through panels IPP1 and IPPA1. These circuits are identified in Table 4.13.3. The list includes, in addition to the safety channel 3 input relay circuits, the safety relay circuits which, when deenergized, produce load scrams (circuit 124, Fig. 4.1.10), emergency fuel drains (circuits 18 and 19, Fig. 4.1.2), containment block valve closures (see Figs. 4.1.3, 4.1.4, 4.1.5, and 4.1.6), and control rod scrams (circuit 28, Fig. 4.1.2). The master control circuits (see Figs. 4.1.9, 4.1.11, and 4.1.12) are also energized through panel IPP1. All of the above circuits energize control elements which exert

**Table 4.13.3. 48-V dc system power distribution**

| IPP1 |
|---|
| 1.[a] Control rod clutch circuits. |
| 2. Safety circuits, channel 3. |
| 3. Load scram demand circuits. |
| 4. Emergency fuel drain demand circuits. |
| 5. Containment block valve circuits. |
| 6. Master control circuits. |
| **IPPA1** |
| 1. Safety system instruments, channel 3. |
| 2. Nuclear control instruments, channel 3. |

[a]These item numbers are not related to distribution panel circuit breakers or circuit numbers. Actual circuits are shown on drawings E-HH-Z-41695 and -57412 (ref. 4).

a direct and immediate influence on the status of operating conditions in the reactor primary system. When deenergized, nearly all of the elements in the above circuits act to shut down the reactor and in some cases produce a system drain. Such drastic action is neither desirable nor necessary when safety is not involved. By connecting the elements to an uninterruptible supply of power, they remain available for use during TVA power outages and other disturbances. This enables the operator to limit the extent of the shutdown or at least conduct a more orderly shutdown.

*IPPA1.* Instrument panel IPPA1 distributes 120-V, 60-Hz ac power to the instrument components used in the channel 3 safety systems. The supply side of panel IPPA1 may be connected to either one of two power sources, the reliable ac system or the 48-V dc system, by the circuit arrangement shown in Fig. 4.13.2. The panel is normally connected to the 48-V dc system through the 1-kW static inverter,[11] $E_vM$-2000, but is automatically transferred to the reliable ac system through circuit 20 in IPP3 when the output from the static inverter fails. When power is available from the static inverter, $E_vM$-2000, relay KIPP1 is energized, contact KIPP1B is open, and contact KIPP1A is closed, connecting IPPA1 to $E_vM$-2000. If the output from $E_vM$-2000 fails, the relay deenergizes, and the contact positions reverse to connect IPPA1 to circuit 20 in IPP3.

## References


1. Westinghouse Electric Corporation, *Instruction Book, Installation, Operation, and Maintenance of AccurCon Inverter,* #19-600-24.
2. Oak Ridge National Laboratory drawing D-KK-C-55106, Basement Floor Plan, 120/250 V Emergency Power.
3. Oak Ridge National Laboratory drawings:
   - E-HH-D-57369 – Instrument Power Panel 1, Maintenance Elementary
   - E-HH-D-57370 – Instrument Power Panel 2, Maintenance Elementary
   - E-HH-Z-41788 – Instrument Power Interconnection Wiring, Sheet 3 of 4
   - D-HH-Z-57366 – Instrument Power Panel 3, Maintenance Elementary
   - D-HH-D-57364 – Instrument Power Panel A1 and A4, Maintenance Elementary
   - D-HH-D-57367 – Instrument Power Panel 4, Maintenance Elementary
   - D-HH-D-57365 – Instrument Power Panel A3, Maintenance Elementary
   - D-HH-D-57443 – Instrument Power Panel 5, Maintenance Elementary
   - D-HH-D-57371 – Instrument Power Panel 7, Maintenance Elementary
   - D-HH-D-57368 – Nuclear Instrument Power Distribution, Maintenance Elementary, Sheet 1 of 2
   - D-HH-D-57369 – Nuclear Instrument Power Distribution, Maintenance Elementary, Sheet 2 of 2
4. Oak Ridge National Laboratory drawings:
   - E-HH-Z-41695 – Instrument Power Distribution, Single-Line Diagram, Sheet 1 of 2
   - E-HH-Z-57412 – Instrument Power Distribution, Single-Line Diagram, Sheet 2 of 2
5. The Electric Products Company, *Instruction Manual for Installation, Operation, and Maintenance of Diverter-Pole Motor-Generators,* SM-1050 (Feb. 1, 1950).
6. R. C. Robertson, *MSRE Design and Operations Report, Part I, Description of Reactor Design,* ORNL-TM-728, p. 477.
7. J. R. Tallackson, *MSRE Design and Operations Report, Part IIA, Nuclear and Process Instrumentation,* ORNL-TM-729, Part IIA, pp. 1–96.
8. Electrical Storage Battery Company, Exide Industrial Division, *Instruction Manual, Installing and Operating Exide Batteries,* Form 4676, 6th ed.
9. Oak Ridge National Laboratory drawings:
   - D-KK-C-55106 – Basement Floor Plan, 120/240 Volts Emergency Power

D-KK-C-55108 – 48-Volt DC Battery Room Plan

D-KK-C-55108 – MG 2 & MG 3 Control Panel Layout and Wiring Diagram

D-KK-C-55112 – Motor Generator Sets 2 & 3 Schematic Control Diagram

10. R. C. Robertson, *MSRE Design and Operations Report, Part I, Description of Reactor Design,* ORNL-TM-728, sect. 19.6.1, pp. 476–77.

11. General Electric Company, *Static Inverter Instruction Manual,* GEI-98283.

12. R. C. Robertson, *MSRE Design and Operations Report, Part I, Description of Reactor Design,* ORNL-TM-728, chap. 19, pp. 453–75.

13. J. R. Tallackson, *MSRE Design and Operations Report, Part IIA, Nuclear and Process Instrumentation,* ORNL-TM-729, Part IIA sects. 1.5 and 2.5, pp. 55 and 177.

14. J. R. Tallackson, *MSRE Design and Operations Report, Part IIA, Nuclear and Process Instrumentation,* ORNL-TM-729, Part IIA, sects. 2.9 and 2.11, pp. 331–41, 367–72.

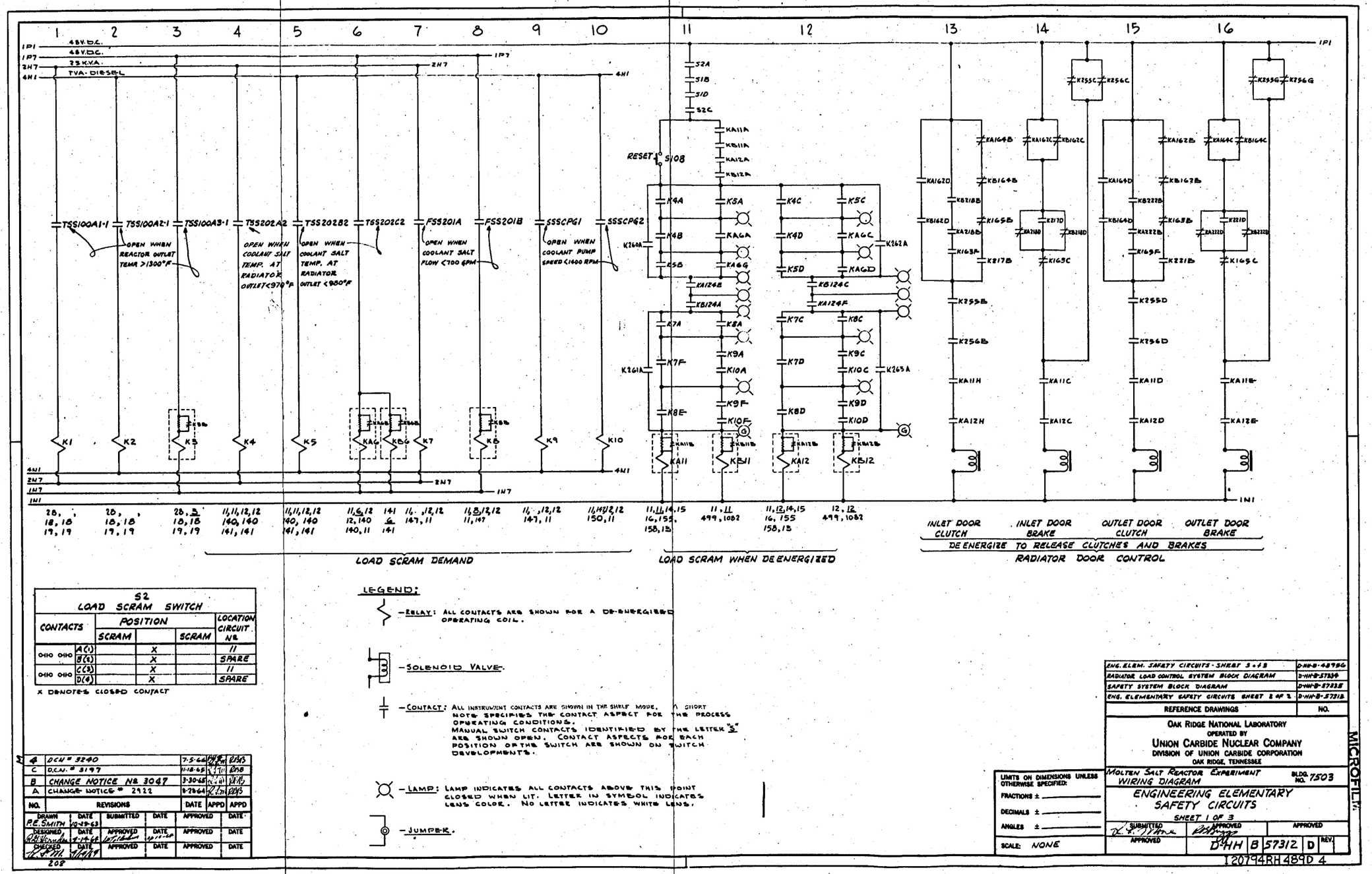


| S2 LOAD SCRAM SWITCH | | | | | |
|---|---|---|---|---|---|
| CONTACTS | | POSITION | | | LOCATION CIRCUIT NO. |
| | | SCRAM | | SCRAM | |
| OHO OHO | A(1) | | X | | 11 |
| | B(2) | | X | | SPARE |
| OHO OHO | C(3) | | X | | 11 |
| | D(4) | | X | | SPARE |

X DENOTES CLOSED CONTACT

LEGEND:

—RELAY: ALL CONTACTS ARE SHOWN FOR A DE-ENERGIZED OPERATING COIL.

—SOLENOID VALVE.

—CONTACT: ALL INSTRUMENT CONTACTS ARE SHOWN IN THE SHELF MODE. A SHORT NOTE SPECIFIES THE CONTACT ASPECT FOR THE PROCESS OPERATING CONDITIONS. MANUAL SWITCH CONTACTS IDENTIFIED BY THE LETTER "S" ARE SHOWN OPEN. CONTACT ASPECTS FOR EACH POSITION OF THE SWITCH ARE SHOWN ON SWITCH DEVELOPMENTS.

—LAMP: LAMP INDICATES ALL CONTACTS ABOVE THIS POINT CLOSED WHEN LIT. LETTER IN SYMBOL INDICATES LENS COLOR. NO LETTER INDICATES WHITE LENS.

—JUMPER.

| NO. | REVISIONS | DATE | APPD | APPD |
|---|---|---|---|---|
| D | DCN # 3240 | 7-5-66 | | RAS |
| C | D.C.N. # 3197 | 11-18-65 | | RAS |
| B | CHANGE NOTICE NO 3047 | 3-30-65 | | RAS |
| A | CHANGE NOTICE # 2922 | 8-28-64 | | RAS |

| DRAWN | DATE | SUBMITTED | DATE | APPROVED | DATE |
|---|---|---|---|---|---|
| R.E. SMITH | 10-29-63 | | | | |
| DESIGNED | DATE | APPROVED | DATE | APPROVED | DATE |
| | 2-14-68 | | | | |
| CHECKED | DATE | APPROVED | DATE | APPROVED | DATE |
| | | | | | |

208

LIMITS ON DIMENSIONS UNLESS OTHERWISE SPECIFIED:
FRACTIONS ±
DECIMALS ±
ANGLES ±
SCALE: NONE

| REFERENCE DRAWINGS | NO. |
|---|---|
| ENG. ELEM. SAFETY CIRCUITS - SHEET 3 of 3 | D-HH-B-48996 |
| RADIATOR LOAD CONTROL SYSTEM BLOCK DIAGRAM | D-HH-B-57334 |
| SAFETY SYSTEM BLOCK DIAGRAM | D-HH-B-57335 |
| ENG. ELEMENTARY SAFETY CIRCUITS SHEET 2 OF 3 | D-HH-B-57312 |

OAK RIDGE NATIONAL LABORATORY
OPERATED BY
UNION CARBIDE NUCLEAR COMPANY
DIVISION OF UNION CARBIDE CORPORATION
OAK RIDGE, TENNESSEE

MOLTEN SALT REACTOR EXPERIMENT WIRING DIAGRAM
BLDG. NO. 7503

ENGINEERING ELEMENTARY SAFETY CIRCUITS
SHEET 1 OF 3

SUBMITTED | APPROVED | APPROVED | APPROVED

D4HH B 57312 D REV.

120794RH489D 4

MICROFILM

Fig. 4.1.1. Engineering elementary, safety circuits, sheet 1 of 2.

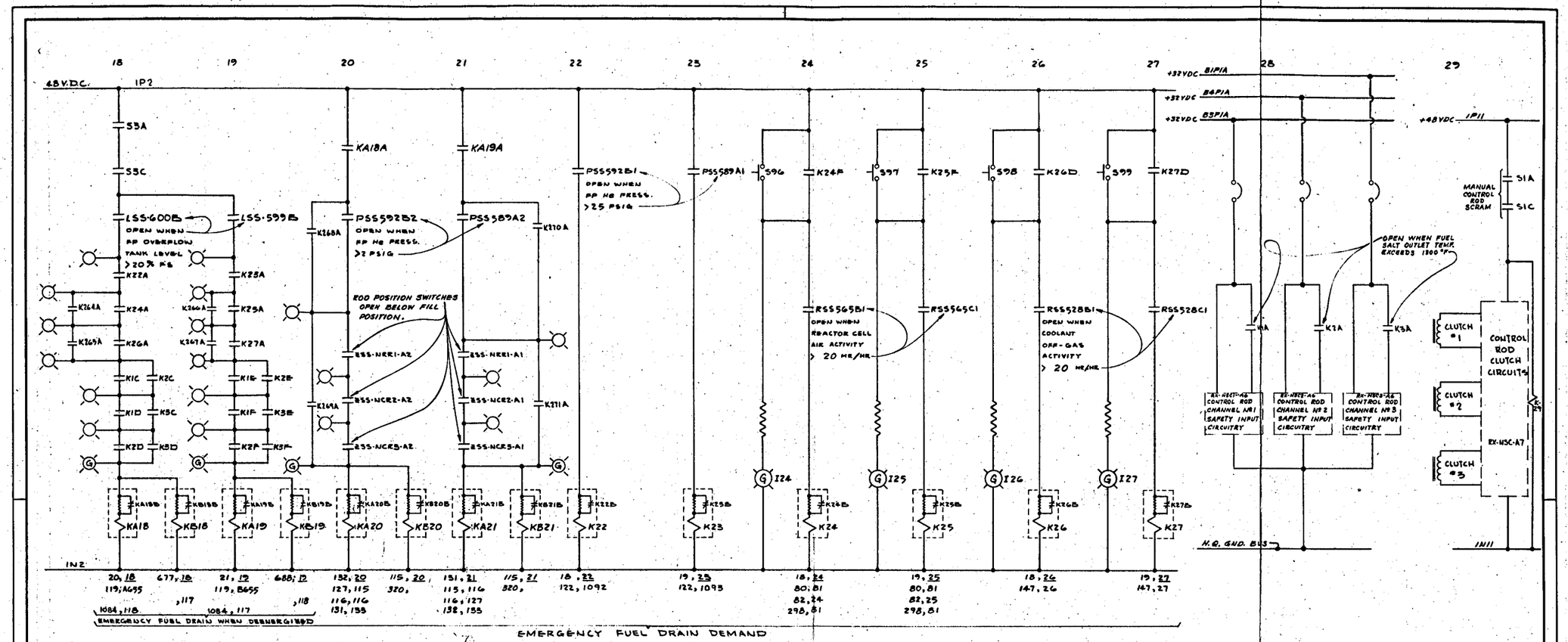


| S1 CONTROL ROD SCRAM SW. | | | | | |
|---|---|---|---|---|---|
| CONTACTS | | POSITION SCRAM | | POSITION SCRAM | LOCATION CKT. Nº |
| o-|o o-|o | A (1) | | X | | 29 |
| | B (2) | | X | | 11 |
| o-|o o-|o | C (3) | | X | | 29 |
| | D (4) | | X | | 11 |
| o-|o o-|o | E (5) | | X | | SPARE |
| | F (6) | | X | | " |
| o-|o o-|o | G (7) | | X | | " |
| | H (8) | | X | | " |

| S3 EMERGENCY FUEL SALT DRAIN SW. | | | | | |
|---|---|---|---|---|---|
| CONTACTS | | POSITION DRAIN | | POSITION DRAIN | LOCATION CKT. Nº |
| o-|o o-|o | A (1) | | X | | 18 |
| | B (2) | | X | | SPARE |
| o-|o o-|o | C (3) | | X | | 18 |
| | D (4) | | X | | SPARE |

NOTE:

1. I24, I25, I26, & I27 ARE LOCATED ON THE PROCESS RADIATION MONITOR PANEL IN THE AUXILIARY ROOM.

| NO. | REVISIONS | DATE | APPD | APPD |
|---|---|---|---|---|
| 7 | DCN # 3373 | 2-26-68 | PHN | |
| G | DCN # 3244 | 4-28-67 | PHN | |
| E | DCN # 3240 | 7-5-66 | DHB | |
| D | D.C.N. # 3197 | 12-6-65 | DHB | |
| C | D.C.N. # 3182 | 9-21-65 | DHB | |
| B | CHANGE NOTICE Nº 3047 | 3-22-65 | DHB | |
| A | CHANGE NOTICE # 2922 | 5-28-64 | DHB | |

| DRAWN | DATE | SUBMITTED | DATE | APPROVED | DATE |
|---|---|---|---|---|---|
| E J J | 10-3-63 | | | | |
| DESIGNED | DATE | APPROVED | DATE | APPROVED | DATE |
| | 4-14-68 | | 10-8-68 | | |
| CHECKED | DATE | APPROVED | DATE | APPROVED | DATE |
| | 4/11/64 | | | | |

LIMITS ON DIMENSIONS UNLESS OTHERWISE SPECIFIED:
FRACTIONS ±
DECIMALS ±
ANGLES ±
SCALE: NONE

| | |
|---|---|
| ENG. ELEMENTARY SAFETY CKT'S. SHEET 3 of 3 | D-HH-B-48956 |
| ENG. ELEMENTARY SAFETY CKT'S. SHEET 1 of 3 | D-HH-B-57312 |
| SAFETY SYSTEM BLOCK DIAGRAM | D-HH-B-57335 |
| REFERENCE DRAWINGS | NO. |

OAK RIDGE NATIONAL LABORATORY
OPERATED BY
UNION CARBIDE NUCLEAR COMPANY
DIVISION OF UNION CARBIDE CORPORATION
OAK RIDGE, TENNESSEE

MOLTEN SALT REACTOR EXPERIMENT WIRING DIAGRAM — BLDG. NO. 7503

ENGINEERING ELEMENTARY SAFETY CIRCUITS SHEET 2 of 3

SUBMITTED | APPROVED | APPROVED | APPROVED

D-HH-B-57313-D REV.

I20794RH490D 7

Fig. 4.1.2. Engineering elementary, safety circuits, sheet 2 of 2.

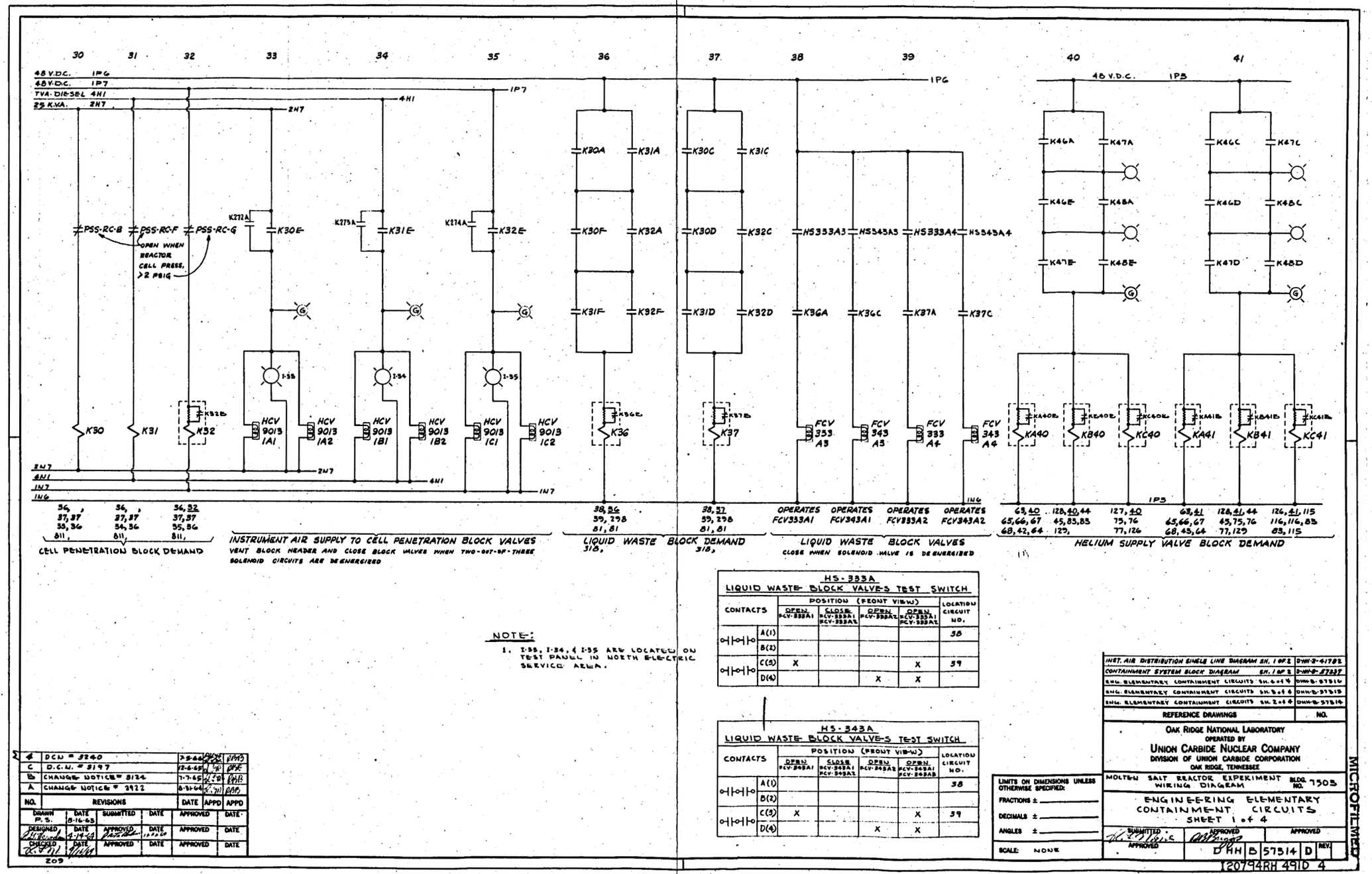


Fig. 4.1.3. Engineering elementary, containment circuits, sheet 1 of 4.

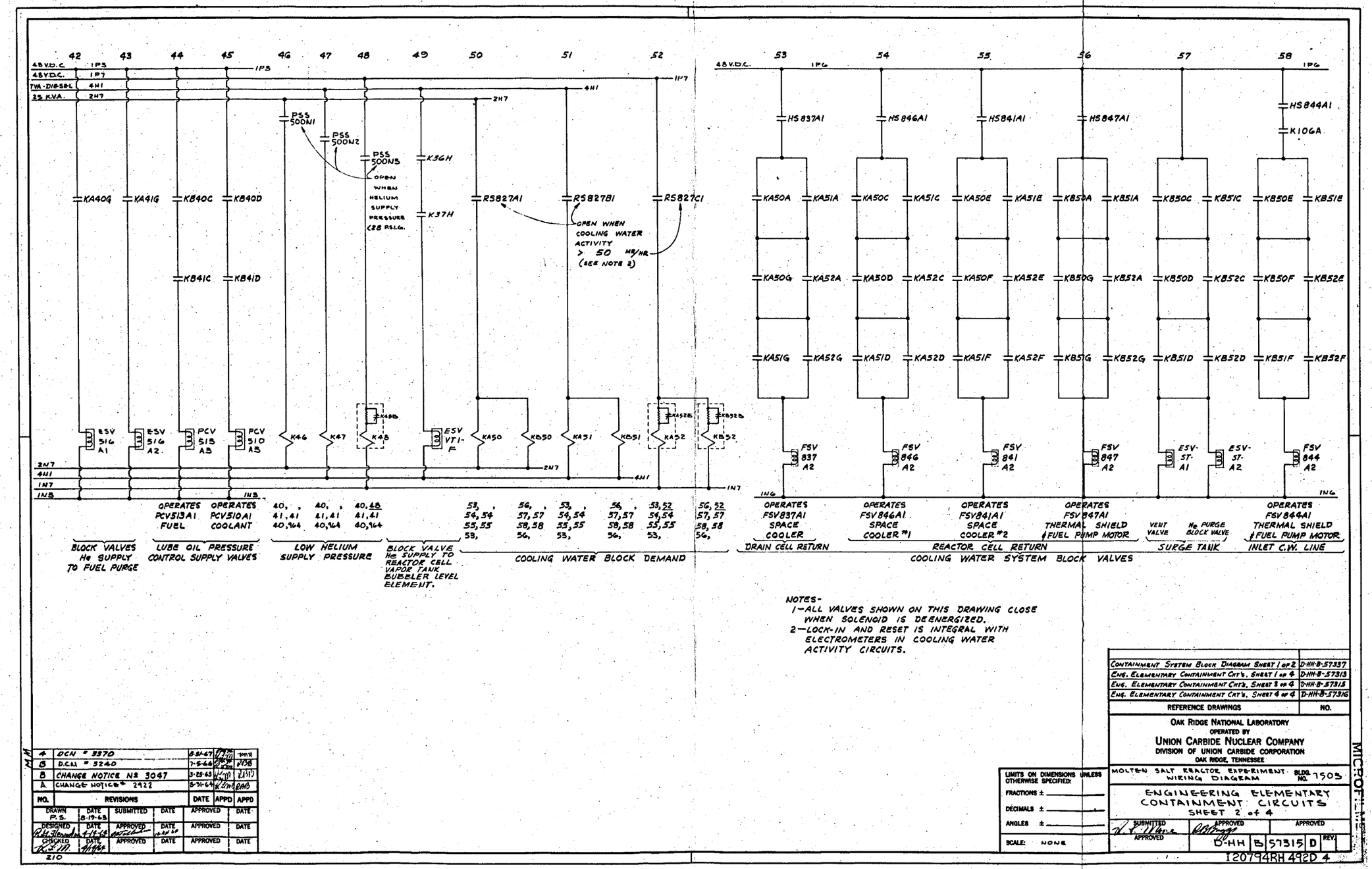


Fig. 4.1.4. Engineering elementary, containment circuits, sheet 2 of 4.

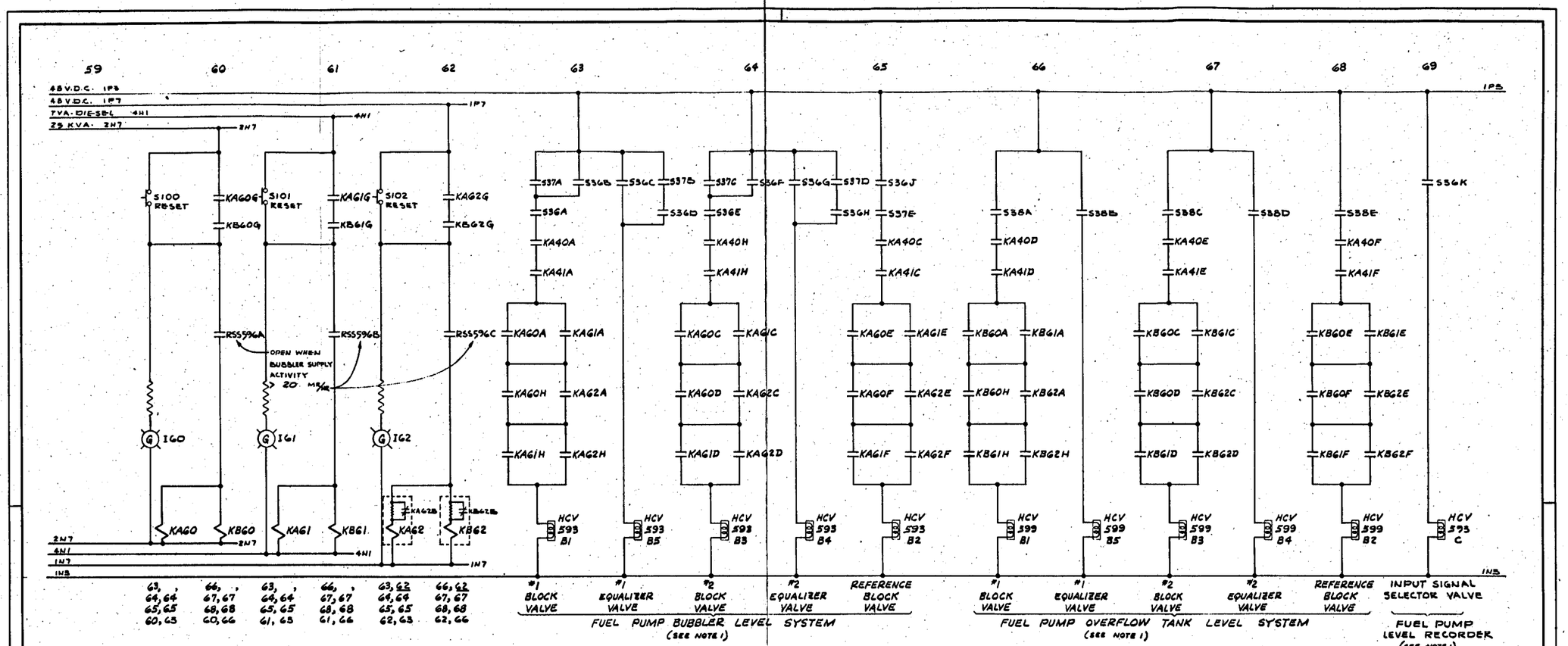


**S37**
**FUEL PUMP LEVEL SYSTEM - TEST SWITCH**

| CONTACTS | | POSITION (FRONT VIEW) #1 EQUALIZER | #1 BLOCK | OFF (SR) | REFERENCE BLOCK | #2 BLOCK | #2 EQUALIZER | LOCATION CIRCUIT Nº |
|---|---|---|---|---|---|---|---|---|
| OHO OHO | A (1) | X | | X | X | X | X | 63 |
| | B (2) | X | | | | | | 63 |
| OHO OHO | C (3) | X | X | X | X | | X | 64 |
| | D (4) | | | | | | X | 64 |
| OHO | E (5) | X | X | X | | X | X | 65 |

**S36**
**FUEL PUMP LEVEL SYSTEM - SELECTOR SWITCH**

| CONTACTS | | OFF | POSITION (FRONT VIEW) 1: RECORD LT-596-B, LT-596-B | 2: RECORD LT-596-B, LT-596-B, LT-592-C | 3: RECORD LT-596-B, LT-596-B, LT-593-C | 4: RECORD LT-593-C, LT-593-C | LOCATION CIRCUIT Nº |
|---|---|---|---|---|---|---|---|
| OHO OHO | A | | X | X | X | | 63 |
| | B | | X | X | | | 63 |
| OHO OHO | C | X | | | | X | 63 |
| | D | X | | | X | X | 63 |
| OHO OHO | E | | | X | X | X | 64 |
| | F | | | | X | X | 64 |
| OHO OHO | G | X | X | | | | 64 |
| | H | X | X | X | | | 64 |
| OHO OHO | J | | X | X | X | X | 65 |
| | K | | | | X | X | 69 |
| OHO OHO | L | | | | | X | 827 |
| | M | | X | | | | 827 |

**S38**
**FUEL PUMP OVERFLOW TANK LEVEL SYSTEM - TEST SWITCH**

| CONTACTS | | POSITION (FRONT VIEW) #1 EQUALIZER | #1 BLOCK | OFF (SR) | REFERENCE BLOCK | #2 BLOCK | #2 EQUALIZER | LOCATION CIRCUIT Nº |
|---|---|---|---|---|---|---|---|---|
| OHO OHO | A (1) | X | | X | X | X | X | 66 |
| | B (2) | X | | | | | | 66 |
| OHO OHO | C (3) | X | X | X | X | | X | 67 |
| | D (4) | | | | | | X | 67 |
| OHO | E (5) | X | X | X | | X | X | 68 |

NOTES-
1-ALL SOLENOID VALVES ON THIS DRAWING CLOSE WHEN DEENERGIZED EXCEPT HCV-593-C WHICH IS A 3-WAY VALVE THAT CONNECTS THE FUEL PUMP BOWL LEVEL RECORDER TO TRANSMITTER LT-596-B WHEN DEENERGIZED AND TO LT-593-C WHEN ENERGIZED.
2-LAMPS IG0, IG1, & IG2 ARE LOCATED ON THE PROCESS MONITOR PANEL IN THE AUXILIARY ROOM.

| REFERENCE DRAWINGS | NO. |
|---|---|
| CONTAINMENT SYSTEM BLOCK DIAGRAM SHEET 1 OF 2 | D-HH-B-57337 |
| CONTAINMENT SYSTEM BLOCK DIAGRAM SHEET 2 OF 2 | D-HH-B-57338 |
| ENG. ELEMENTARY CONTAINMENT CKT'S, SHEET 1 OF 4 | D-HH-B-57313 |
| ENG. ELEMENTARY CONTAINMENT CKT'S, SHEET 2 OF 4 | D-HH-B-57314 |
| ENG. ELEMENTARY CONTAINMENT CKT'S, SHEET 4 OF 4 | D-HH-B-57316 |

OAK RIDGE NATIONAL LABORATORY
OPERATED BY
UNION CARBIDE NUCLEAR COMPANY
DIVISION OF UNION CARBIDE CORPORATION
OAK RIDGE, TENNESSEE

MOLTEN SALT REACTOR EXPERIMENT WIRING DIAGRAM — BLDG. NO. 7503

ENGINEERING ELEMENTARY CONTAINMENT CIRCUITS SHEET 3 of 4

SUBMITTED — APPROVED — APPROVED — APPROVED

D-HH B 57316 D REV.

T20794RH 493D 1

LIMITS ON DIMENSIONS UNLESS OTHERWISE SPECIFIED:
FRACTIONS ±
DECIMALS ±
ANGLES ±
SCALE: NONE

| NO. | REVISIONS | DATE | APPD | APPD |
|---|---|---|---|---|
| 1 | DCN # 3240 | 1-19-67 | | |

| DRAWN R.S. | DATE 8-20-63 | SUBMITTED | DATE | APPROVED | DATE |
|---|---|---|---|---|---|
| DESIGNED | DATE 4-14-63 | APPROVED | DATE | APPROVED | DATE |
| CHECKED | DATE 9/16/66 | APPROVED | DATE | APPROVED | DATE |

210

MIC 20 FEET

Fig. 4.1.5. Engineering elementary, containment circuits, sheet 3 of 4.

6

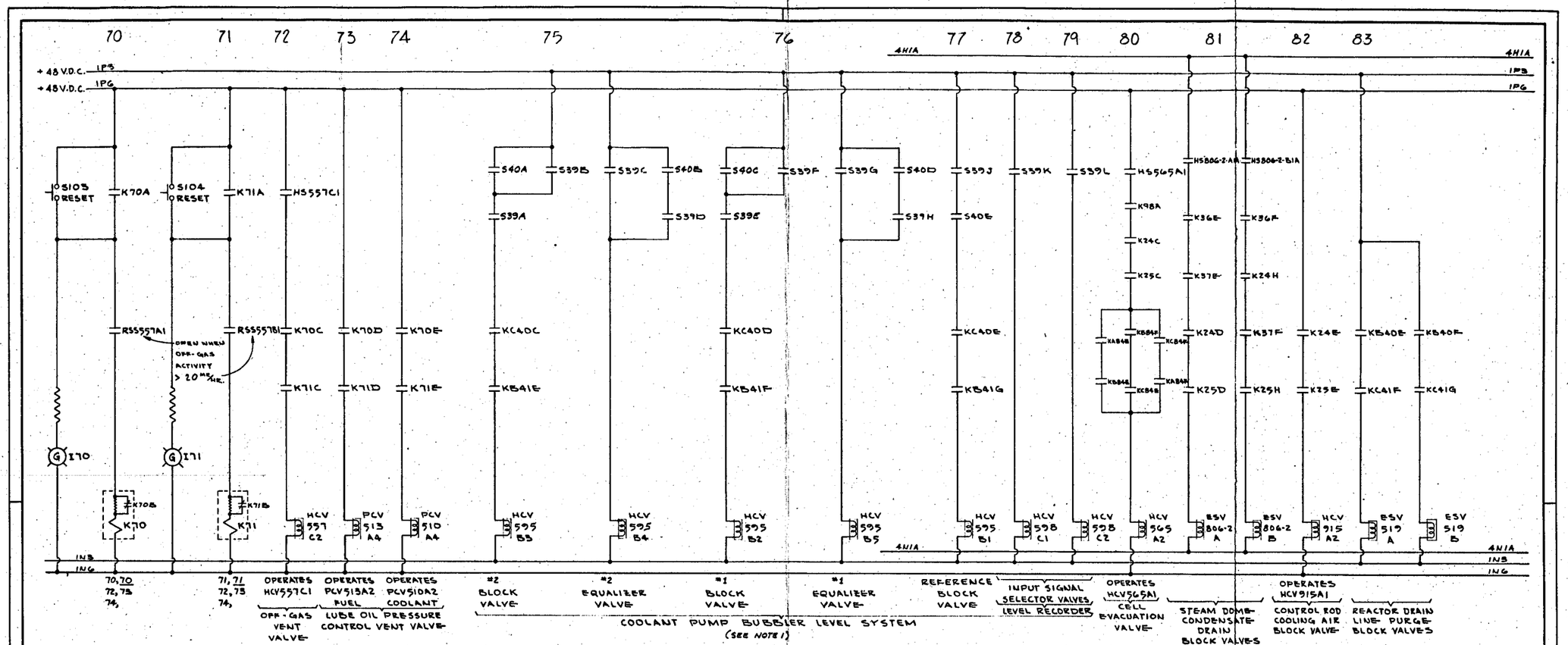


**S40**
**COOLANT PUMP LEVEL SYSTEM - TEST SWITCH**

| CONTACTS | | POSITION (FRONT VIEW) 1 #2 EQUALIZER | 2 #2 BLOCK | 3 OFF ▷SR◁ | 4 REFERENCE BLOCK | 5 #1 BLOCK | 6 #1 EQUALIZER | LOCATION CIRCUIT Nº |
|---|---|---|---|---|---|---|---|---|
| O-I-O O-I-O | A (1) | X | | X | X | X | X | 75 |
| | B (2) | X | | | | | | 75 |
| O-I-O O-I-O | C (3) | X | X | X | X | | X | 76 |
| | D (4) | | | | | | X | 76 |
| O-I-O | E (5) | X | X | X | | X | X | 77 |

**S39**
**COOLANT PUMP LEVEL SYSTEM - SELECTOR SWITCH**

| CONTACTS | | POSITION (FRONT VIEW) OFF | 1 RECORD LT-598-C LT-598-C | 2 RECORD LT-598-C LT-595-C | 3 LE-CP-A | 4 RECORD LT-598-C LT-598-C | 5 RECORD LT-595-C LT-595-C | LOCATION CIRCUIT Nº |
|---|---|---|---|---|---|---|---|---|
| O-I-O O-I-O | A (1) | | X | X | X | X | | 75 |
| | B (2) | | X | X | | | | 75 |
| O-I-O O-I-O | C (3) | X | | | | | X | 75 |
| | D (4) | X | | | X | X | X | 75 |
| O-I-O O-I-O | E (5) | | | X | X | X | X | 76 |
| | F (6) | | | | | X | X | 76 |
| O-I-O O-I-O | G (7) | X | X | | | | | 76 |
| | H (8) | X | X | X | X | | | 76 |
| O-I-O O-I-O | J (9) | | X | X | X | X | X | 77 |
| | K (10) | | | | | X | X | 78 |
| O-I-O O-I-O | L (11) | X | | | X | | | 79 |
| | M (12) | | | | | | X | 835 |
| O-I-O | N (13) | | X | | | | | 835 |

NOTES-
1- ALL VALVES ON THIS DRAWING CLOSE WHEN SOLENOID DE-ENERGIZED EXCEPT HCV-598-C1 AND HCV-598-C2 WHICH ARE 3-WAY VALVES THAT CONNECT THE COOLANT PUMP BOWL LEVEL RECORDER TO ONE OF THREE LEVEL TRANSMITTERS AS FOLLOWS:

| ENERGIZE | DE ENERGIZE | RECORDER CONNECTS TO |
|---|---|---|
| | HCV-598-C1 & HCV-598-C2 | LT-598-C |
| HCV-598-C1 | HCV-598-C2 | LT-595-C |
| HCV-598-C2 | | LE-CP-A |

2- LAMPS I70, & I71 ARE LOCATED ON THE PROCESS RADIATION MONITOR PANEL IN THE AUXILIARY ROOM.

| NO. | REVISIONS | DATE | APPD | APPD |
|---|---|---|---|---|
| G | D.C.N. # 3240 | 1-19-67 | RAB | RAB |
| D | D.C.N. # 3197 | 12-6-65 | RAB | RAB |
| C | D.C.N. # 3182 | 9-23-65 | RAB | RAB |
| B | CHANGE NOTICE # 3124 | 6-10-65 | RAB | RAB |
| A | CHANGE NOTICE # 2972 | 9-5-64 | RAB | RAB |

| DRAWN | DATE | SUBMITTED | DATE | APPROVED | DATE |
|---|---|---|---|---|---|
| D.J. | 10-4-63 | | | | |
| DESIGNED | DATE | APPROVED | DATE | APPROVED | DATE |
| R.H. Hendron | 4-14-64 | | | | |
| CHECKED | DATE | APPROVED | DATE | APPROVED | DATE |
| K.S. Ott | 9/14/64 | | | | |

211

LIMITS ON DIMENSIONS UNLESS OTHERWISE SPECIFIED:
FRACTIONS ±
DECIMALS ±
ANGLES ±
SCALE: NONE

| REFERENCE DRAWINGS | NO. |
|---|---|
| COOLANT SALT SYSTEM BLOCK DIAGRAM | D-HH-B-57336 |
| CONTAINMENT SYSTEM BLOCK DIAGRAM SHEET 1 OF 2 | D-HH-B-57337 |
| CONTAINMENT SYSTEM BLOCK DIAGRAM SHEET 2 OF 2 | D-HH-B-57338 |
| ENG. ELEMENTARY CONTAINMENT CKT'S. SHEET 1 OF 4 | D-HH-B-57313 |
| ENG. ELEMENTARY CONTAINMENT CKT'S. SHEET 2 OF 4 | D-HH-B-57314 |
| ENG. ELEMENTARY CONTAINMENT CKT'S. SHEET 3 OF 4 | D-HH-B-57315 |

OAK RIDGE NATIONAL LABORATORY
OPERATED BY
UNION CARBIDE NUCLEAR COMPANY
DIVISION OF UNION CARBIDE CORPORATION
OAK RIDGE, TENNESSEE

MOLTEN SALT REACTOR EXPERIMENT WIRING DIAGRAM — BLDG. NO. 7503

ENGINEERING ELEMENTARY CONTAINMENT CIRCUITS SHEET 4 of 4

SUBMITTED | APPROVED | APPROVED
APPROVED

D-HH B 57317 D REV.

120794RH494D 5

MICROFILM

Fig. 4.1.6. Engineering elementary, containment circuits, sheet 4 of 4.

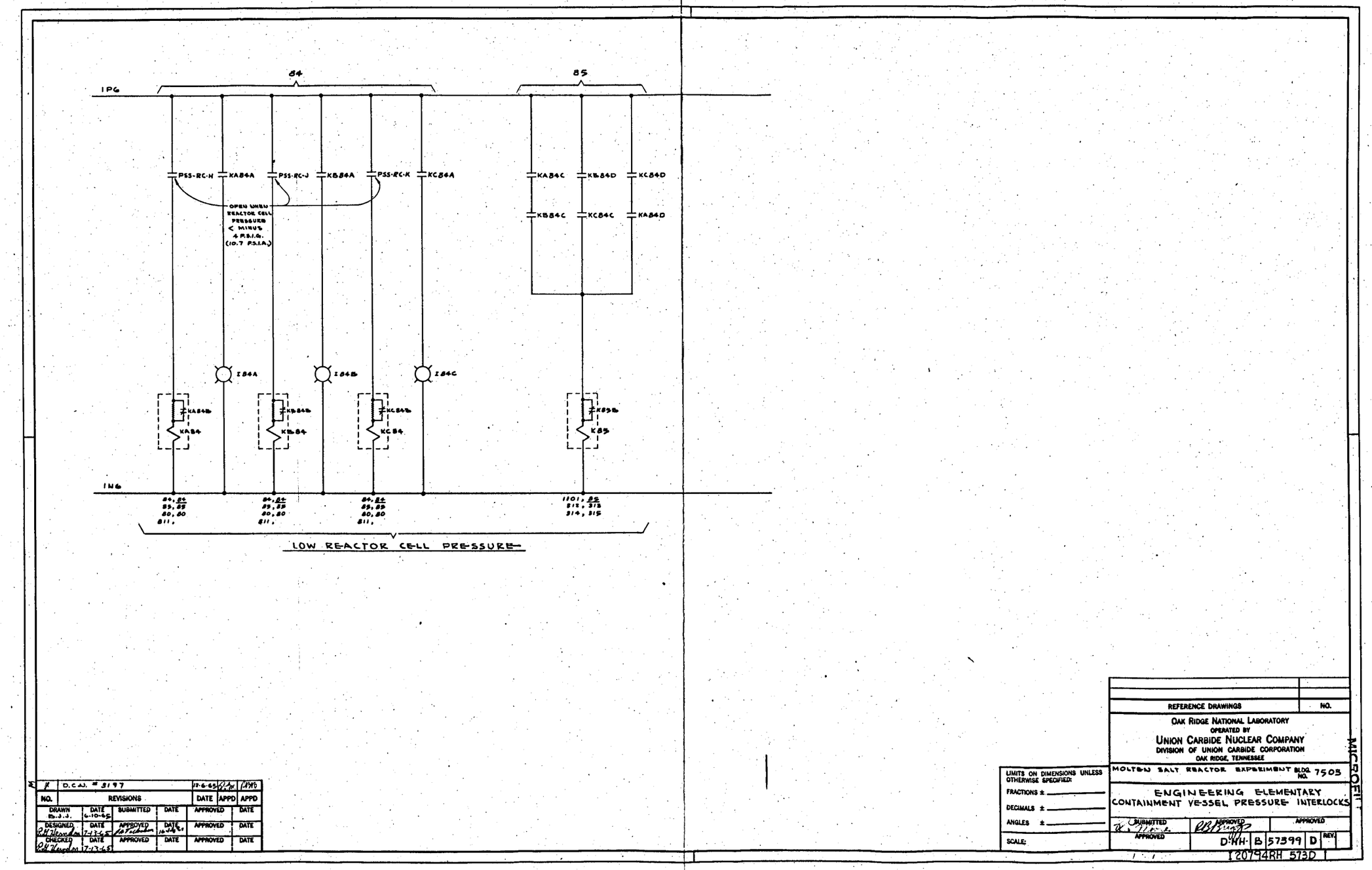


Fig. 4.1.7. Engineering elementary, containment vessel pressure interlocks.

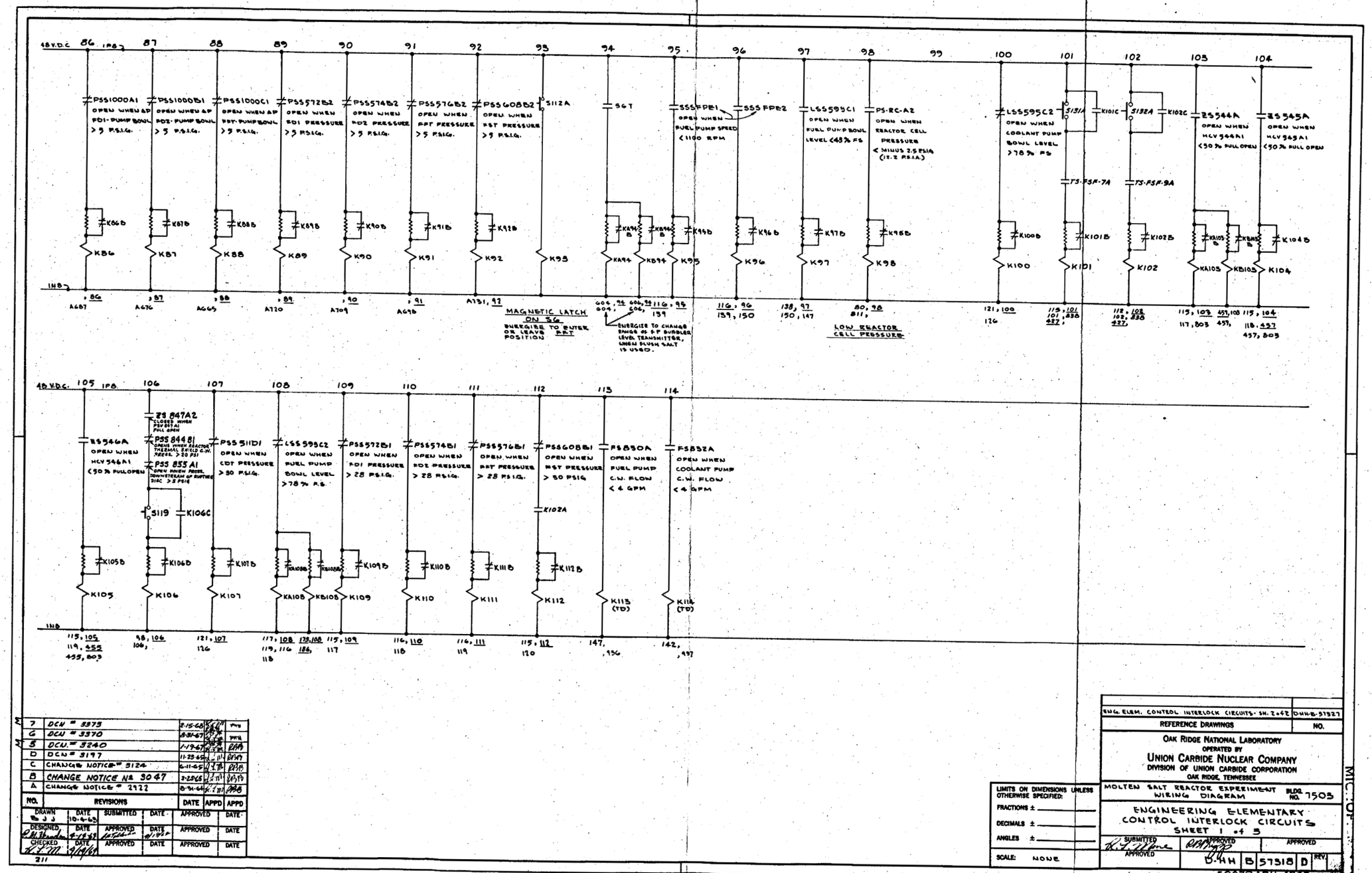


| NO. | REVISIONS | DATE | APPD | APPD |
|---|---|---|---|---|
| 7 | DCN # 3375 | 2-15-68 | | |
| G | DCN # 3370 | 8-31-67 | | |
| 5 | DCN # 3240 | 1-19-67 | | |
| D | DCN # 3197 | 11-23-66 | | |
| C | CHANGE NOTICE # 3124 | 6-11-65 | | |
| B | CHANGE NOTICE NO 3047 | 3-23-65 | | |
| A | CHANGE NOTICE # 2922 | 8-31-64 | | |

| DRAWN | DATE | SUBMITTED | DATE | APPROVED | DATE |
|---|---|---|---|---|---|
| | 10-4-63 | | | | |
| DESIGNED | DATE | APPROVED | DATE | APPROVED | DATE |
| | 4-15-63 | | | | |
| CHECKED | DATE | APPROVED | DATE | APPROVED | DATE |
| | 4/16/63 | | | | |

211

LIMITS ON DIMENSIONS UNLESS OTHERWISE SPECIFIED:
FRACTIONS ±
DECIMALS ±
ANGLES ±
SCALE: NONE

ENG. ELEM. CONTROL INTERLOCK CIRCUITS - SH. 2 of 2 — D-HH-B-51327
REFERENCE DRAWINGS — NO.

OAK RIDGE NATIONAL LABORATORY
OPERATED BY
UNION CARBIDE NUCLEAR COMPANY
DIVISION OF UNION CARBIDE CORPORATION
OAK RIDGE, TENNESSEE

MOLTEN SALT REACTOR EXPERIMENT WIRING DIAGRAM — BLDG. NO. 7503

ENGINEERING ELEMENTARY CONTROL INTERLOCK CIRCUITS SHEET 1 of 3

SUBMITTED — APPROVED — APPROVED

D-HH B 57518 D REV.

I20794RH 495D 7

Fig. 4.1.8. Engineering elementary, control interlock circuits, sheet 1 of 3.

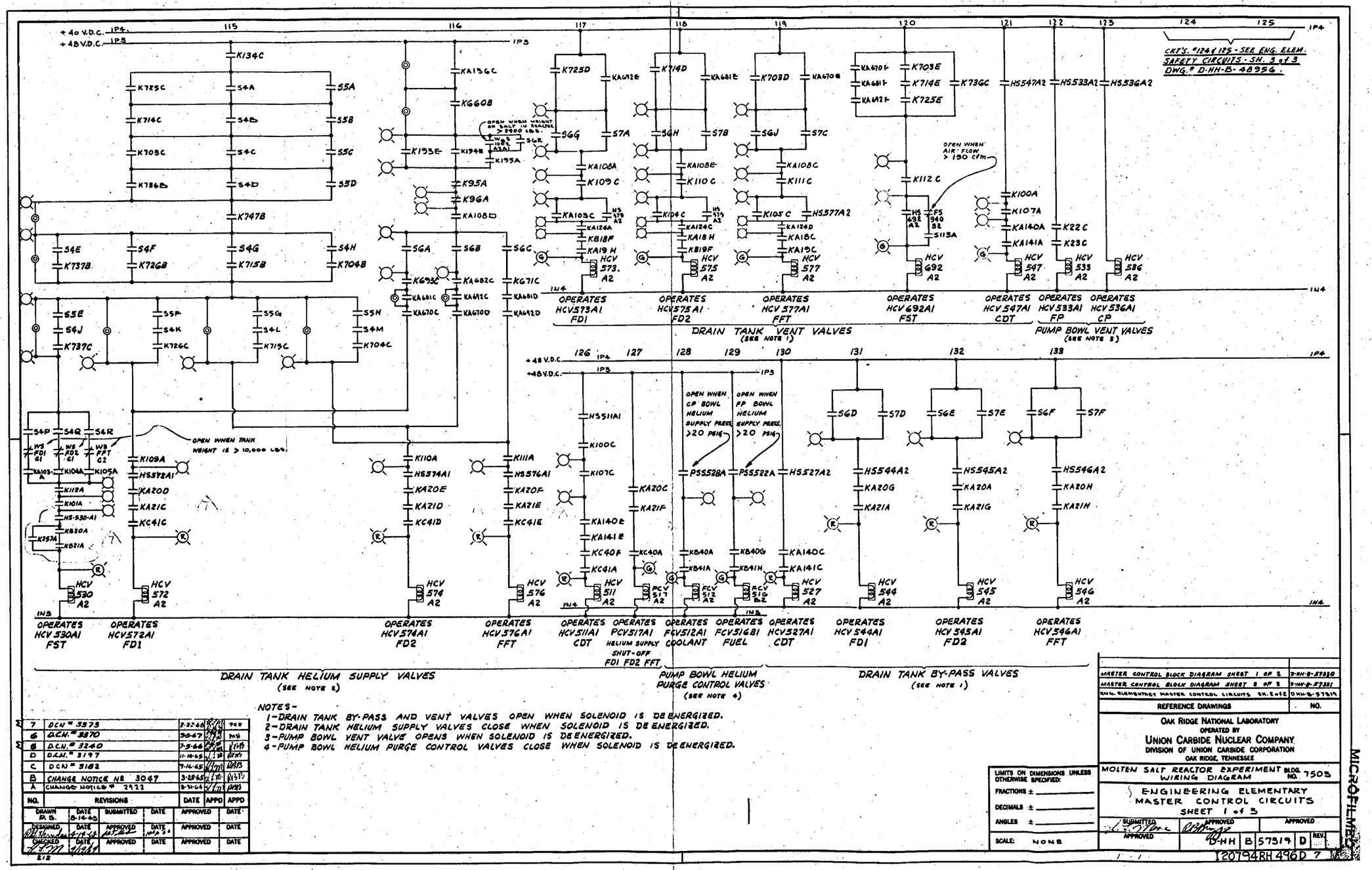


Fig. 4.1.9. Engineering elementary, master control circuits, sheet 1 of 3.

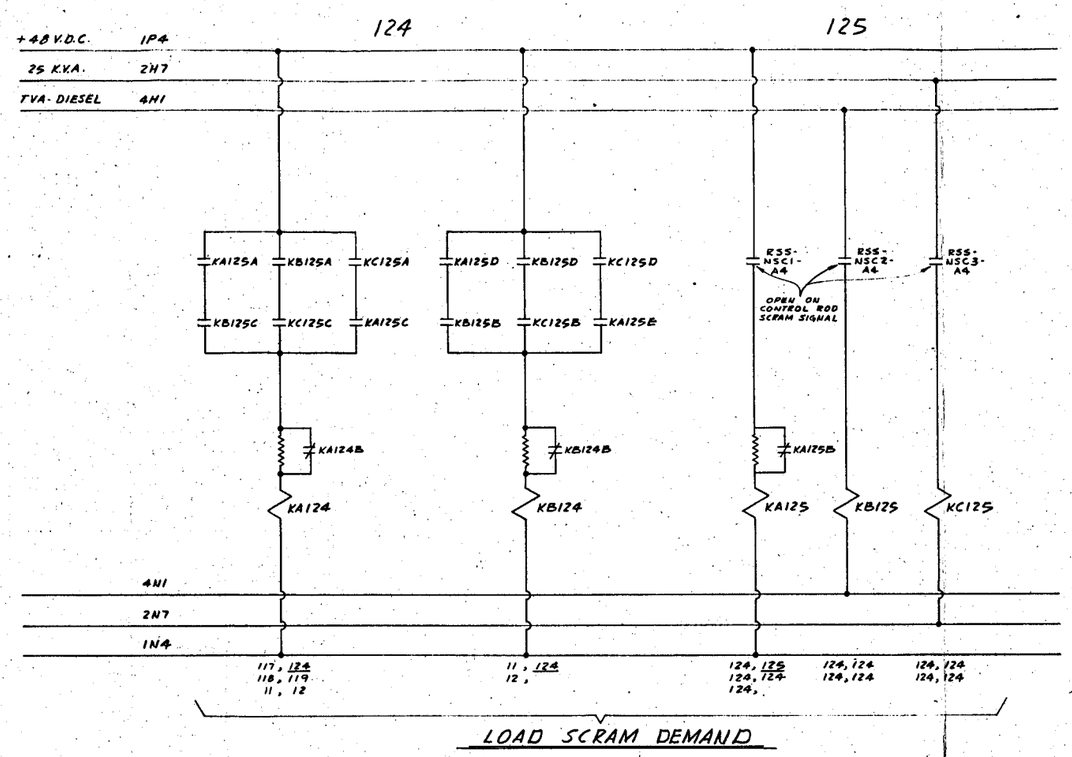


| NO. | REVISIONS | | DATE | APPD | APPD |
|---|---|---|---|---|---|
| DRAWN B.J.J. | DATE 7-11-66 | SUBMITTED | DATE | APPROVED | DATE |
| DESIGNED R.H.H. | DATE 1-20-67 | APPROVED | DATE | APPROVED | DATE |
| CHECKED R.H.H. | DATE 1-20-67 | APPROVED | DATE | APPROVED | DATE |

| REFERENCE DRAWINGS | NO. |
|---|---|
| RADIATOR LOAD CONTROL SYSTEM BLOCK DIAG. | D-HH-B-57394 |
| SAFETY SYSTEM BLOCK DIAG. | D-HH-B-57395 |
| ENG. ELEM. SAFETY CIRCUITS - SHEET 2 of 3 | D-HH-B-57313 |
| ENG. ELEM. SAFETY CIRCUITS - SHEET 1 of 3 | D-HH-B-57312 |

OAK RIDGE NATIONAL LABORATORY
OPERATED BY
UNION CARBIDE NUCLEAR COMPANY
DIVISION OF UNION CARBIDE CORPORATION
OAK RIDGE, TENNESSEE

LIMITS ON DIMENSIONS UNLESS OTHERWISE SPECIFIED:
FRACTIONS ±
DECIMALS ±
ANGLES ±
SCALE:

MOLTEN SALT REACTOR EXPERIMENT BLDG. NO. 7503

ENGINEERING ELEMENTARY
SAFETY CIRCUITS
SHEET 3 of 3

SUBMITTED | APPROVED | APPROVED
APPROVED

D-HH B 48956 D REV.

I20794RH 654D

MICROFILMED

Fig. 4.1.10. Engineering elementary, safety circuits, sheet 3 of 3.

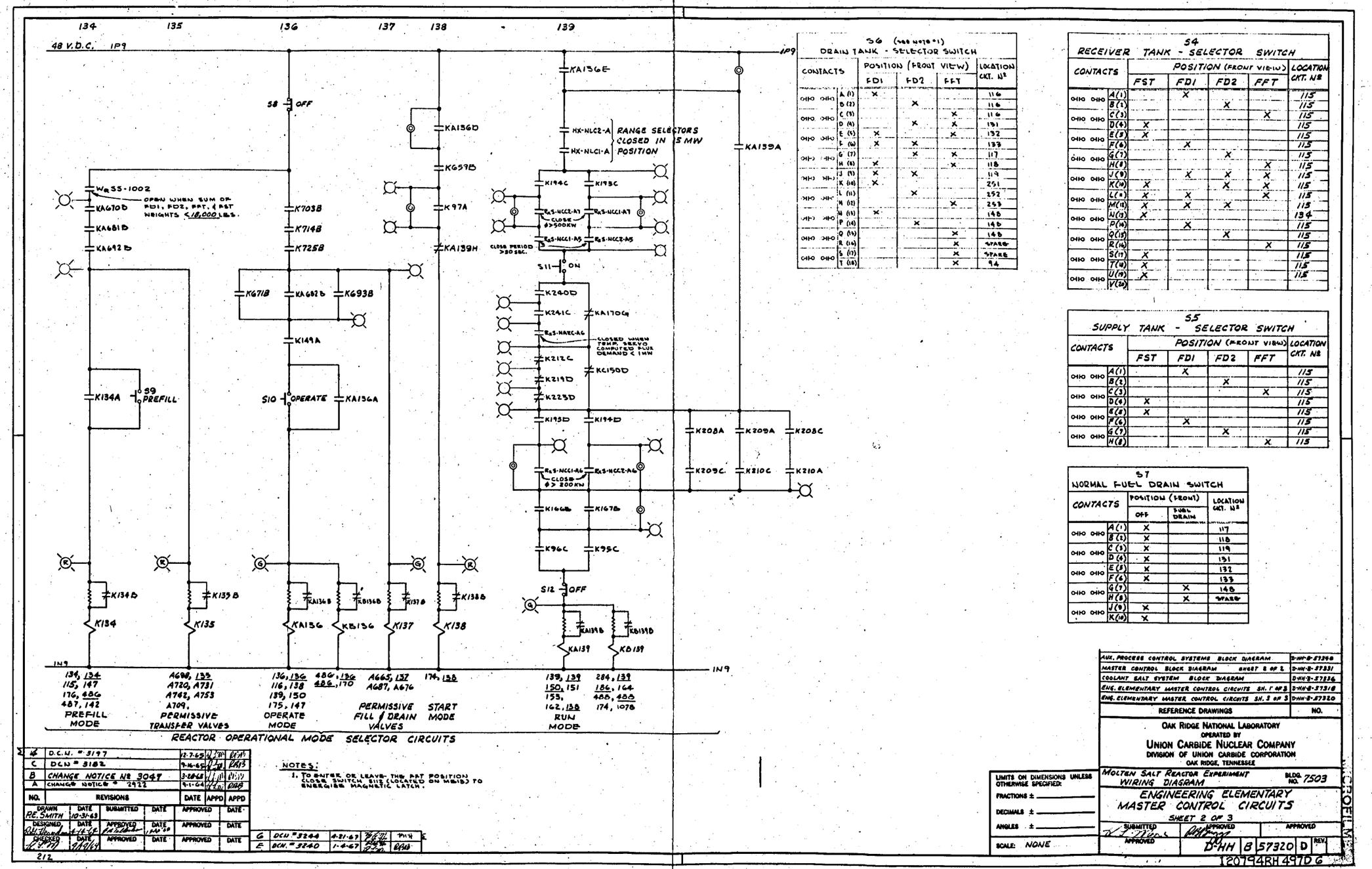


REACTOR OPERATIONAL MODE SELECTOR CIRCUITS

**S6 (see note #1)**
**DRAIN TANK - SELECTOR SWITCH**

| CONTACTS | | FD1 | FD2 | FFT | LOCATION CKT. Nº |
|---|---|---|---|---|---|
| OHO OHO | A (1) | X | | | 116 |
| | B (2) | | X | | 116 |
| OHO OHO | C (3) | | | X | 116 |
| | D (4) | | X | X | 151 |
| OHO OHO | E (5) | X | | X | 132 |
| | F (6) | X | X | | 133 |
| OHO OHO | G (7) | | X | X | 117 |
| | H (8) | X | | X | 118 |
| OHO OHO | J (9) | X | X | | 119 |
| | K (10) | X | | | 251 |
| OHO OHO | L (11) | | X | | 252 |
| | M (12) | | | X | 253 |
| OHO OHO | N (13) | X | | | 148 |
| | P (14) | | X | | 148 |
| OHO OHO | Q (15) | | | X | 148 |
| | R (16) | | | X | STAGE |
| OHO OHO | S (17) | | | X | STAGE |
| | T (18) | | | X | 94 |

**S4**
**RECEIVER TANK - SELECTOR SWITCH**

| CONTACTS | | FST | FD1 | FD2 | FFT | LOCATION CKT. Nº |
|---|---|---|---|---|---|---|
| OHO OHO | A(1) | | X | | | 115 |
| | B(2) | | | X | | 115 |
| OHO OHO | C(3) | | | | X | 115 |
| | D(4) | X | | | | 115 |
| OHO OHO | E(5) | X | | | | 115 |
| | F(6) | | X | | | 115 |
| OHO OHO | G(7) | | | X | | 115 |
| | H(8) | | | | X | 115 |
| OHO OHO | J(9) | | X | X | X | 115 |
| | K(10) | X | | X | X | 115 |
| OHO OHO | L(11) | X | X | | X | 115 |
| | M(12) | X | X | X | | 115 |
| OHO OHO | N(13) | X | | | | 134 |
| | P(14) | | X | | | 115 |
| OHO OHO | Q(15) | | | X | | 115 |
| | R(16) | | | | X | 115 |
| OHO OHO | S(17) | X | | | | 115 |
| | T(18) | X | | | | 115 |
| OHO OHO | U(19) | X | | | | 115 |
| | V(20) | | | | | |

**S5**
**SUPPLY TANK - SELECTOR SWITCH**

| CONTACTS | | FST | FD1 | FD2 | FFT | LOCATION CKT. Nº |
|---|---|---|---|---|---|---|
| OHO OHO | A(1) | | X | | | 115 |
| | B(2) | | | X | | 115 |
| OHO OHO | C(3) | | | | X | 115 |
| | D(4) | X | | | | 115 |
| OHO OHO | E(5) | X | | | | 115 |
| | F(6) | | X | | | 115 |
| OHO OHO | G(7) | | | X | | 115 |
| | H(8) | | | | X | 115 |

**S7**
**NORMAL FUEL DRAIN SWITCH**

| CONTACTS | | OFF | FUEL DRAIN | LOCATION CKT. Nº |
|---|---|---|---|---|
| OHO OHO | A(1) | X | | 117 |
| | B(2) | X | | 118 |
| OHO OHO | C(3) | X | | 119 |
| | D(4) | X | | 151 |
| OHO OHO | E(5) | X | | 132 |
| | F(6) | X | | 133 |
| OHO OHO | G(7) | | X | 148 |
| | H(8) | | X | STAGE |
| OHO OHO | J(9) | X | | |
| | K(10) | X | | |

| REFERENCE DRAWINGS | NO. |
|---|---|
| AUX. PROCESS CONTROL SYSTEMS BLOCK DIAGRAM | D-HH-B-57298 |
| MASTER CONTROL BLOCK DIAGRAM SHEET 2 OF 2 | D-HH-B-57331 |
| COOLANT SALT SYSTEM BLOCK DIAGRAM | D-HH-B-57336 |
| ENG. ELEMENTARY MASTER CONTROL CIRCUITS SH. 1 OF 3 | D-HH-B-57318 |
| ENG. ELEMENTARY MASTER CONTROL CIRCUITS SH. 3 OF 3 | D-HH-B-57320 |

OAK RIDGE NATIONAL LABORATORY
OPERATED BY
UNION CARBIDE NUCLEAR COMPANY
DIVISION OF UNION CARBIDE CORPORATION
OAK RIDGE, TENNESSEE

MOLTEN SALT REACTOR EXPERIMENT WIRING DIAGRAM — BLDG. NO. 7503

ENGINEERING ELEMENTARY MASTER CONTROL CIRCUITS
SHEET 2 OF 3

SUBMITTED — APPROVED — APPROVED — APPROVED

D-HH B 57320 D REV.

120794RH497D G

| NO. | REVISIONS | DATE | APPD | APPD |
|---|---|---|---|---|
| H | D.C.N. # 3197 | 12-7-65 | | |
| C | DCN # 3182 | 9-16-65 | | |
| B | CHANGE NOTICE Nº 3047 | 3-2065 | | |
| A | CHANGE NOTICE # 2922 | 9-1-64 | | |

| DRAWN | DATE | SUBMITTED | DATE | APPROVED | DATE |
|---|---|---|---|---|---|
| R.E. SMITH | 10-31-63 | | | | |
| DESIGNED | DATE | APPROVED | DATE | APPROVED | DATE |
| | | | | | |
| CHECKED | DATE | APPROVED | DATE | APPROVED | DATE |
| | | | | | |

| | | | | |
|---|---|---|---|---|
| G | DCN # 3244 | 4-21-67 | | |
| E | DCN # 3240 | 1-4-67 | | |

NOTES:
1. TO ENTER OR LEAVE THE RST POSITION CLOSE SWITCH S13 (LOCATED ON MB13) TO ENERGIZE MAGNETIC LATCH.

LIMITS ON DIMENSIONS UNLESS OTHERWISE SPECIFIED:
FRACTIONS ±
DECIMALS ±
ANGLES ±
SCALE: NONE

MICROFILMED

Fig. 4.1.11. Engineering elementary, master control circuits, sheet 2 of 3.

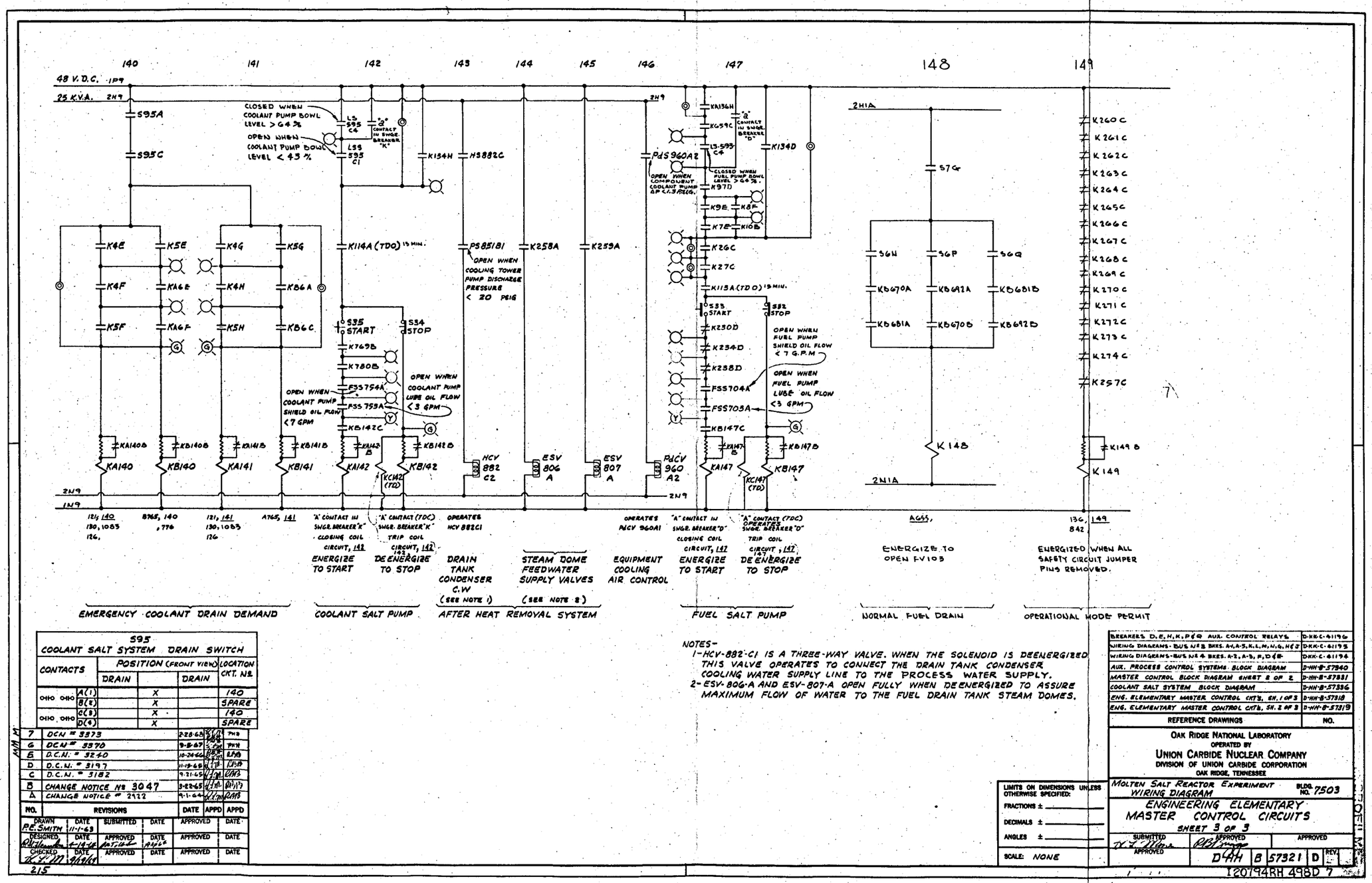


595
COOLANT SALT SYSTEM DRAIN SWITCH

| CONTACTS | | POSITION (FRONT VIEW) DRAIN | | DRAIN | LOCATION CKT. Nº |
|---|---|---|---|---|---|
| 010 010 | A(1) | | X | | 140 |
| | B(2) | | X | | SPARE |
| | C(3) | | X | | 140 |
| 010, 010 | D(4) | | X | | SPARE |

| NO. | REVISIONS | DATE | APPD | APPD |
|---|---|---|---|---|
| 7 | DCN # 3373 | 2-28-68 | | |
| G | DCN # 3370 | 9-8-67 | | |
| E | D.C.N. # 3240 | 10-24-66 | | |
| D | D.C.N. # 3197 | 11-15-66 | | |
| C | D.C.N. # 3182 | 9-21-66 | | |
| B | CHANGE NOTICE Nº 3047 | 3-22-65 | | |
| A | CHANGE NOTICE # 2922 | 9-1-64 | | |

| DRAWN | DATE | SUBMITTED | DATE | APPROVED | DATE |
|---|---|---|---|---|---|
| R.E. SMITH | 11-1-63 | | | | |
| DESIGNED | DATE | APPROVED | DATE | APPROVED | DATE |
| | 4-19-66 | | | | |
| CHECKED | DATE | APPROVED | DATE | APPROVED | DATE |
| | 4/19/66 | | | | |

NOTES-
1-HCV-882-C1 IS A THREE-WAY VALVE. WHEN THE SOLENOID IS DEENERGIZED THIS VALVE OPERATES TO CONNECT THE DRAIN TANK CONDENSER COOLING WATER SUPPLY LINE TO THE PROCESS WATER SUPPLY.
2-ESV-806-A AND ESV-807-A OPEN FULLY WHEN DEENERGIZED TO ASSURE MAXIMUM FLOW OF WATER TO THE FUEL DRAIN TANK STEAM DOMES.

| REFERENCE DRAWINGS | NO. |
|---|---|
| BREAKERS D, E, H, K, P & Q AUX. CONTROL RELAYS | D-KK-C-41196 |
| WIRING DIAGRAMS - BUS Nº 3 BKRS. A-1, A-5, K, L, M, N, G, H & J | D-KK-C-61195 |
| WIRING DIAGRAMS - BUS Nº 4 BKRS. A-2, A-3, F, D & E | D-KK-C-61194 |
| AUX. PROCESS CONTROL SYSTEMS BLOCK DIAGRAM | D-HH-B-57840 |
| MASTER CONTROL BLOCK DIAGRAM SHEET 2 OF 2 | D-HH-B-57831 |
| COOLANT SALT SYSTEM BLOCK DIAGRAM | D-HH-B-57836 |
| ENG. ELEMENTARY MASTER CONTROL CKT'S, SH. 1 OF 3 | D-HH-B-57818 |
| ENG. ELEMENTARY MASTER CONTROL CKT'S, SH. 2 OF 3 | D-HH-B-57819 |

OAK RIDGE NATIONAL LABORATORY
OPERATED BY
UNION CARBIDE NUCLEAR COMPANY
DIVISION OF UNION CARBIDE CORPORATION
OAK RIDGE, TENNESSEE

LIMITS ON DIMENSIONS UNLESS OTHERWISE SPECIFIED:
FRACTIONS ±
DECIMALS ±
ANGLES ±
SCALE: NONE

MOLTEN SALT REACTOR EXPERIMENT
WIRING DIAGRAM
SLDG. NO. 7503

ENGINEERING ELEMENTARY
MASTER CONTROL CIRCUITS
SHEET 3 OF 3

SUBMITTED | APPROVED | APPROVED
APPROVED

D4H B 57321 D REV.

120794RH 498D 7

Fig. 4.1.12. Engineering elementary, master control circuits, sheet 3 of 3.

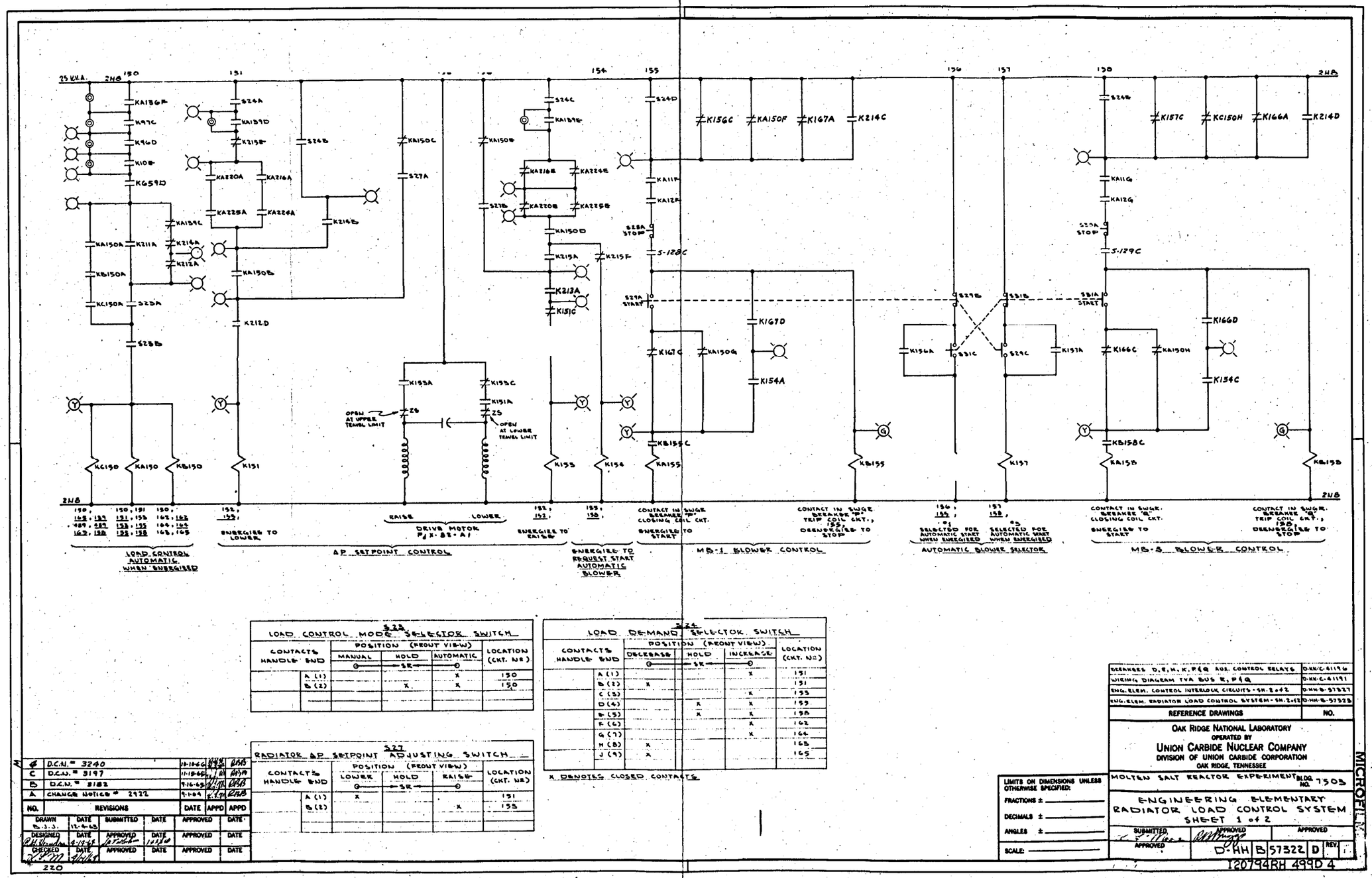


LOAD CONTROL MODE S23 SELECTOR SWITCH

| CONTACTS HANDLE END | | POSITION (FRONT VIEW) MANUAL | HOLD | AUTOMATIC | LOCATION (CKT. NO.) |
|---|---|---|---|---|---|
| | A (1) | | | X | 150 |
| | B (2) | | X | X | 150 |

LOAD DEMAND S24 SELECTOR SWITCH

| CONTACTS HANDLE END | | POSITION (FRONT VIEW) DECREASE | HOLD | INCREASE | LOCATION (CKT. NO.) |
|---|---|---|---|---|---|
| | A (1) | | | X | 151 |
| | B (2) | X | | | 151 |
| | C (3) | | | X | 153 |
| | D (4) | | X | X | 153 |
| | E (5) | | X | X | 158 |
| | F (6) | | | X | 162 |
| | G (7) | | | X | 164 |
| | H (8) | X | | | 165 |
| | J (9) | X | | | 165 |

X DENOTES CLOSED CONTACTS

RADIATOR ΔP SETPOINT S27 ADJUSTING SWITCH

| CONTACTS HANDLE END | | POSITION (FRONT VIEW) LOWER | HOLD | RAISE | LOCATION (CKT. NO.) |
|---|---|---|---|---|---|
| | A (1) | X | | | 151 |
| | B (2) | | | X | 155 |

Fig. 4.1.13. Engineering elementary, radiator load control system, sheet 1 of 2.

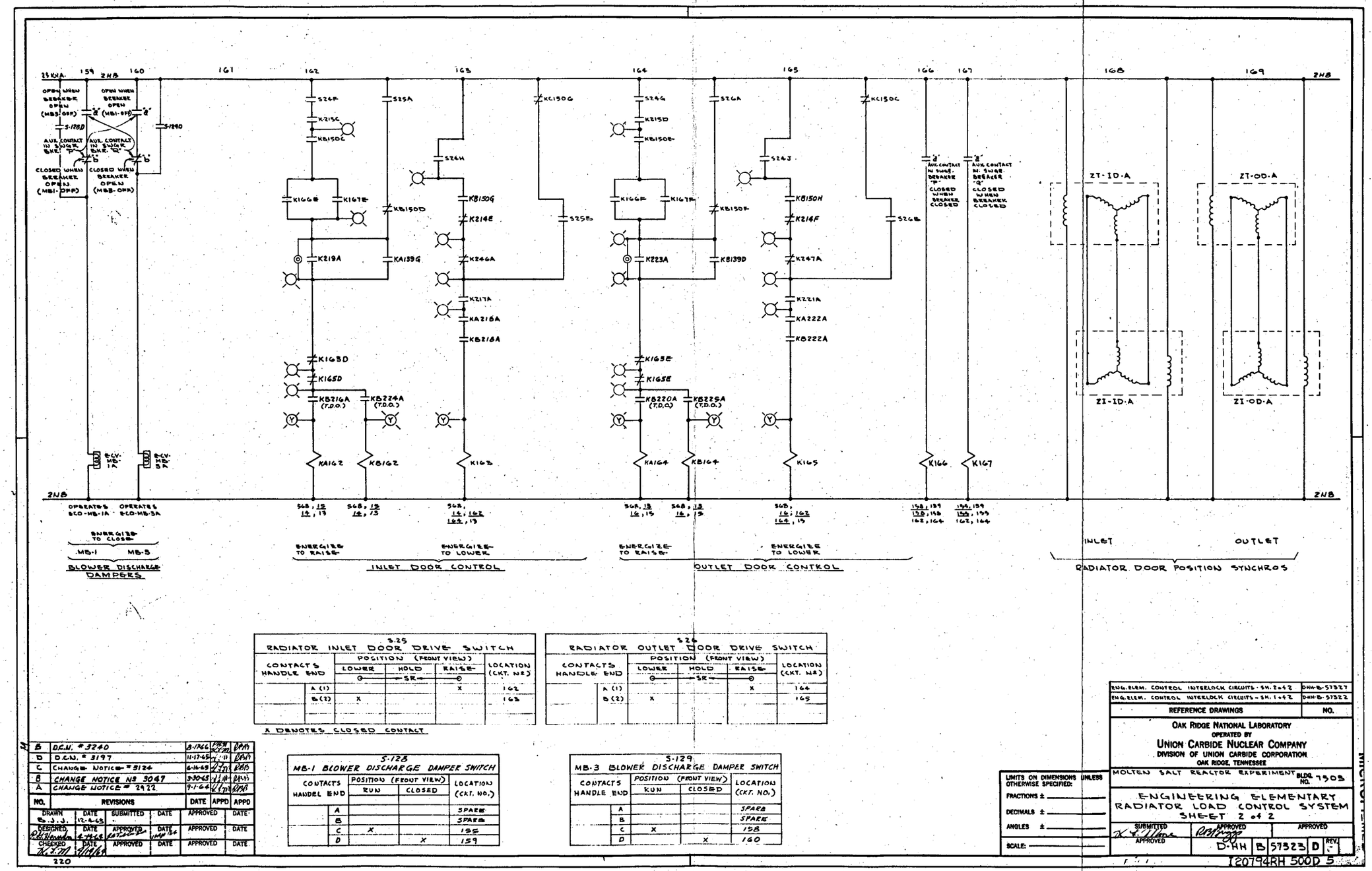


S-25
RADIATOR INLET DOOR DRIVE SWITCH

| CONTACTS HANDLE END | | POSITION (FRONT VIEW) LOWER | HOLD | RAISE | LOCATION (CKT. NO.) |
|---|---|---|---|---|---|
| | | ⊖ | —SR— | ⊖ | |
| | A (1) | | | X | 162 |
| | B (2) | X | | | 163 |

A DENOTES CLOSED CONTACT

S-26
RADIATOR OUTLET DOOR DRIVE SWITCH

| CONTACTS HANDLE END | | POSITION (FRONT VIEW) LOWER | HOLD | RAISE | LOCATION (CKT. NO.) |
|---|---|---|---|---|---|
| | | ⊖ | —SR— | ⊖ | |
| | A (1) | | | X | 164 |
| | B (2) | X | | | 165 |

S-128
MB-1 BLOWER DISCHARGE DAMPER SWITCH

| CONTACTS HANDEL END | | POSITION (FRONT VIEW) RUN | CLOSED | LOCATION (CKT. NO.) |
|---|---|---|---|---|
| | A | | | SPARE |
| | B | | | SPARE |
| | C | X | | 155 |
| | D | | X | 159 |

S-129
MB-3 BLOWER DISCHARGE DAMPER SWITCH

| CONTACTS HANDLE END | | POSITION (FRONT VIEW) RUN | CLOSED | LOCATION (CKT. NO.) |
|---|---|---|---|---|
| | A | | | SPARE |
| | B | | | SPARE |
| | C | X | | 158 |
| | D | | X | 160 |

| NO. | REVISIONS | DATE | APPD | APPD |
|---|---|---|---|---|
| B | D.C.N. # 3240 | 8-17-66 | | |
| D | D.C.N. # 3197 | 11-17-65 | | |
| C | CHANGE NOTICE # 3124 | 6-16-65 | | |
| B | CHANGE NOTICE Nº 3047 | 3-30-65 | | |
| A | CHANGE NOTICE # 2922 | 9-1-64 | | |

| DRAWN | DATE | SUBMITTED | DATE | APPROVED | DATE |
|---|---|---|---|---|---|
| B. J. J. | 12-2-63 | | | | |
| DESIGNED | DATE | APPROVED | DATE | APPROVED | DATE |
| | 4-14-65 | | | | |
| CHECKED | DATE | APPROVED | DATE | APPROVED | DATE |
| | 8/14/68 | | | | |

220

| REFERENCE DRAWINGS | NO. |
|---|---|
| ENG. ELEM. CONTROL INTERLOCK CIRCUITS - SH. 2 of 2 | DWG-B-57327 |
| ENG. ELEM. CONTROL INTERLOCK CIRCUITS - SH. 1 of 2 | DWG-B-57322 |

OAK RIDGE NATIONAL LABORATORY
OPERATED BY
UNION CARBIDE NUCLEAR COMPANY
DIVISION OF UNION CARBIDE CORPORATION
OAK RIDGE, TENNESSEE

MOLTEN SALT REACTOR EXPERIMENT — BLDG. NO. 7503

ENGINEERING ELEMENTARY
RADIATOR LOAD CONTROL SYSTEM
SHEET 2 of 2

LIMITS ON DIMENSIONS UNLESS OTHERWISE SPECIFIED:
FRACTIONS ±
DECIMALS ±
ANGLES ±
SCALE:

SUBMITTED — APPROVED — APPROVED

D-RH B 57323 D REV.

120794RH 500D 5

Fig. 4.1.14. Engineering elementary, radiator load control system, sheet 2 of 2.

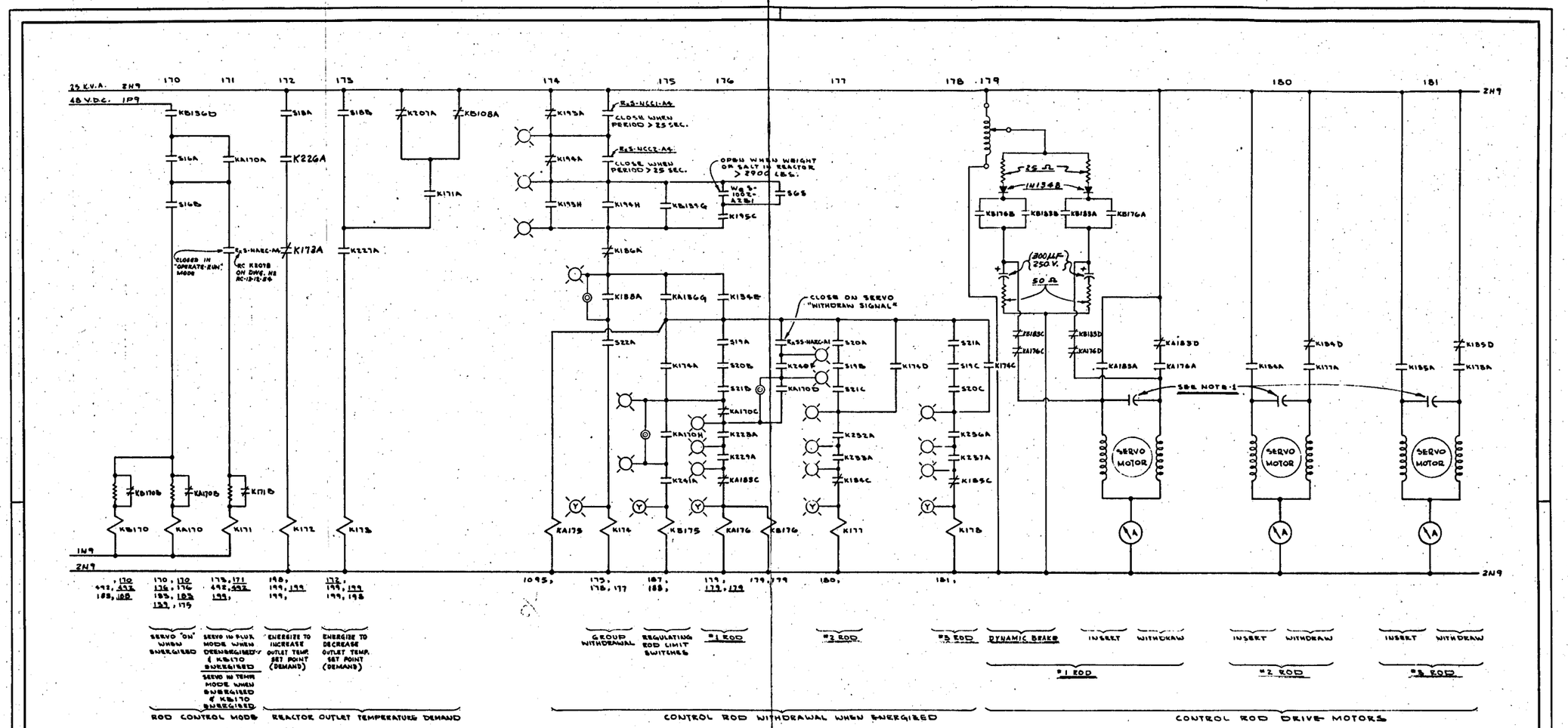


**S16 ROD SERVO MODE SELECTOR SWITCH**

| CONTACTS HANDLE END | | POSITION (FRONT VIEW) MANUAL-OFF | HOLD | SERVO-ON | LOCATION (CKT. NO.) |
|---|---|---|---|---|---|
| | A (1) | | | X | 170 |
| | B (2) | | X | X | 170 |

**S18 REACTOR OUTLET TEMPERATURE DEMAND SWITCH**

| CONTACTS HANDLE END | | POSITION (FRONT VIEW) DECREASE | OFF | INCREASE | LOCATION (CKT. NO.) |
|---|---|---|---|---|---|
| | A (1) | | | X | 172 |
| | B (2) | X | | | 173 |

**S19 SHIM ROD #1 ACTUATOR SWITCH**

| CONTACTS HANDLE END | | POSITION (FRONT VIEW) INSERT | OFF | WITHDRAW | LOCATION (CKT. NO.) |
|---|---|---|---|---|---|
| | A (1) | | | X | 176 |
| | B (2) | | X | | 177 |
| | C (3) | | X | | 178 |
| | D (4) | X | | | 183 |

**S21 SHIM ROD #3 ACTUATOR SWITCH**

| CONTACTS HANDLE END | | POSITION (FRONT VIEW) INSERT | OFF | WITHDRAW | LOCATION (CKT. NO.) |
|---|---|---|---|---|---|
| | A (1) | | | X | 178 |
| | B (2) | | X | | 176 |
| | C (3) | | X | | 177 |
| | D (4) | X | | | 183 |

**S20 SHIM ROD #2 ACTUATOR SWITCH**

| CONTACTS HANDLE END | | POSITION (FRONT VIEW) INSERT | OFF | WITHDRAW | LOCATION (CKT. NO.) |
|---|---|---|---|---|---|
| | A (1) | | | X | 177 |
| | B (2) | | X | | 176 |
| | C (3) | | X | | 178 |
| | D (4) | X | | | 184 |

NOTE-1:
PHASE SPLITTING CAPACITOR TO BE OIL-FILLED PAPER AND RATED AT 300 V.A.C.; CAPACITOR TO MEET REQUIREMENTS ON CONTROL ROD DRIVE SERVO MOTOR NAME-PLATE.

| NO. | REVISIONS | DATE | APPD | APPD |
|---|---|---|---|---|
| G | DCN # 3244 | 4-21-67 | | |
| B | DCN # 3240 | 7-6-66 | | |
| D | DCN # 3197 | 11-10-65 | | |
| C | DCN # 3182 | 9-16-65 | | |
| B | CHANGE NOTICE NO 3047 | 3-30-65 | | |
| A | CHANGE NOTICE # 2972 | 4-1-64 | | |

| DRAWN | DATE | SUBMITTED | DATE | APPROVED | DATE |
|---|---|---|---|---|---|
| | 12-5-63 | | | | |
| DESIGNED | DATE | APPROVED | DATE | APPROVED | DATE |
| | 4-15-63 | | | | |
| CHECKED | DATE | APPROVED | DATE | APPROVED | DATE |
| | | | | | |

221

| REFERENCE DRAWINGS | NO. |
|---|---|
| ENG. ELEM. CONTROL INTERLOCK CIRCUITS - SH. 2 of 2 | D-HH-B-57327 |
| ENG. ELEM. ROD CONTROL CIRCUITS - SH. 2 of 2 | D-HH-B-57325 |

OAK RIDGE NATIONAL LABORATORY
OPERATED BY
UNION CARBIDE NUCLEAR COMPANY
DIVISION OF UNION CARBIDE CORPORATION
OAK RIDGE, TENNESSEE

MOLTEN SALT REACTOR EXPERIMENT BLDG. NO. 7503

ENGINEERING ELEMENTARY
ROD CONTROL CIRCUITS
SHEET 1 of 3

SUBMITTED | APPROVED | APPROVED | APPROVED

D-HH B 57324 D REV. B

120794RH 501D 5

LIMITS ON DIMENSIONS UNLESS OTHERWISE SPECIFIED:
FRACTIONS ±
DECIMALS ±
ANGLES ±
SCALE:

MICROFILMED

Fig. 4.1.15. Engineering elementary, rod control circuits, sheet 1 of 3.

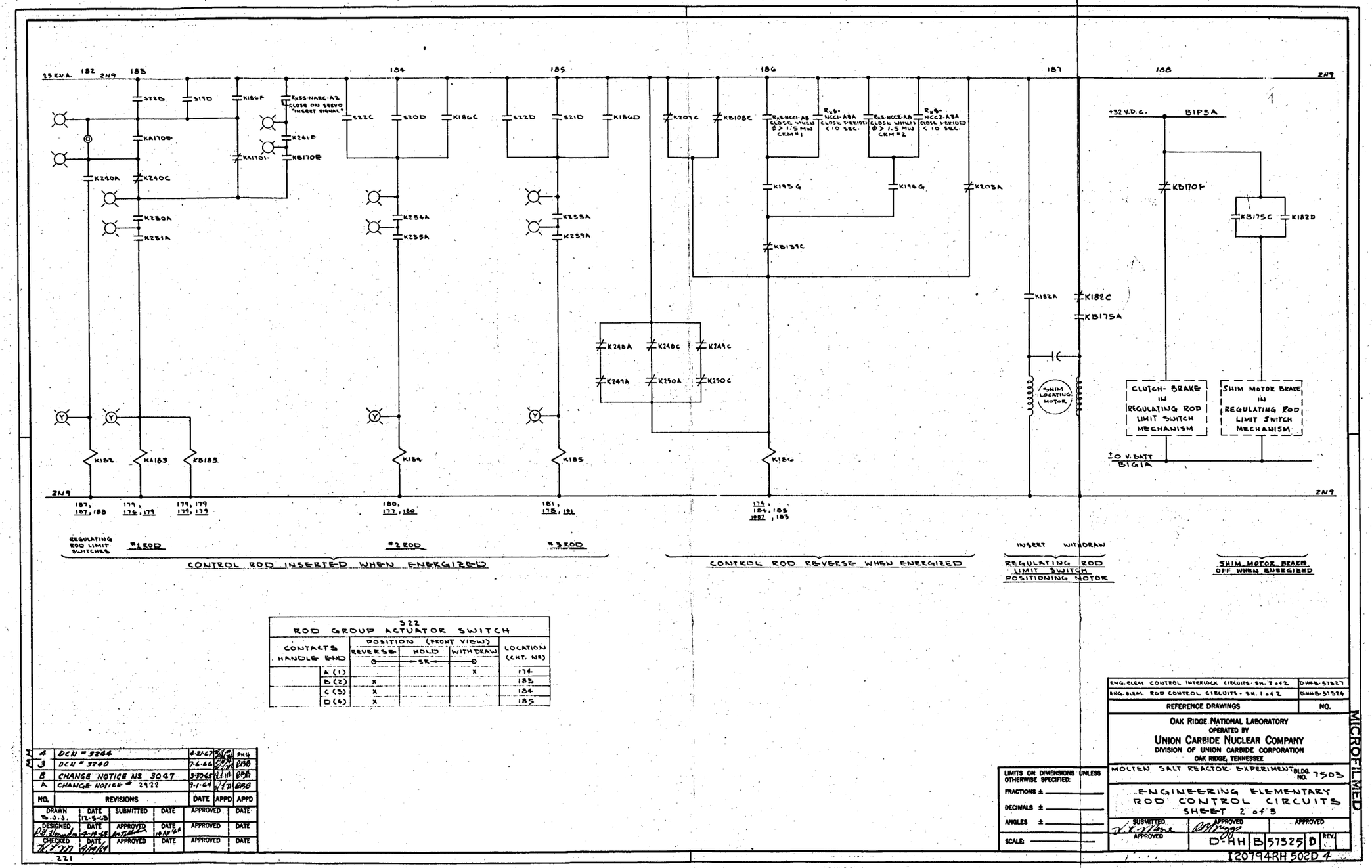


| 522 ROD GROUP ACTUATOR SWITCH | | | | | |
|---|---|---|---|---|---|
| CONTACTS HANDLE END | | POSITION (FRONT VIEW) REVERSE | HOLD | WITHDRAW | LOCATION (CKT. No) |
| | | ⊖ | SR | ⊖ | |
| | A (1) | | | X | 174 |
| | B (2) | X | | | 183 |
| | C (3) | X | | | 184 |
| | D (4) | X | | | 185 |

| NO. | REVISIONS | DATE | APPD | APPD |
|---|---|---|---|---|
| 4 | DCN # 3244 | 4-21-67 | | PHH |
| 3 | DCN # 3240 | 7-6-66 | | DPB |
| B | CHANGE NOTICE No 3047 | 3-30-65 | | DPB |
| A | CHANGE NOTICE # 2972 | 9-1-64 | | DPB |

| DRAWN | DATE | SUBMITTED | DATE | APPROVED | DATE |
|---|---|---|---|---|---|
| B.J.J. | 12-5-63 | | | | |
| DESIGNED | DATE | APPROVED | DATE | APPROVED | DATE |
| | 2-14-68 | | 10-14-68 | | |
| CHECKED | DATE | APPROVED | DATE | APPROVED | DATE |
| | 9/4/68 | | | | |

221

| REFERENCE DRAWINGS | NO. |
|---|---|
| ENG. ELEM. CONTROL INTERLOCK CIRCUITS - SH. 2 of 2 | D-HH-B-57527 |
| ENG. ELEM. ROD CONTROL CIRCUITS - SH. 1 of 2 | D-HH-B-57524 |

OAK RIDGE NATIONAL LABORATORY
OPERATED BY
UNION CARBIDE NUCLEAR COMPANY
DIVISION OF UNION CARBIDE CORPORATION
OAK RIDGE, TENNESSEE

MOLTEN SALT REACTOR EXPERIMENT BLDG. NO. 7503

ENGINEERING ELEMENTARY
ROD CONTROL CIRCUITS
SHEET 2 of 3

SUBMITTED | APPROVED | APPROVED | APPROVED

D-HH B 57525 D REV.

LIMITS ON DIMENSIONS UNLESS OTHERWISE SPECIFIED:
FRACTIONS ±
DECIMALS ±
ANGLES ±
SCALE:

I20794RH 502D 4

MICROFILMED

Fig. 4.1.16. Engineering elementary, rod control circuits, sheet 2 of 3.

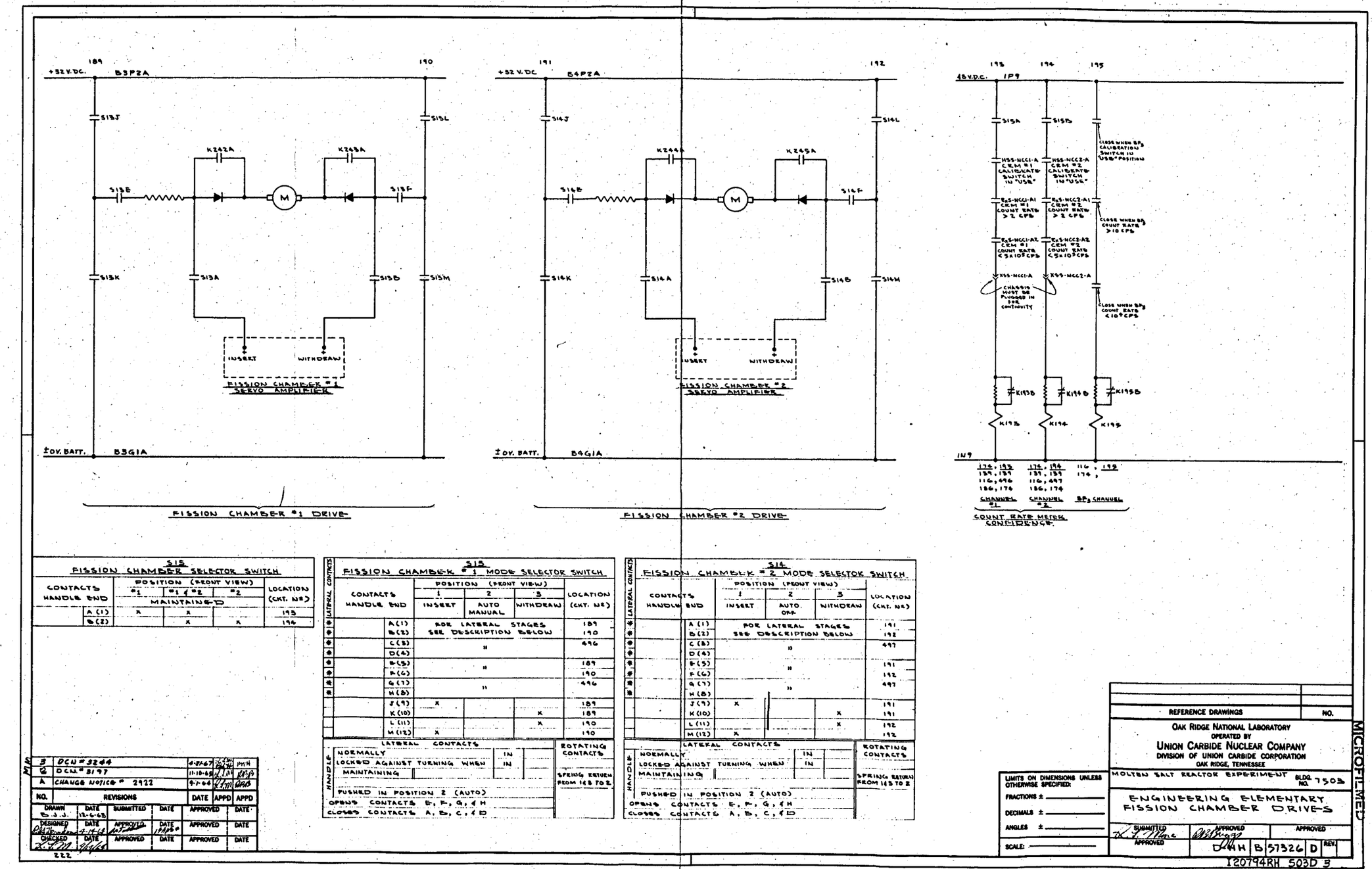


Fig. 4.1.17. Engineering elementary, fission chamber drives.

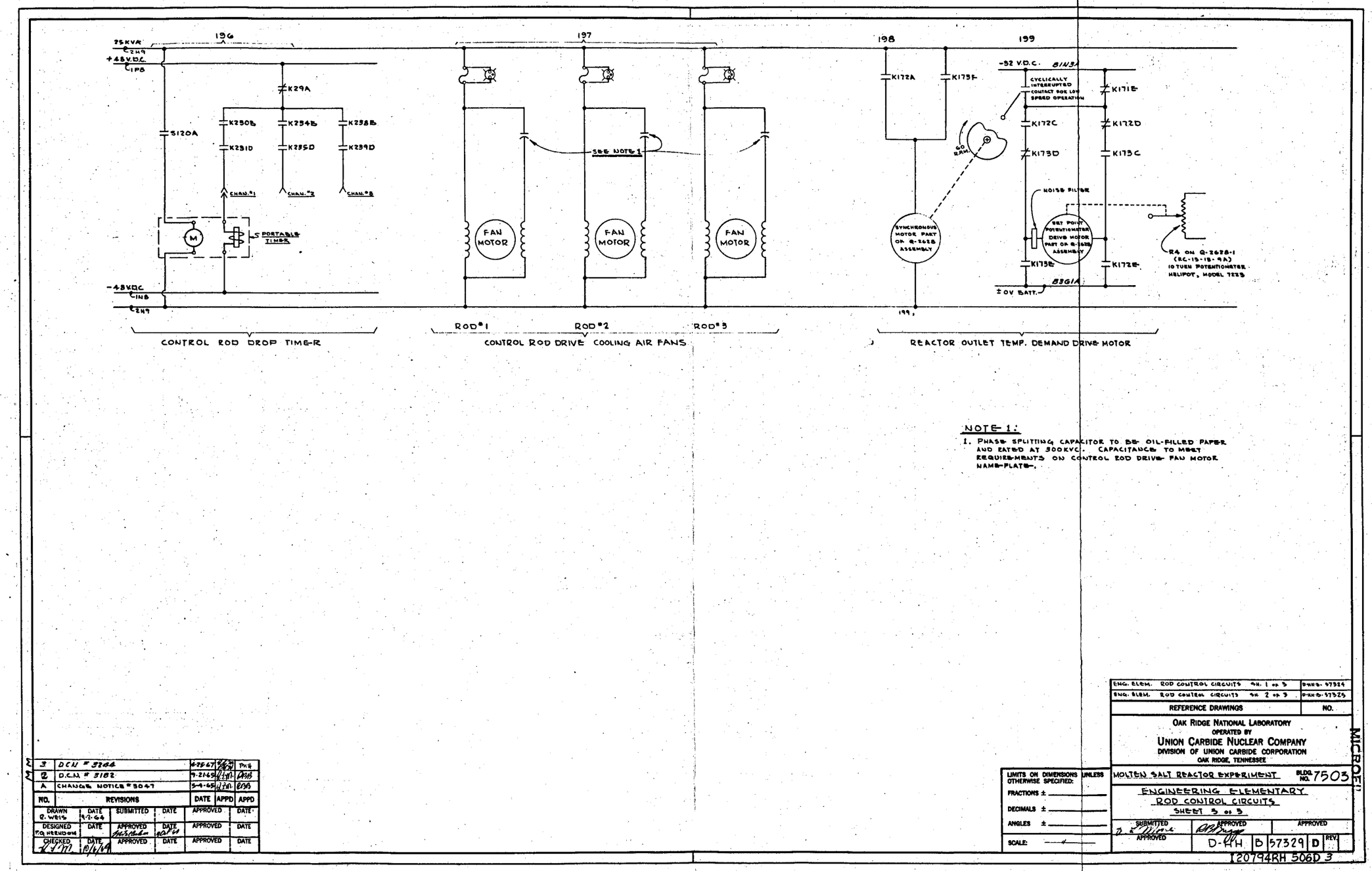


NOTE 1:

1. PHASE SPLITTING CAPACITOR TO BE OIL-FILLED PAPER AND RATED AT 300KVC. CAPACITANCE TO MEET REQUIREMENTS ON CONTROL ROD DRIVE FAN MOTOR NAME-PLATE.

| NO. | REVISIONS | DATE | APPD | APPD |
|---|---|---|---|---|
| 3 | DCN # 3244 | 4-27-67 | PHB | |
| 2 | D.C.N. # 3182 | 9-21-65 | | |
| A | CHANGE NOTICE # 3047 | 5-4-65 | | |

| | | | | | |
|---|---|---|---|---|---|
| DRAWN R. WEIS | DATE 9-2-64 | SUBMITTED | DATE | APPROVED | DATE |
| DESIGNED T.Q. HERNDON | DATE | APPROVED | DATE 10/1/64 | APPROVED | DATE |
| CHECKED | DATE 10/6/64 | APPROVED | DATE | APPROVED | DATE |

LIMITS ON DIMENSIONS UNLESS OTHERWISE SPECIFIED:
FRACTIONS ±
DECIMALS ±
ANGLES ±
SCALE:

| REFERENCE DRAWINGS | NO. |
|---|---|
| ENG. ELEM. ROD CONTROL CIRCUITS SH. 1 of 3 | D-HB-57324 |
| ENG. ELEM. ROD CONTROL CIRCUITS SH. 2 of 3 | D-HB-57325 |

OAK RIDGE NATIONAL LABORATORY
OPERATED BY
UNION CARBIDE NUCLEAR COMPANY
DIVISION OF UNION CARBIDE CORPORATION
OAK RIDGE, TENNESSEE

MOLTEN SALT REACTOR EXPERIMENT BLDG. NO. 7503

ENGINEERING ELEMENTARY
ROD CONTROL CIRCUITS
SHEET 3 of 3

SUBMITTED APPROVED | APPROVED | APPROVED

D-HH | B | 57329 | D | REV.

I20794RH 506D 3

MICROFILM

Fig. 4.1.18. Engineering elementary, rod control circuits, sheet 3 of 3.

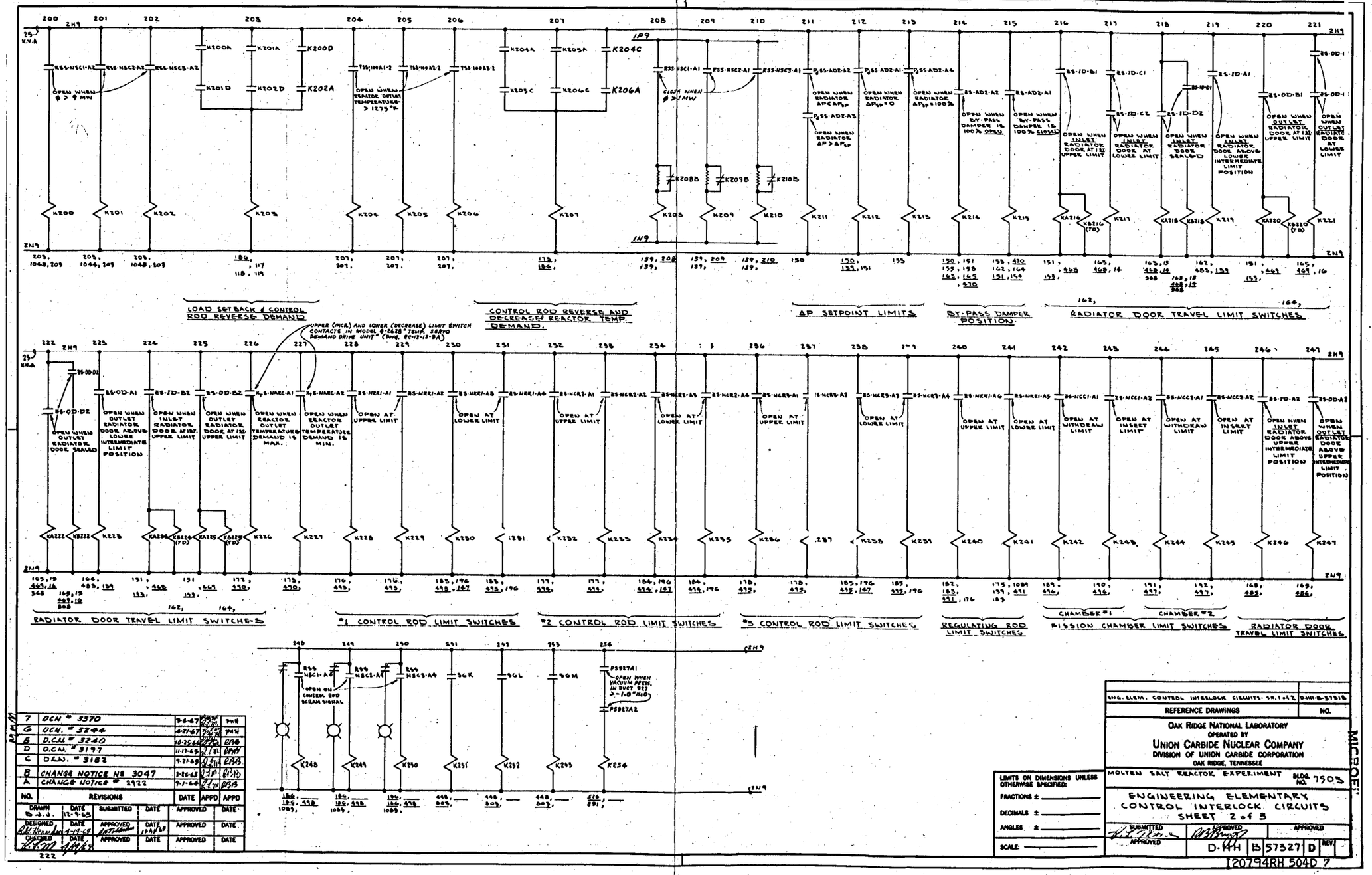


Fig. 4.1.19. Engineering elementary, control interlock circuits, sheet 2 of 3.

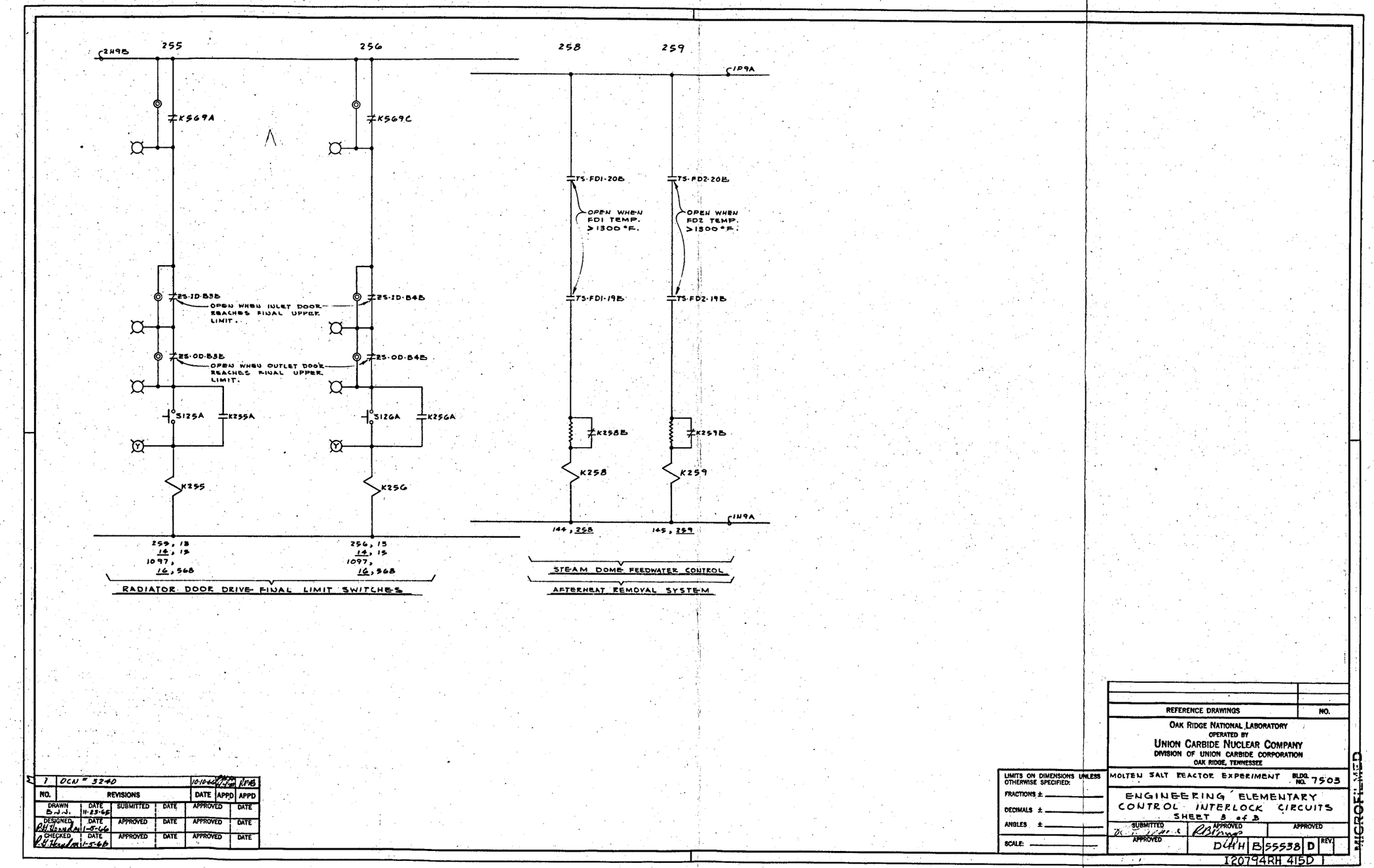


Fig. 4.1.20. Engineering elementary, control interlock circuits, sheet 3 of 3.

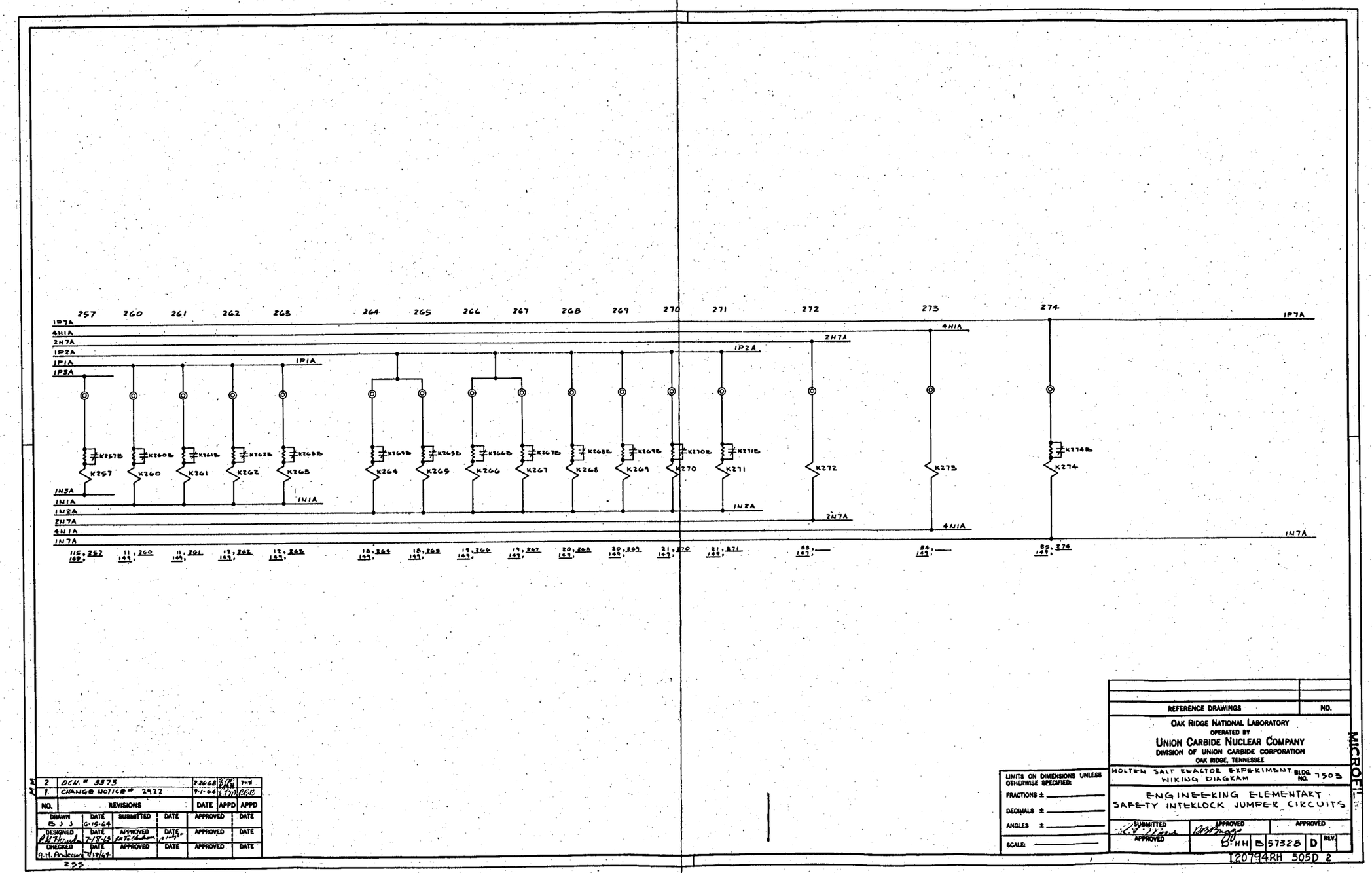


Fig. 4.1.21. Engineering elementary, safety interlock jumper circuits.

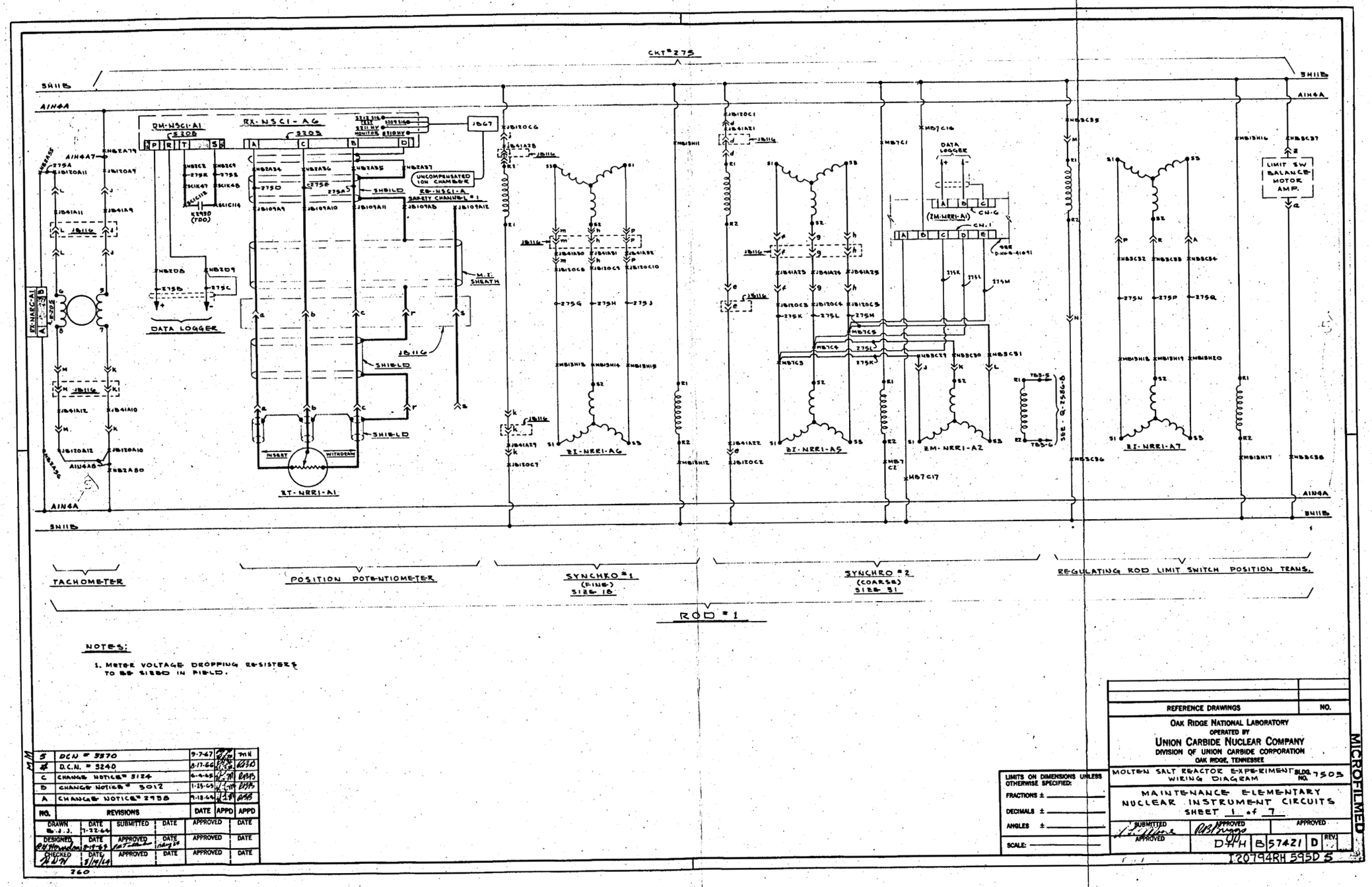


NOTES:

1. METER VOLTAGE DROPPING RESISTERS TO BE SIZED IN FIELD.

| NO. | REVISIONS | DATE | APPD | APPD |
|---|---|---|---|---|
| 5 | DCN # 3370 | 9-7-67 | | |
| B | D.C.N. # 3240 | 8-17-66 | | |
| C | CHANGE NOTICE # 3124 | 6-4-65 | | |
| D | CHANGE NOTICE # 3012 | 1-25-65 | | |
| A | CHANGE NOTICE # 2958 | 9-18-64 | | |

| DRAWN | DATE | SUBMITTED | DATE | APPROVED | DATE |
|---|---|---|---|---|---|
| B.J.J. | 7-22-64 | | | | |
| DESIGNED | DATE | APPROVED | DATE | APPROVED | DATE |
| | 8-17-64 | | | | |
| CHECKED | DATE | APPROVED | DATE | APPROVED | DATE |
| | 7/14/64 | | | | |

LIMITS ON DIMENSIONS UNLESS OTHERWISE SPECIFIED:
FRACTIONS ±
DECIMALS ±
ANGLES ±
SCALE:

REFERENCE DRAWINGS | NO.

OAK RIDGE NATIONAL LABORATORY
OPERATED BY
UNION CARBIDE NUCLEAR COMPANY
DIVISION OF UNION CARBIDE CORPORATION
OAK RIDGE, TENNESSEE

MOLTEN SALT REACTOR EXPERIMENT WIRING DIAGRAM — BLDG. NO. 7503

MAINTENANCE ELEMENTARY NUCLEAR INSTRUMENT CIRCUITS
SHEET 1 of 7

SUBMITTED | APPROVED | APPROVED | APPROVED

D-4H B 57421 D REV.

I20794RH595D5

MICROFILMED

Fig. 4.1.22. Maintenance elementary–nuclear instrument circuits, sheet 1 of 7.

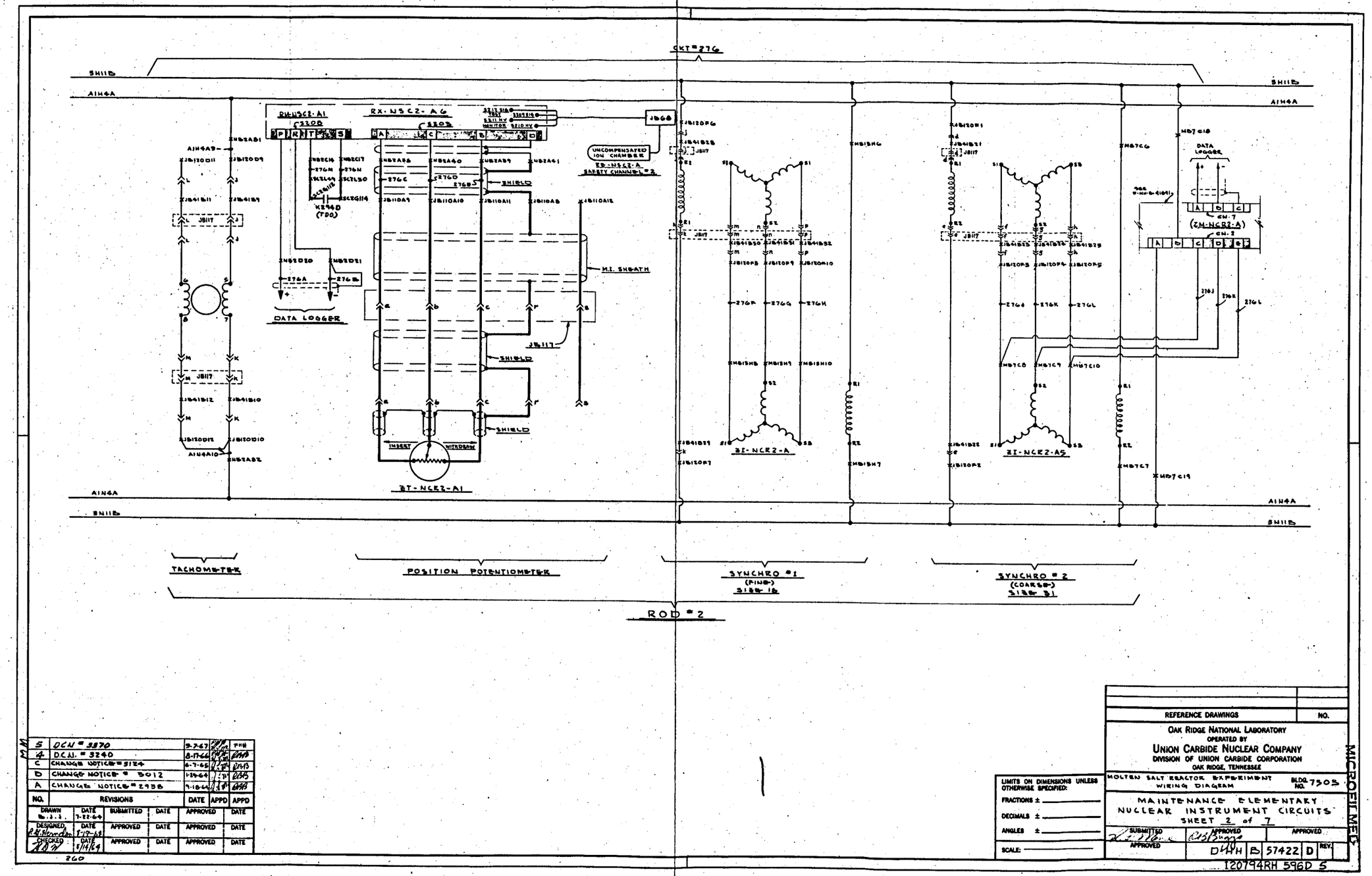


| NO. | REVISIONS | DATE | APPD | APPD |
|---|---|---|---|---|
| 5 | OCN # 3870 | 9-7-67 | | |
| 4 | D.C.N. # 3240 | 8-17-66 | | |
| C | CHANGE NOTICE # 3124 | 6-7-65 | | |
| B | CHANGE NOTICE # 3012 | 1-14-64 | | |
| A | CHANGE NOTICE # 2938 | 9-18-64 | | |

| DRAWN | DATE | SUBMITTED | DATE | APPROVED | DATE |
|---|---|---|---|---|---|
| D. J. J. | 7-22-64 | | | | |
| DESIGNED | DATE | APPROVED | DATE | APPROVED | DATE |
| R. E. Norman | 7-17-68 | | | | |
| CHECKED | DATE | APPROVED | DATE | APPROVED | DATE |
| | 6/14/64 | | | | |

LIMITS ON DIMENSIONS UNLESS OTHERWISE SPECIFIED:
FRACTIONS ±
DECIMALS ±
ANGLES ±
SCALE:

REFERENCE DRAWINGS | NO.

OAK RIDGE NATIONAL LABORATORY
OPERATED BY
UNION CARBIDE NUCLEAR COMPANY
DIVISION OF UNION CARBIDE CORPORATION
OAK RIDGE, TENNESSEE

MOLTEN SALT REACTOR EXPERIMENT WIRING DIAGRAM — BLDG. NO. 7503

MAINTENANCE ELEMENTARY NUCLEAR INSTRUMENT CIRCUITS
SHEET 2 of 7

SUBMITTED | APPROVED | APPROVED | APPROVED

D4H B 57422 D REV.

120794RH 596D 5

MICROFILMED

Fig. 4.1.23. Maintenance elementary–nuclear instrument circuits, sheet 2 of 7.

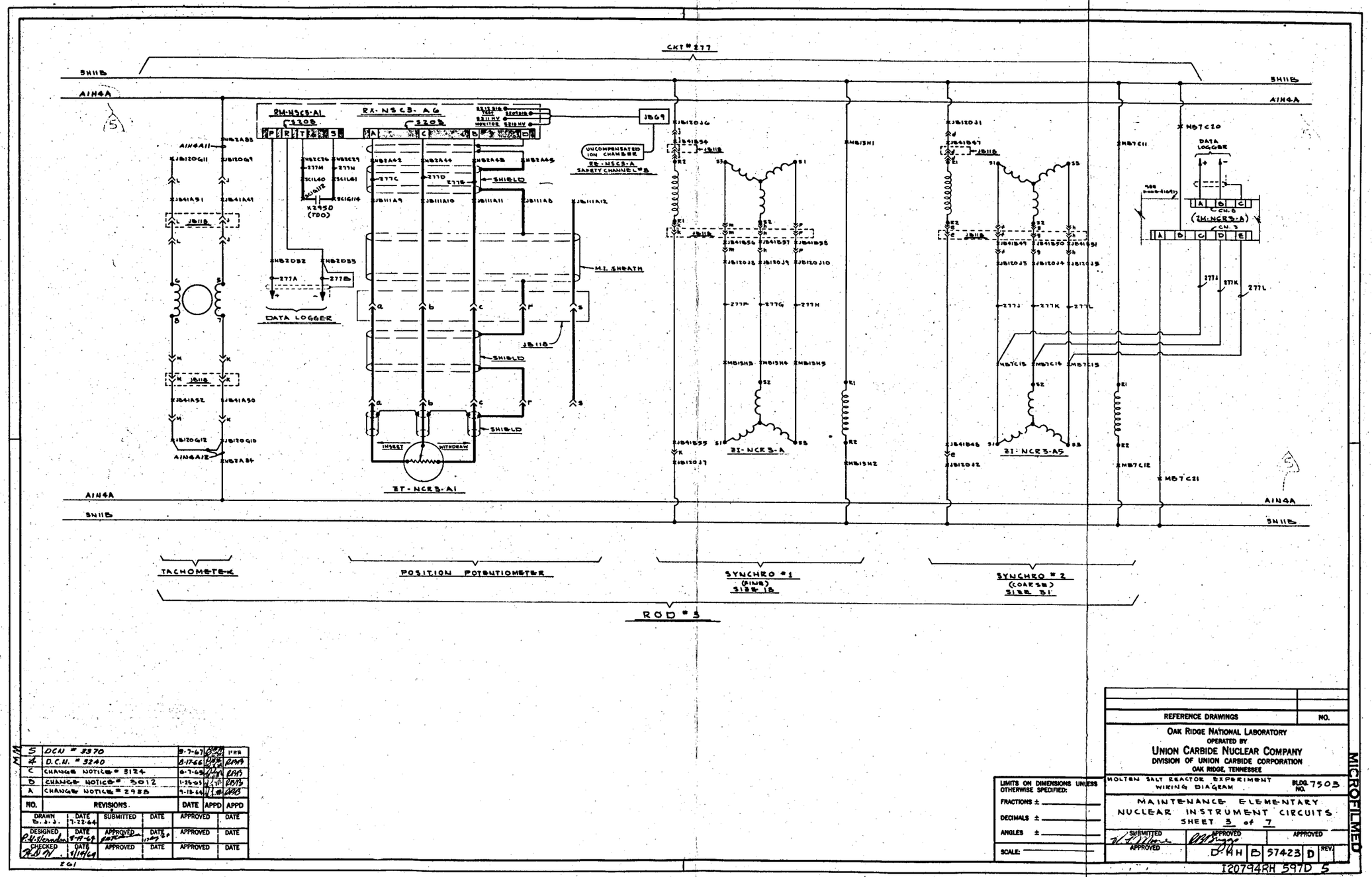


| NO. | REVISIONS | DATE | APPD | APPD |
|---|---|---|---|---|
| 5 | DCN # 3370 | 9-7-67 | | |
| 4 | D.C.N. # 3240 | 8-17-66 | | |
| C | CHANGE NOTICE # 3124 | 6-7-66 | | |
| B | CHANGE NOTICE # 3012 | 1-25-65 | | |
| A | CHANGE NOTICE # 2988 | 7-13-64 | | |

| DRAWN | DATE | SUBMITTED | DATE | APPROVED | DATE |
|---|---|---|---|---|---|
| D.A.J. | 7-22-64 | | | | |
| DESIGNED | DATE | APPROVED | DATE | APPROVED | DATE |
| P.G. Herndon | 8-19-64 | | | | |
| CHECKED | DATE | APPROVED | DATE | APPROVED | DATE |
| | 8/19/64 | | | | |

LIMITS ON DIMENSIONS UNLESS OTHERWISE SPECIFIED:
FRACTIONS ±
DECIMALS ±
ANGLES ±
SCALE:

REFERENCE DRAWINGS | NO.

OAK RIDGE NATIONAL LABORATORY
OPERATED BY
UNION CARBIDE NUCLEAR COMPANY
DIVISION OF UNION CARBIDE CORPORATION
OAK RIDGE, TENNESSEE

MOLTEN SALT REACTOR EXPERIMENT WIRING DIAGRAM
BLDG. NO. 7503

MAINTENANCE ELEMENTARY NUCLEAR INSTRUMENT CIRCUITS
SHEET 3 of 7

SUBMITTED | APPROVED | APPROVED | APPROVED

D-4H B 57423 D REV.

I20794RH 597D 5

MICROFILMED

Fig. 4.1.24. Maintenance elementary, nuclear instrument circuits, sheet 3 of 7.

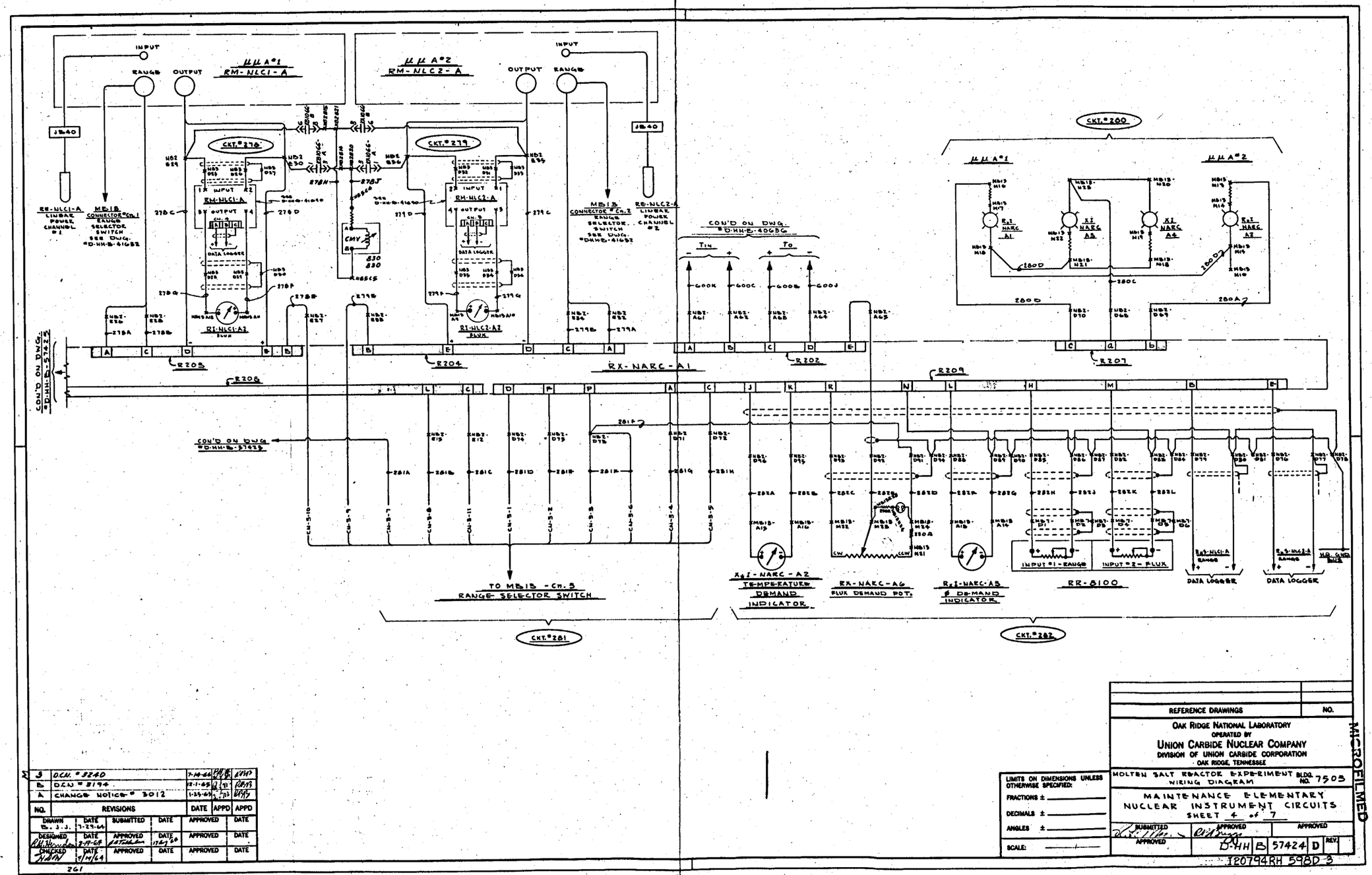


| NO. | REVISIONS | DATE | APPD | APPD |
|---|---|---|---|---|
| J | D.C.N. #3240 | 7-14-66 | | |
| B | D.C.N. #3194 | 12-1-65 | | |
| A | CHANGE NOTICE #3012 | 1-25-65 | | |

| DRAWN | DATE | SUBMITTED | DATE | APPROVED | DATE |
|---|---|---|---|---|---|
| B. J. J. | 7-29-64 | | | | |
| DESIGNED | DATE | APPROVED | DATE | APPROVED | DATE |
| | 2-19-68 | | | | |
| CHECKED | DATE | APPROVED | DATE | APPROVED | DATE |
| | 8/14/64 | | | | |

261

REFERENCE DRAWINGS | NO.

OAK RIDGE NATIONAL LABORATORY
OPERATED BY
UNION CARBIDE NUCLEAR COMPANY
DIVISION OF UNION CARBIDE CORPORATION
OAK RIDGE, TENNESSEE

MOLTEN SALT REACTOR EXPERIMENT WIRING DIAGRAM — BLDG. NO. 7503

MAINTENANCE ELEMENTARY NUCLEAR INSTRUMENT CIRCUITS
SHEET 4 of 7

LIMITS ON DIMENSIONS UNLESS OTHERWISE SPECIFIED:
FRACTIONS ±
DECIMALS ±
ANGLES ±
SCALE:

SUBMITTED | APPROVED | APPROVED | APPROVED

D-HH B 57424 D REV.

120794RH 598D-3

MICROFILMED

Fig. 4.1.25. Maintenance elementary, nuclear instrument circuits, sheet 4 of 7.

| S 17 SERVO FLUX CHANNEL SELECTOR | | | | |
|---|---|---|---|---|
| CONTACTS | | POSITION 1 | POSITION 2 | LOCATION CKT. NO. |
| | A(1) | X | | 284 |
| | B(2) | X | | 283 |
| | C(3) | X | | LOGGER |
| | D(4) | X | | 1066 |
| | E(5) | | X | 284 |
| | F(6) | | X | 283 |
| | G(7) | | X | 284 |
| | H(8) | | X | 1066 |

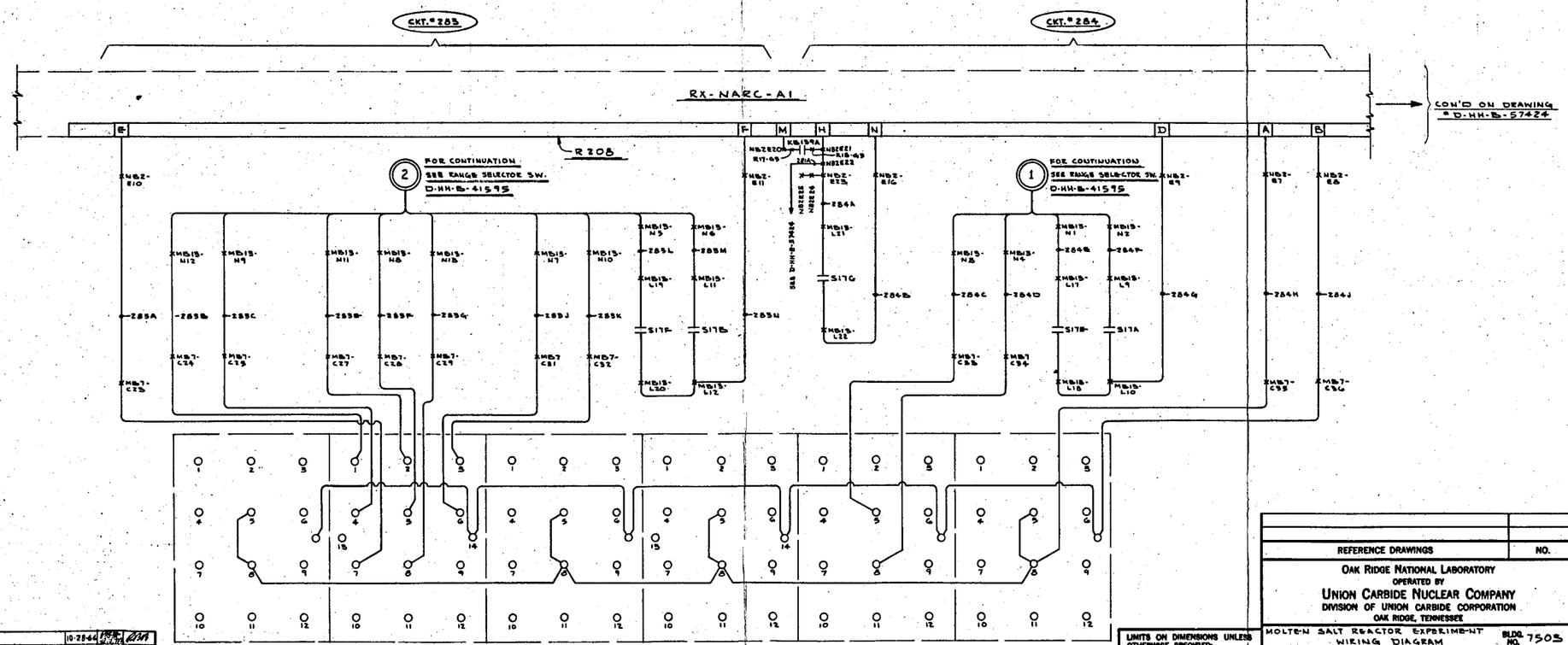


| NO. | REVISIONS | DATE | APPD | APPD |
|---|---|---|---|---|
| B | D.C.N. # 3240 | 10-28-64 | | |
| A | CHANGE NOTICE # 3012 | 1-29-64 | | |

| DRAWN | DATE | SUBMITTED | DATE | APPROVED | DATE |
|---|---|---|---|---|---|
| B.J.J. | 7-28-64 | | | | |
| DESIGNED | DATE | APPROVED | DATE | APPROVED | DATE |
| | 8-19-68 | | | | |
| CHECKED | DATE | APPROVED | DATE | APPROVED | DATE |
| | 8/10/69 | | | | |

LIMITS ON DIMENSIONS UNLESS OTHERWISE SPECIFIED:
FRACTIONS ±
DECIMALS ±
ANGLES ±
SCALE:

REFERENCE DRAWINGS | NO.

OAK RIDGE NATIONAL LABORATORY
OPERATED BY
UNION CARBIDE NUCLEAR COMPANY
DIVISION OF UNION CARBIDE CORPORATION
OAK RIDGE, TENNESSEE

MOLTEN SALT REACTOR EXPERIMENT WIRING DIAGRAM — BLDG. NO. 7503

MAINTENANCE ELEMENTARY NUCLEAR INSTRUMENT CIRCUITS
SHEET 5 of 7

SUBMITTED | APPROVED | APPROVED

D-HH B 57425 D REV.

T20794RH 599D 2

MICROFILMED

Fig. 4.1.26. Maintenance elementary, nuclear instrument circuits, sheet 5 of 7.

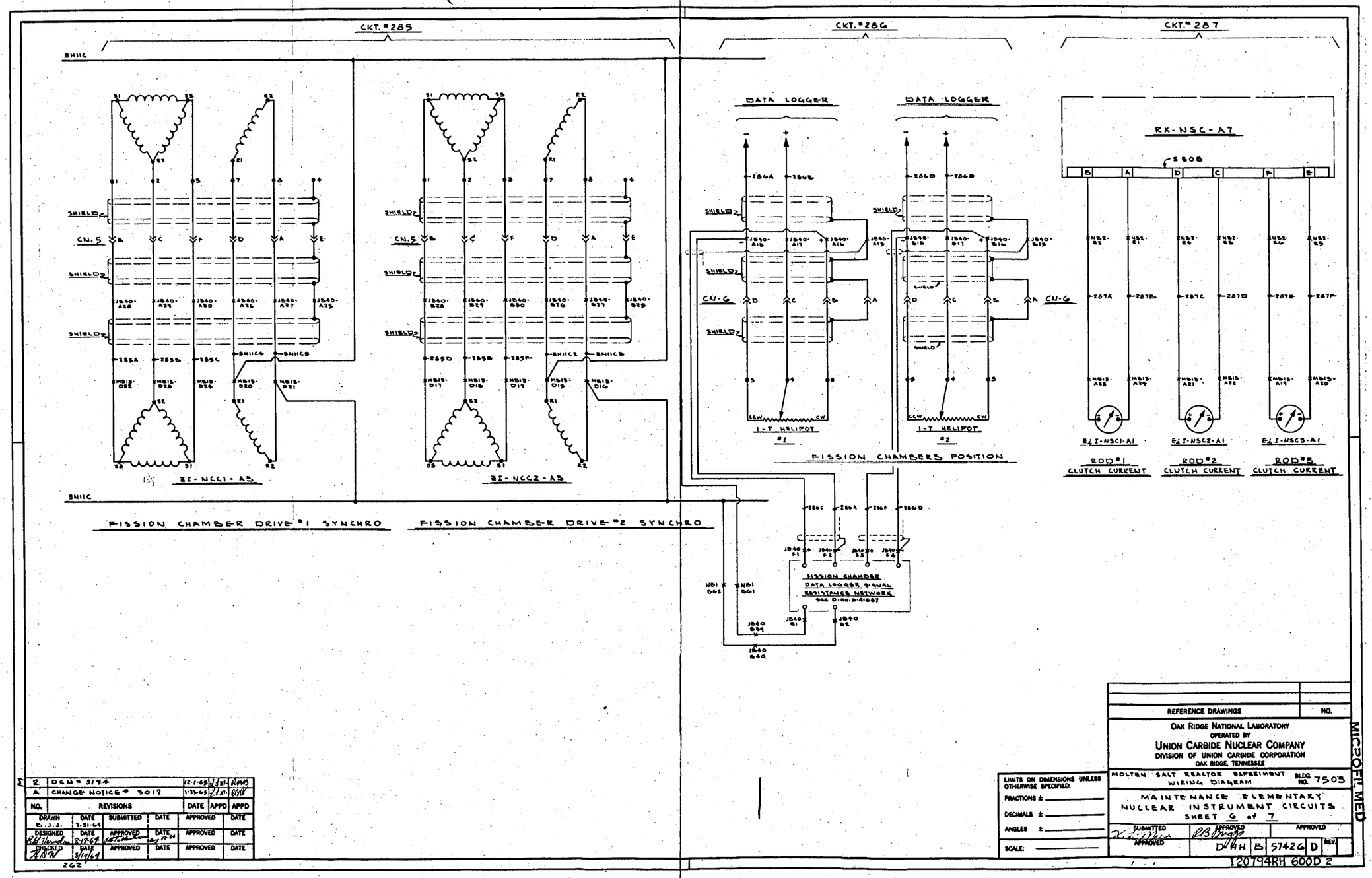


Fig. 4.1.27. Maintenance elementary, nuclear instrument circuits, sheet 6 of 7.

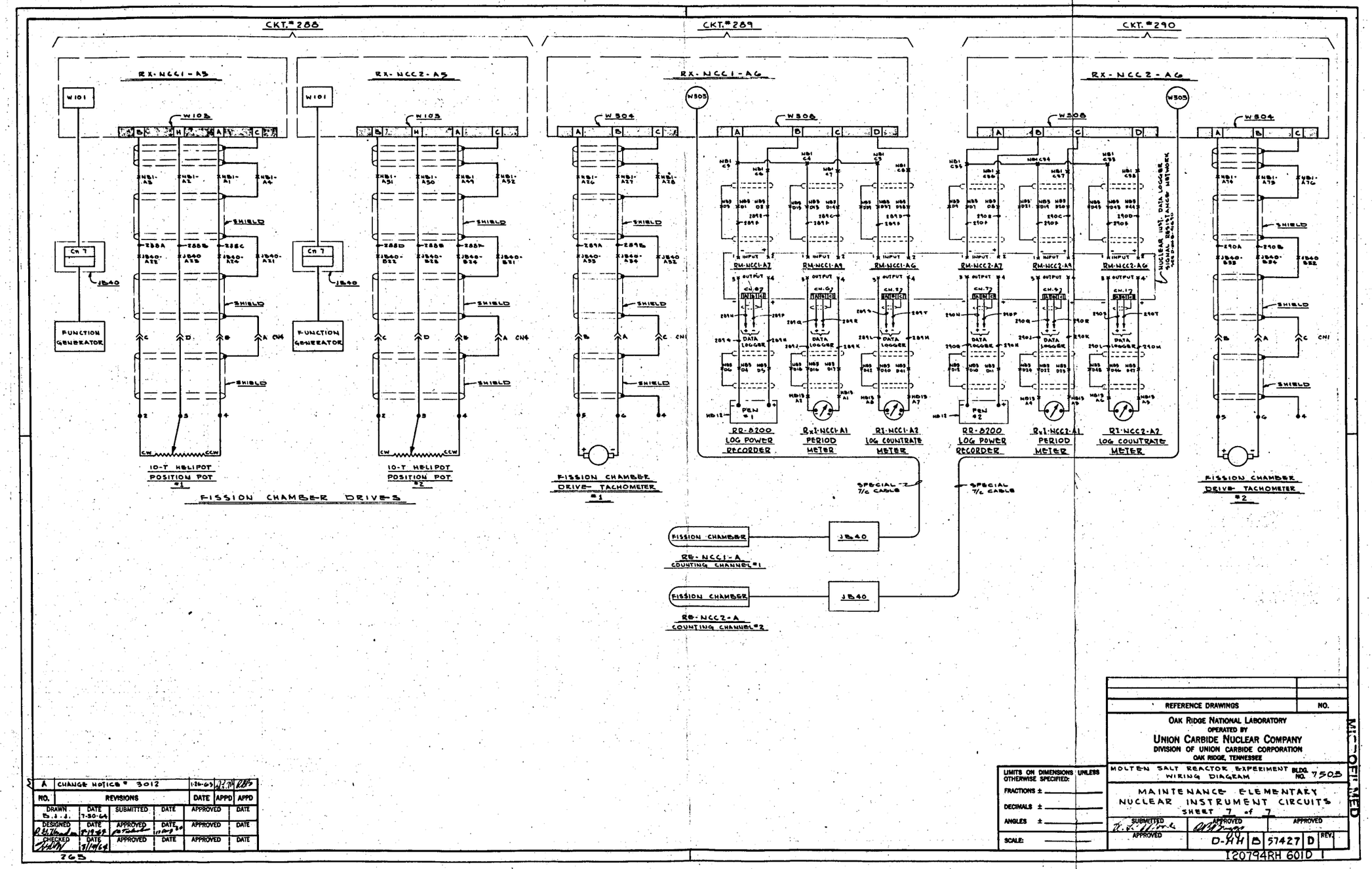


Fig. 4.1.28. Maintenance elementary, nuclear instrument circuits, sheet 7 of 7.

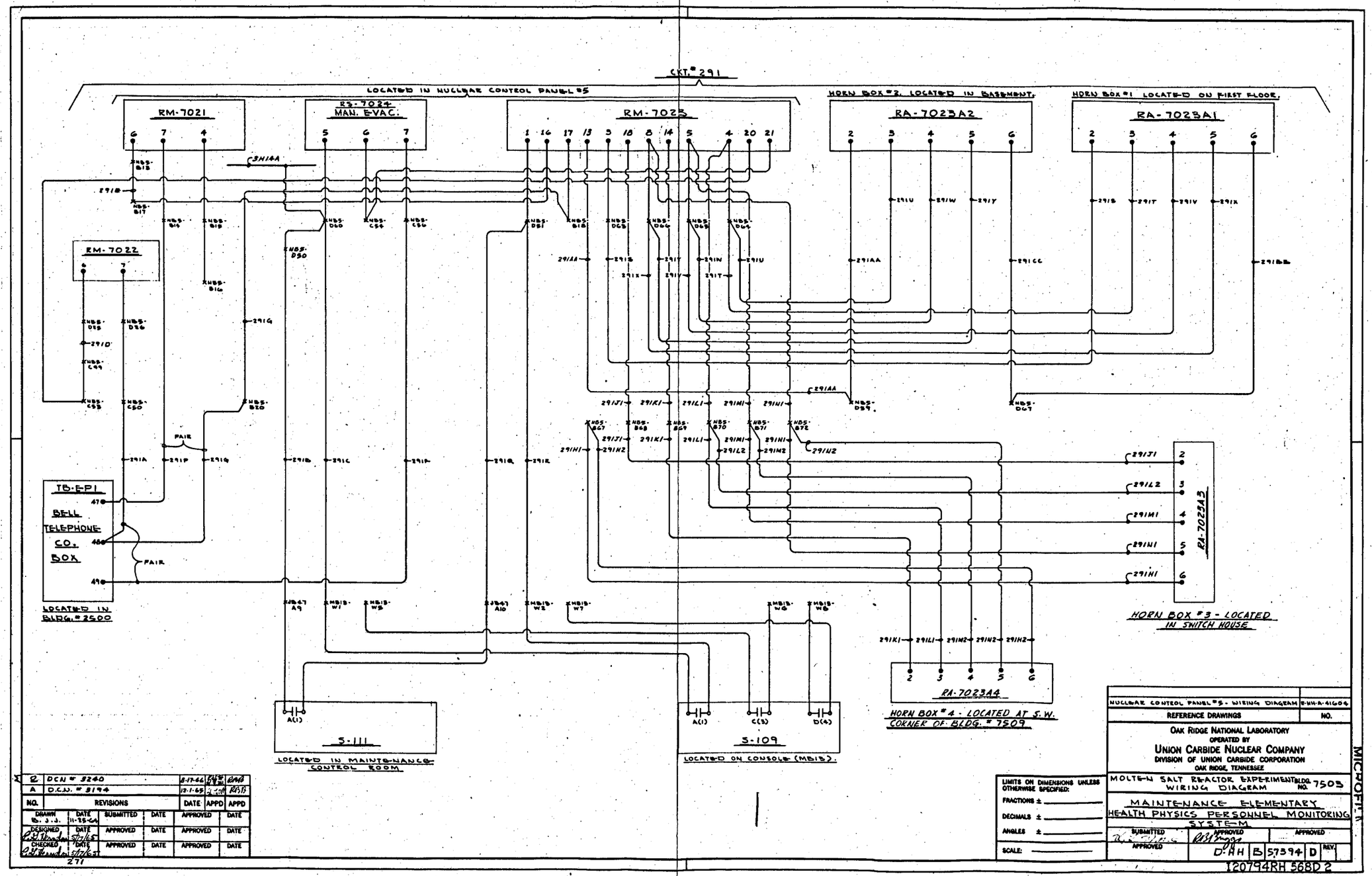


Fig. 4.1.29. Maintenance elementary, health physics personnel monitoring system.

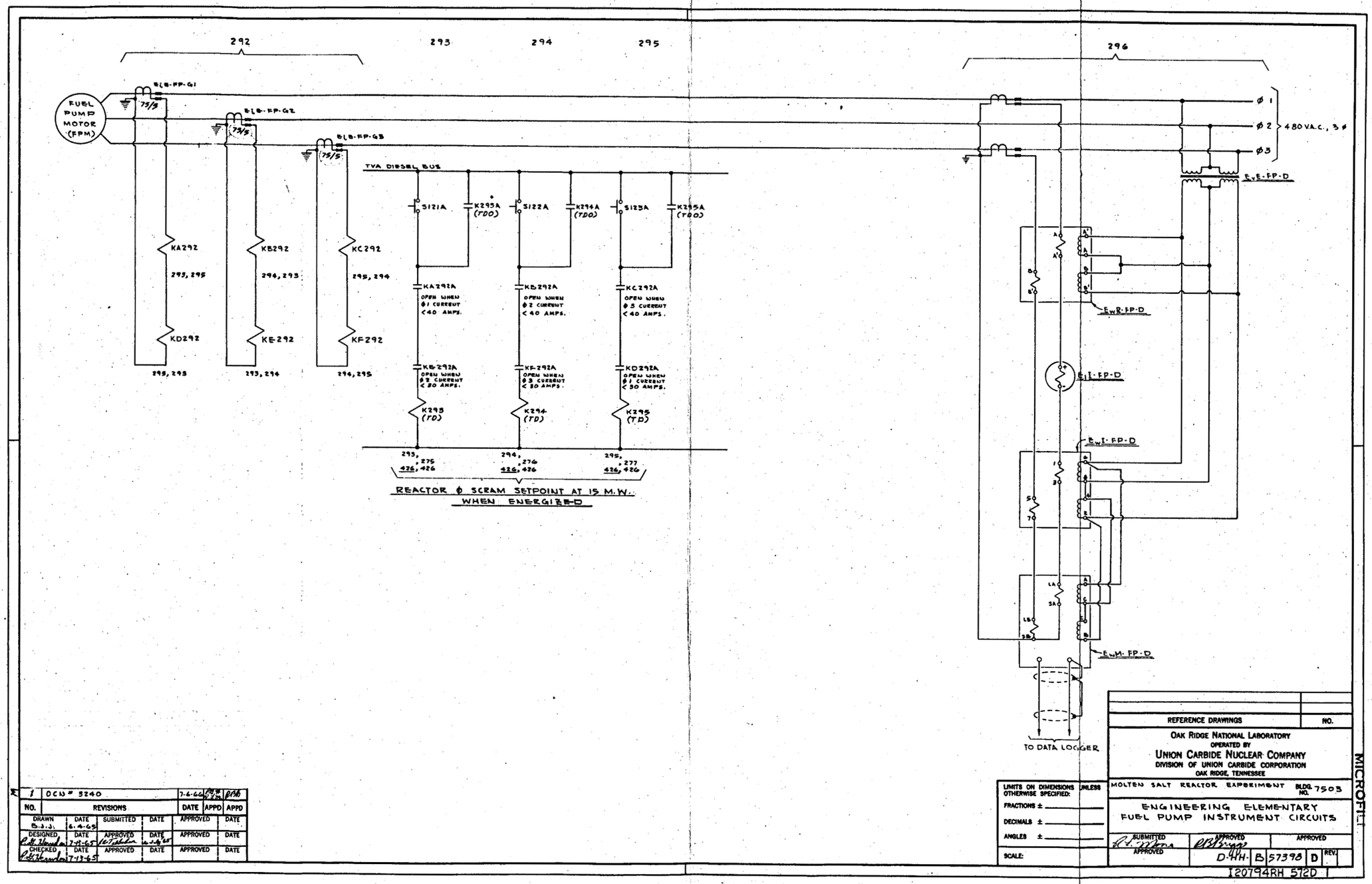


Fig. 4.1.30. Engineering elementary, fuel pump instrument circuits.

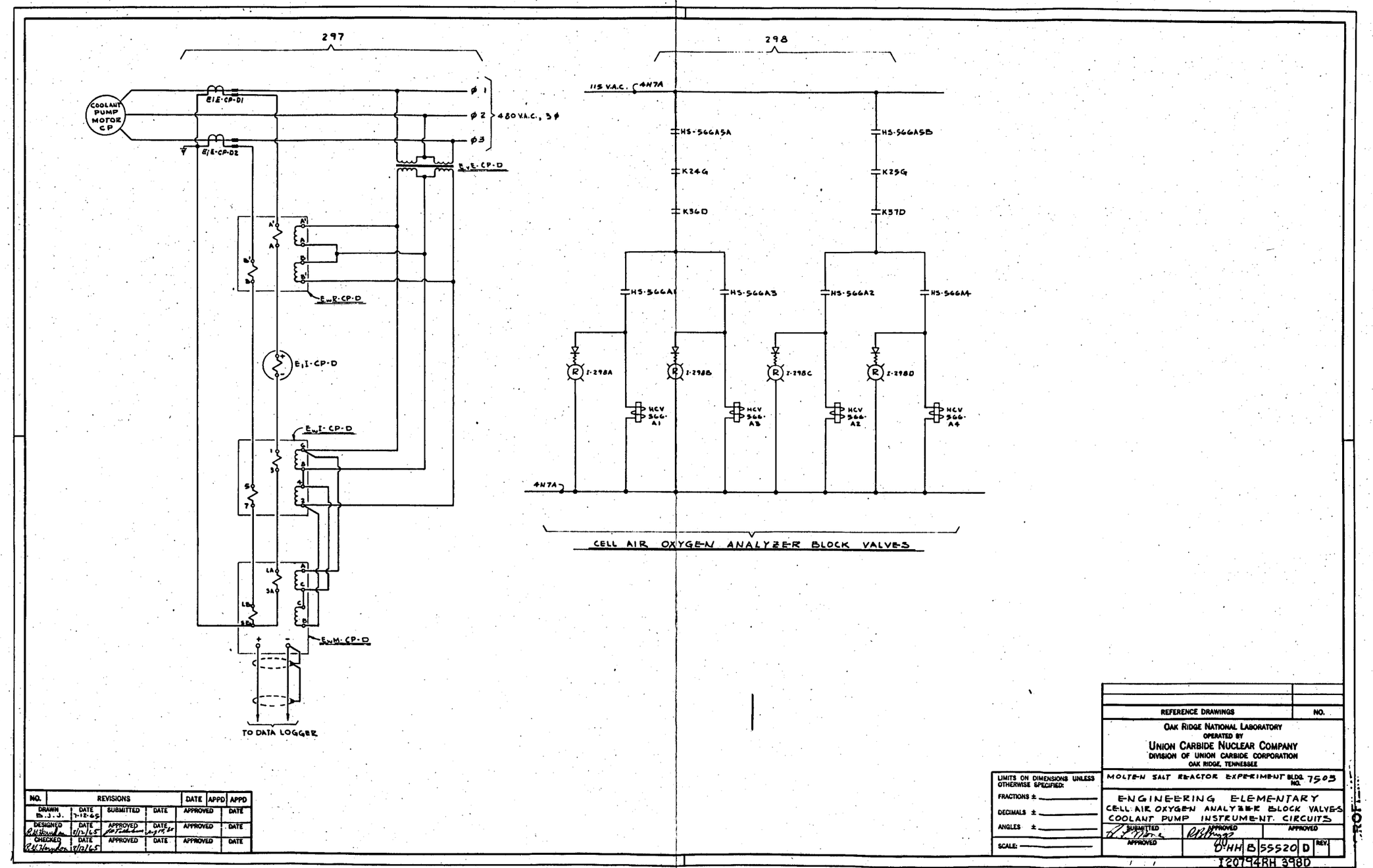


Fig. 4.1.31. Engineering elementary, cell air oxygen analyzer block valves, coolant pump instrument circuits.

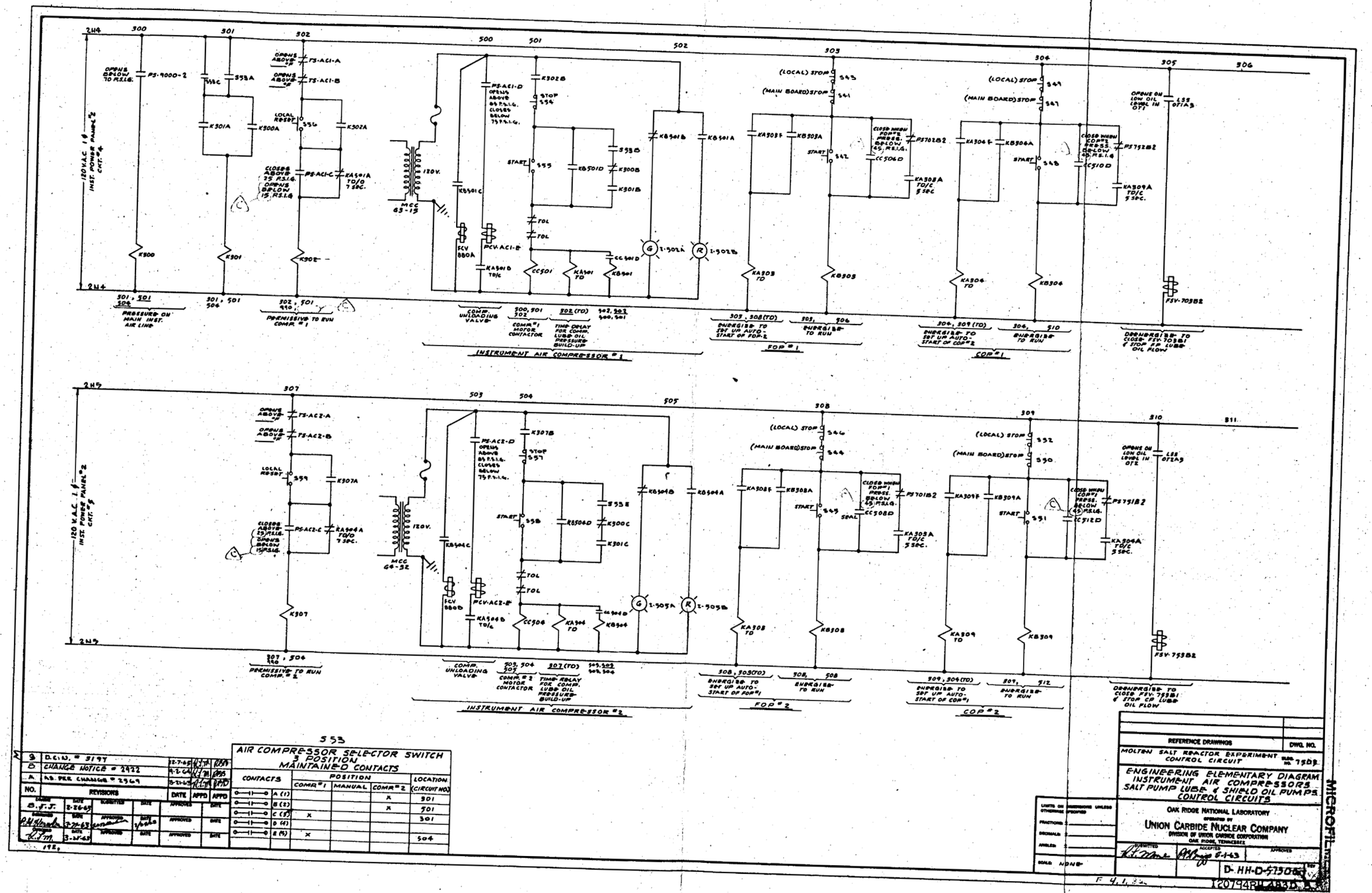


Fig. 4.1.32. Engineering elementary diagram, instrument air compressors, salt pump lube and shield oil pumps, control circuits.

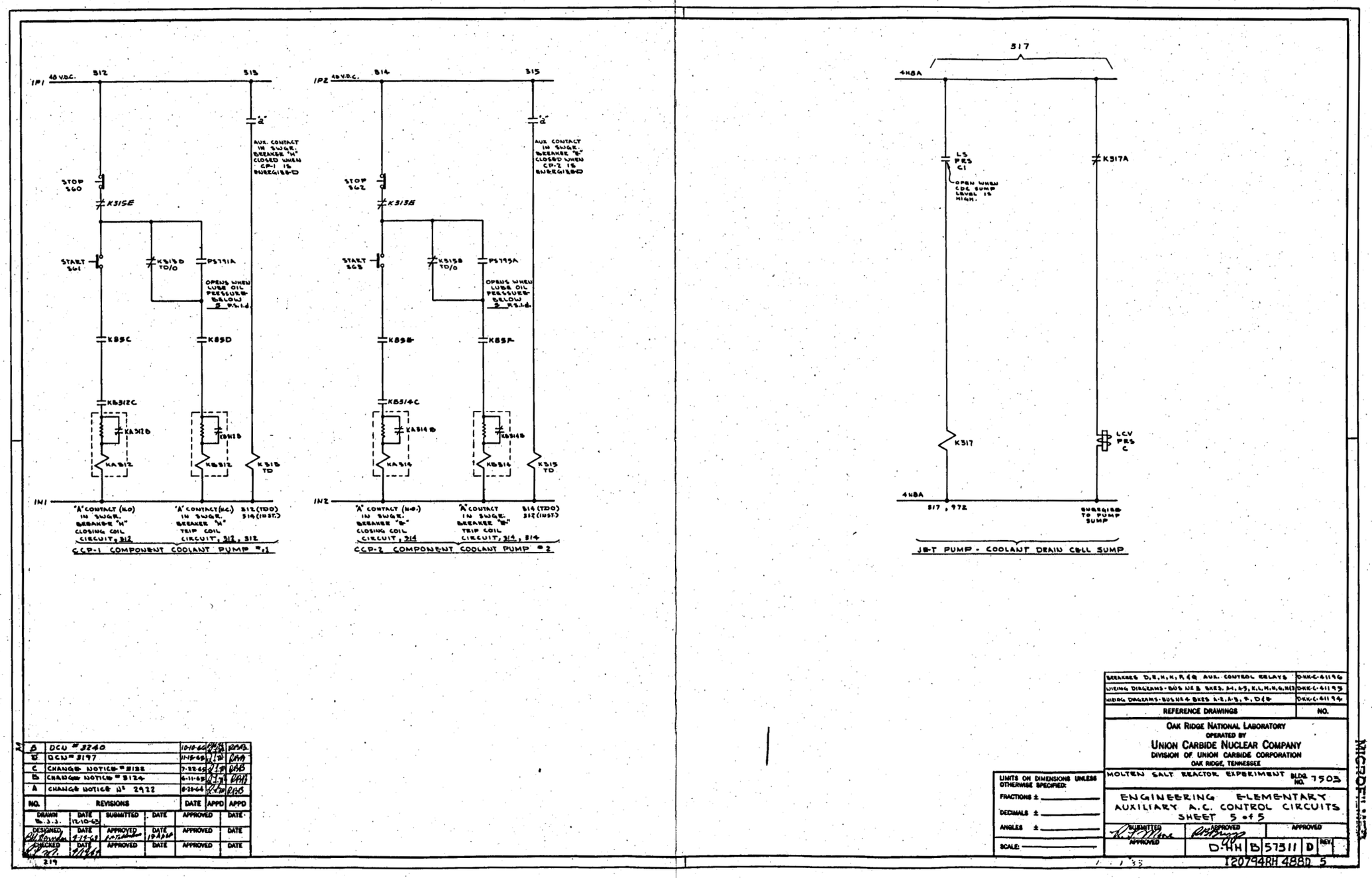


Fig. 4.1.33. Engineering elementary, auxiliary ac control circuits, sheet 5 of 5.

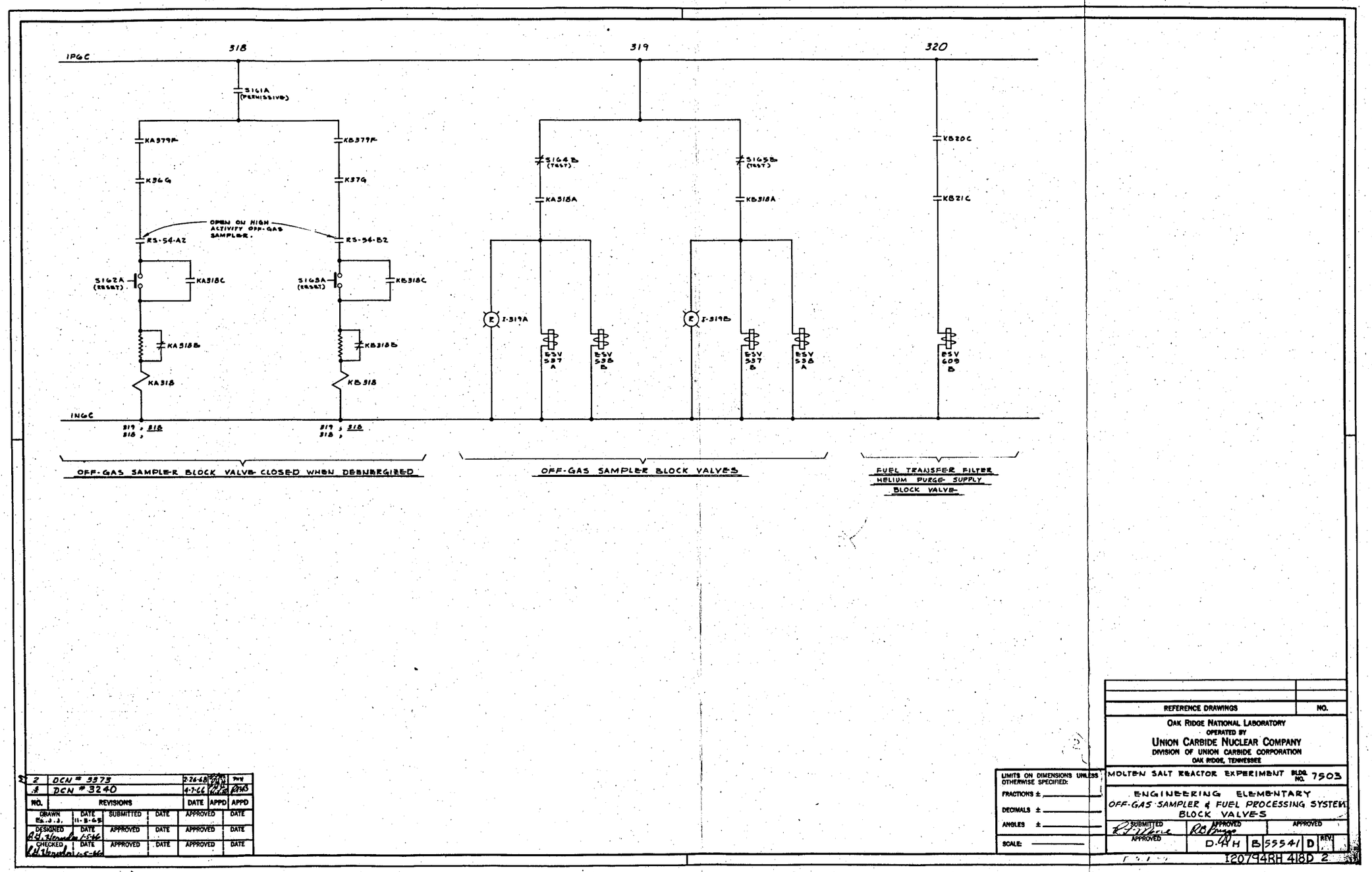


Fig. 4.1.34. Engineering elementary, off-gas sampler block valves.

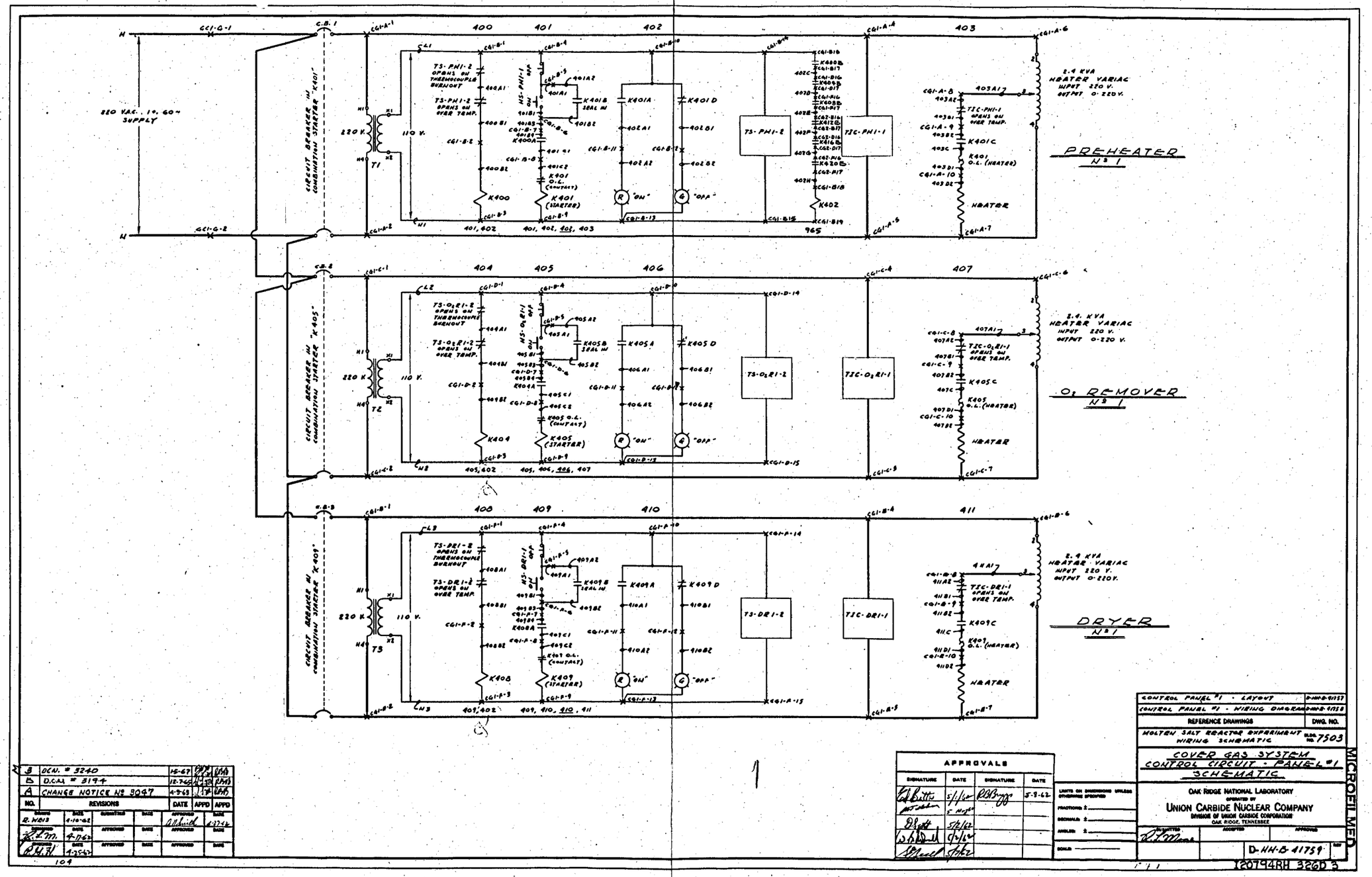


Fig. 4.1.35. Cover gas system, control circuit–panel 1, schematic.

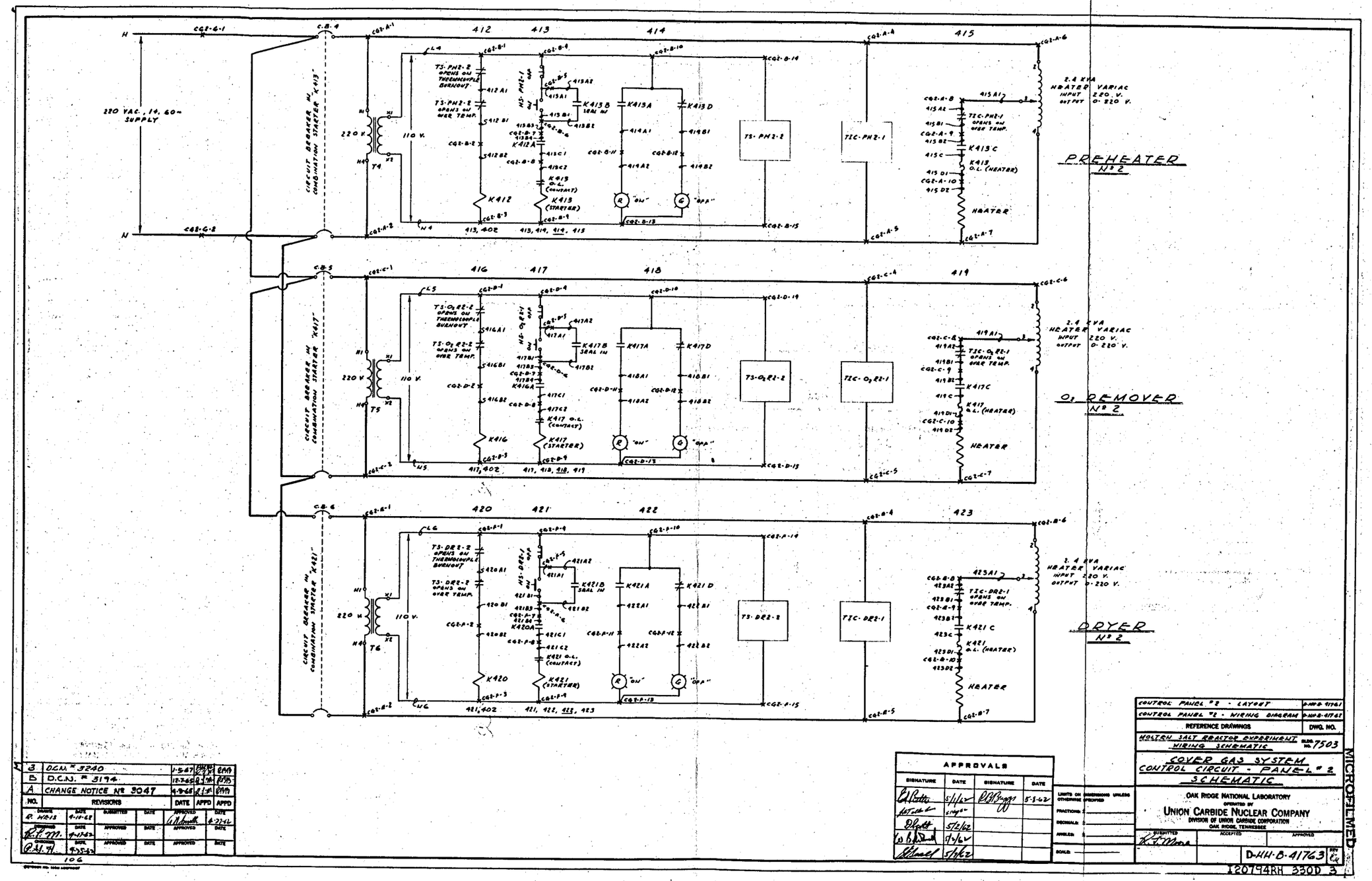


Fig. 4.1.36. Cover gas system, control circuit–panel 2, schematic.

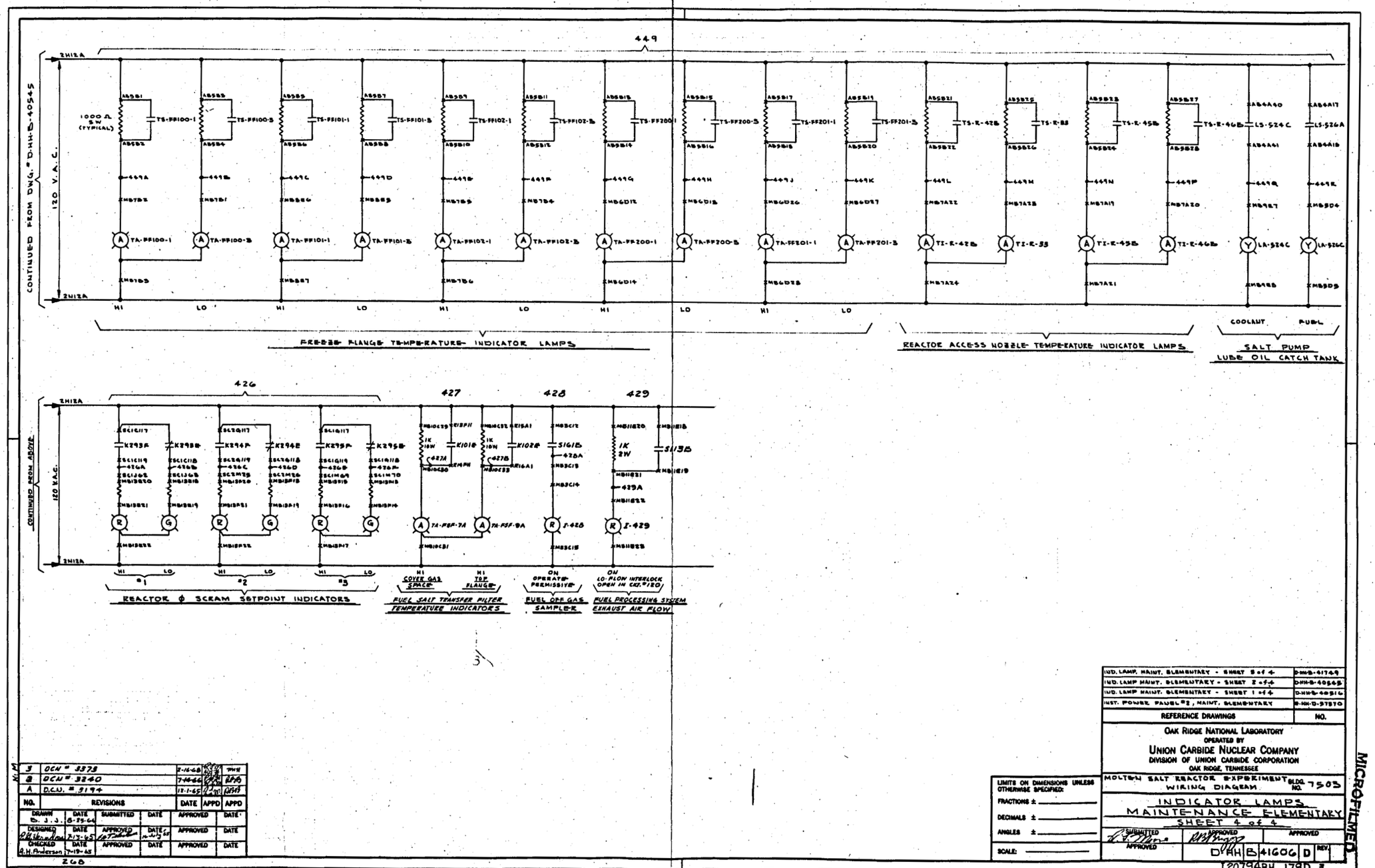


| NO. | REVISIONS | DATE | APPD | APPD |
|---|---|---|---|---|
| 3 | OCN # 3378 | 2-16-66 | | |
| 2 | OCN # 3240 | 7-14-66 | | |
| A | D.C.N. # 3194 | 12-1-65 | | |

| DRAWN | DATE | SUBMITTED | DATE | APPROVED | DATE |
|---|---|---|---|---|---|
| D. J. J. | 8-25-64 | | | | |
| DESIGNED | DATE | APPROVED | DATE | APPROVED | DATE |
| | 7-13-65 | | | | |
| CHECKED | DATE | APPROVED | DATE | APPROVED | DATE |
| G.H. Anderson | 7-19-65 | | | | |

LIMITS ON DIMENSIONS UNLESS OTHERWISE SPECIFIED:
FRACTIONS ±
DECIMALS ±
ANGLES ±
SCALE:

| REFERENCE DRAWINGS | NO. |
|---|---|
| IND. LAMP. MAINT. ELEMENTARY - SHEET 3 of 4 | D-HB-41749 |
| IND. LAMP MAINT. ELEMENTARY - SHEET 2 of 4 | D-HB-40545 |
| IND. LAMP MAINT. ELEMENTARY - SHEET 1 of 4 | D-HB-40516 |
| INST. POWER PANEL #2, MAINT. ELEMENTARY | D-HH-D-27870 |

OAK RIDGE NATIONAL LABORATORY
OPERATED BY
UNION CARBIDE NUCLEAR COMPANY
DIVISION OF UNION CARBIDE CORPORATION
OAK RIDGE, TENNESSEE

MOLTEN SALT REACTOR EXPERIMENT WIRING DIAGRAM BLDG. NO. 7503

INDICATOR LAMPS
MAINTENANCE ELEMENTARY
SHEET 4 of 4

SUBMITTED
APPROVED
APPROVED
APPROVED

D-RH-B-41606 D REV.

120794RH 179D 3

MICROFILMED

Fig. 4.1.37. Indicator lamps, maintenance elementary, sheet 4 of 4.

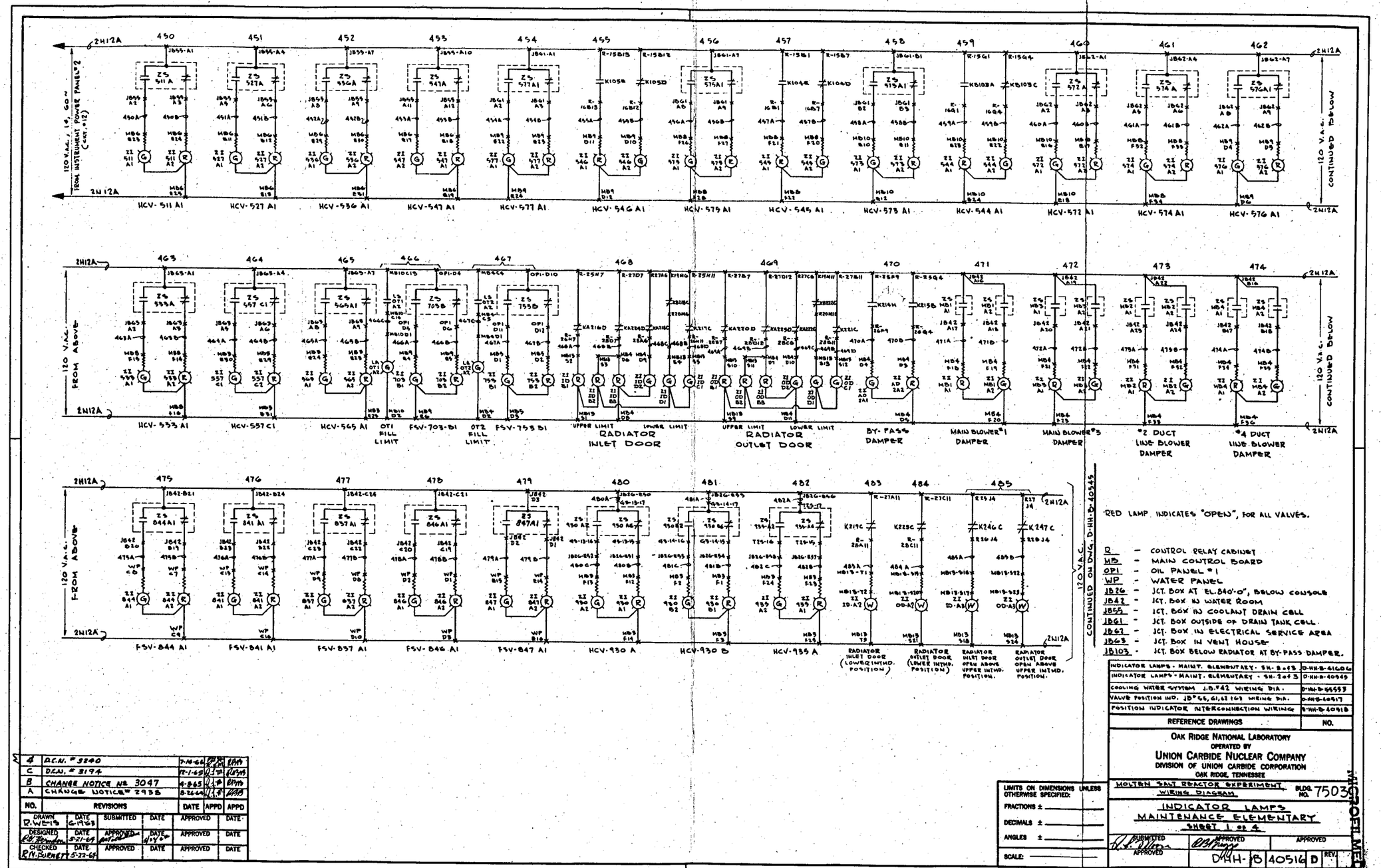


Fig. 4.1.38. Indicator lamps, maintenance elementary, sheet 1 of 4.

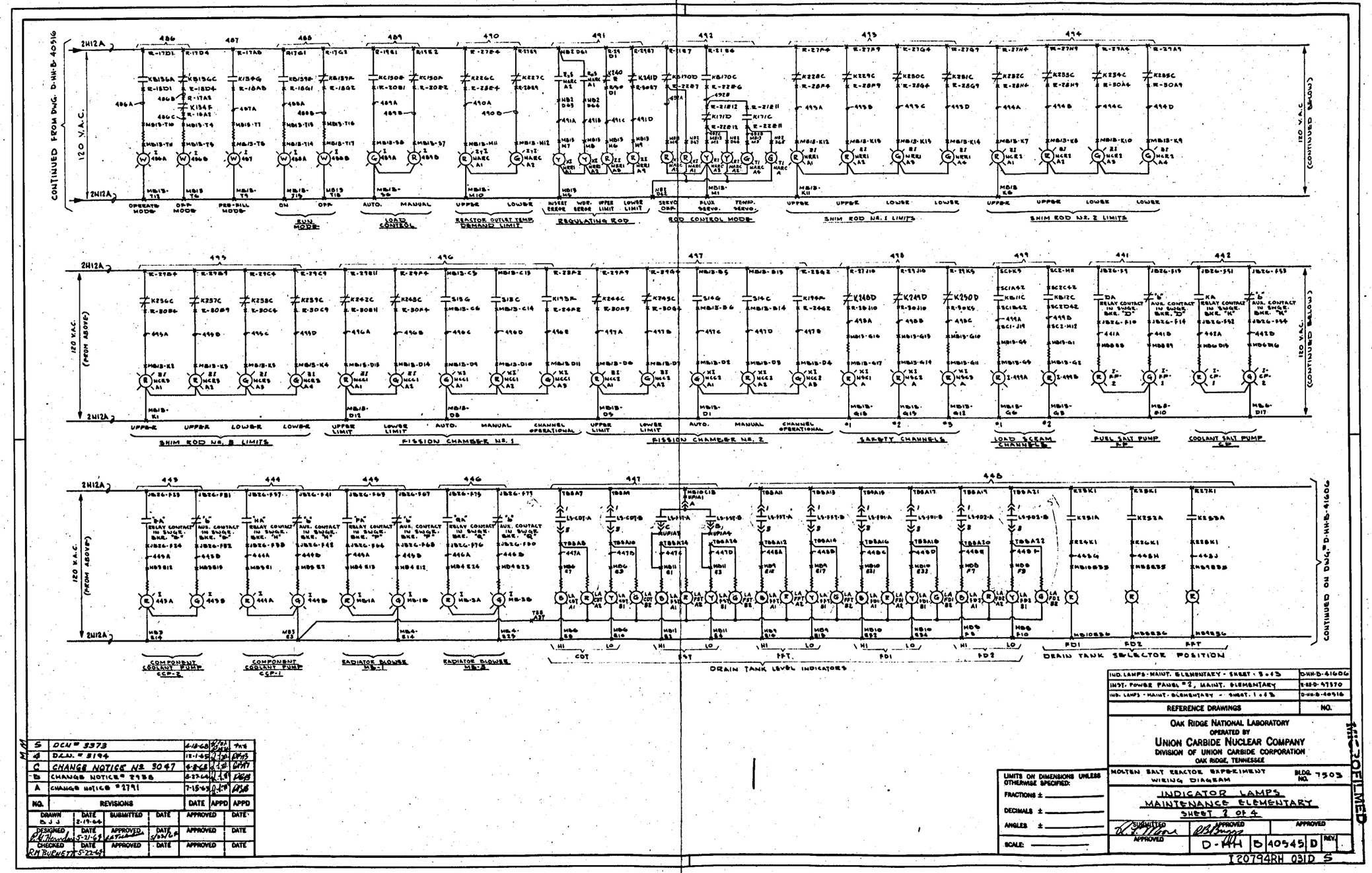


Fig. 4.1.39. Indicator lamps, maintenance elementary, sheet 2 of 4.

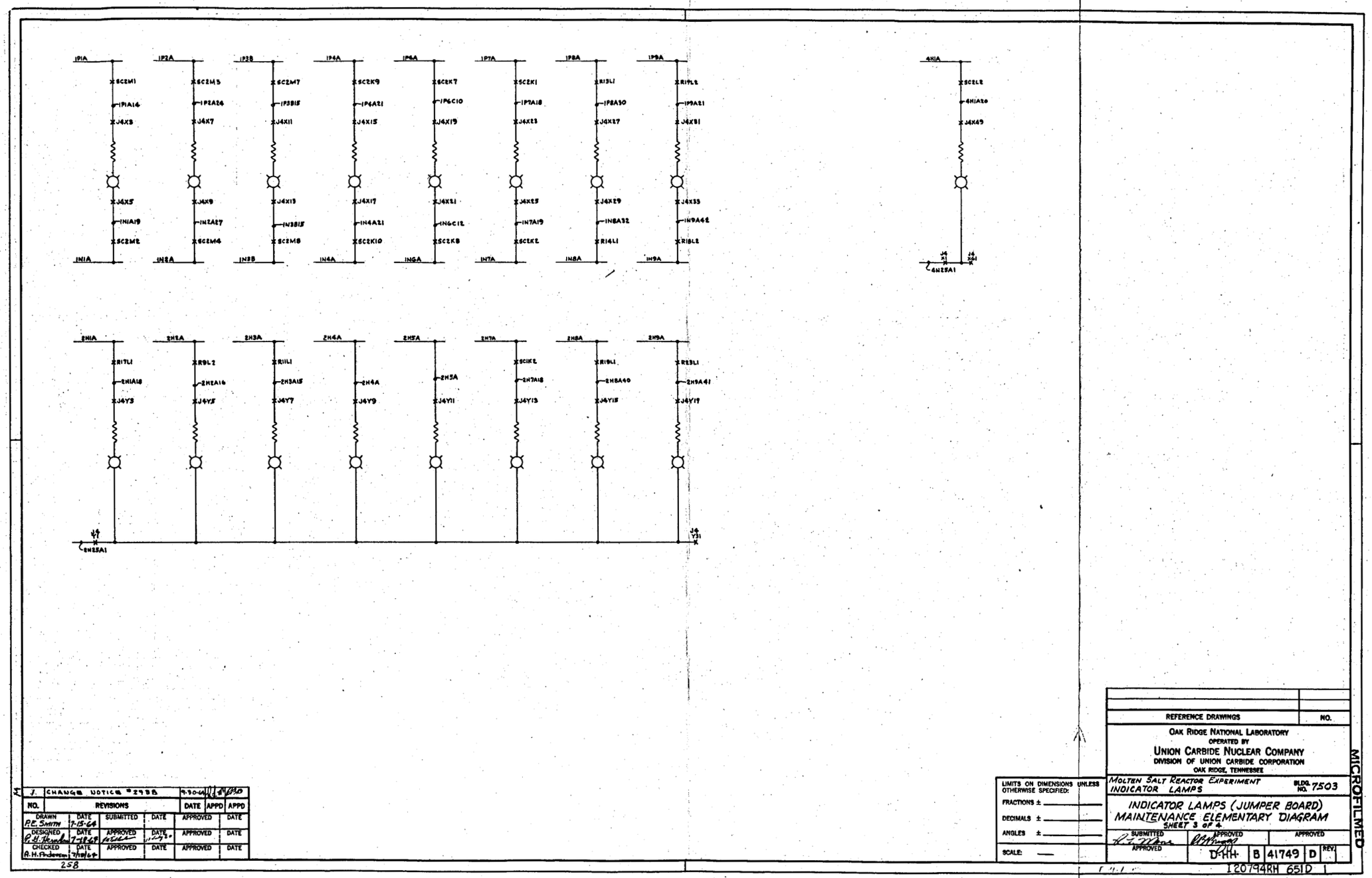


Fig. 4.1.40. Indicator lamps (jumper board), maintenance elementary diagram, sheet 3 of 4.

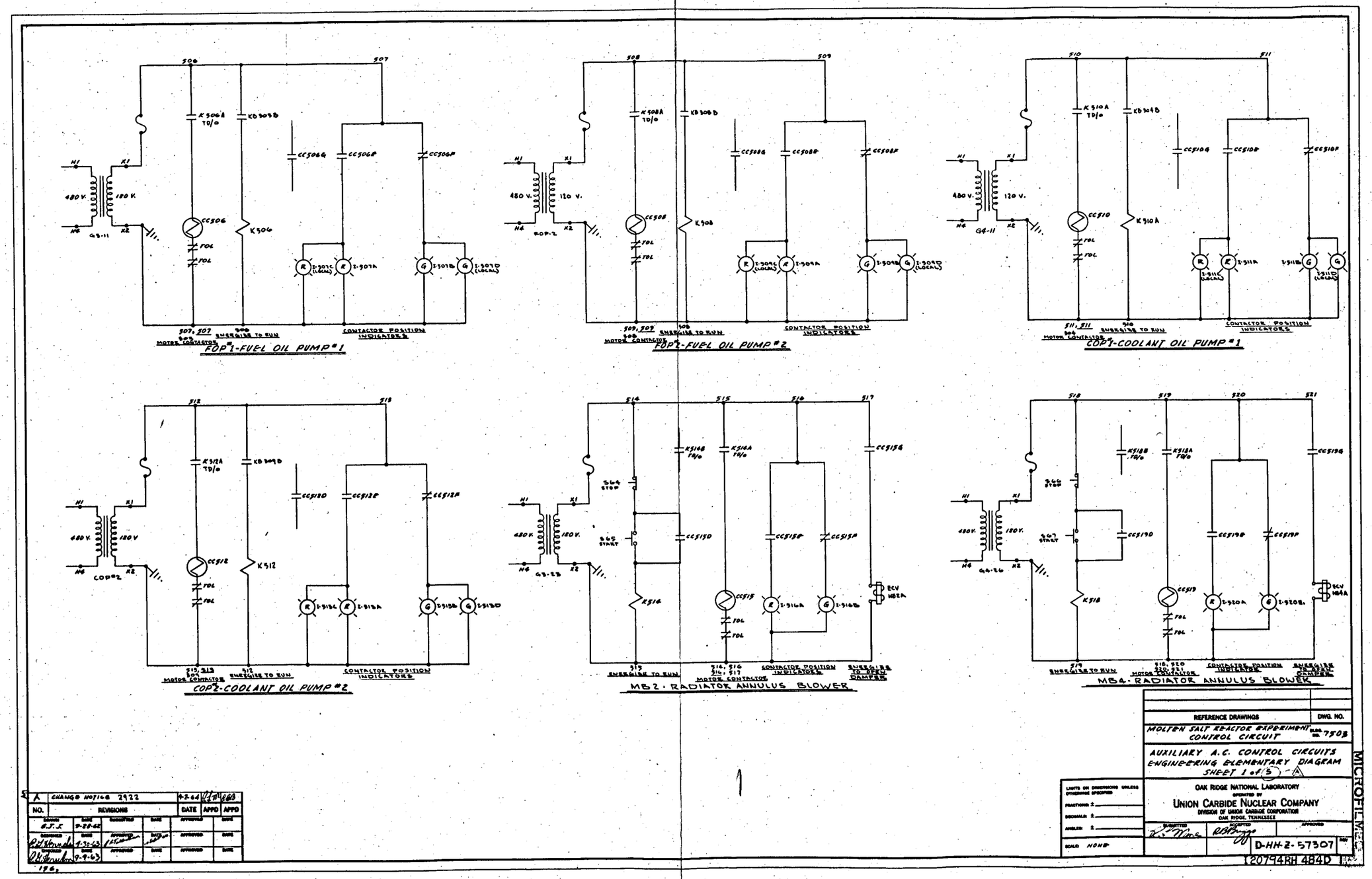


Fig. 4.1.41. Auxiliary ac control circuits, engineering elementary diagram, sheet 1 of 5.

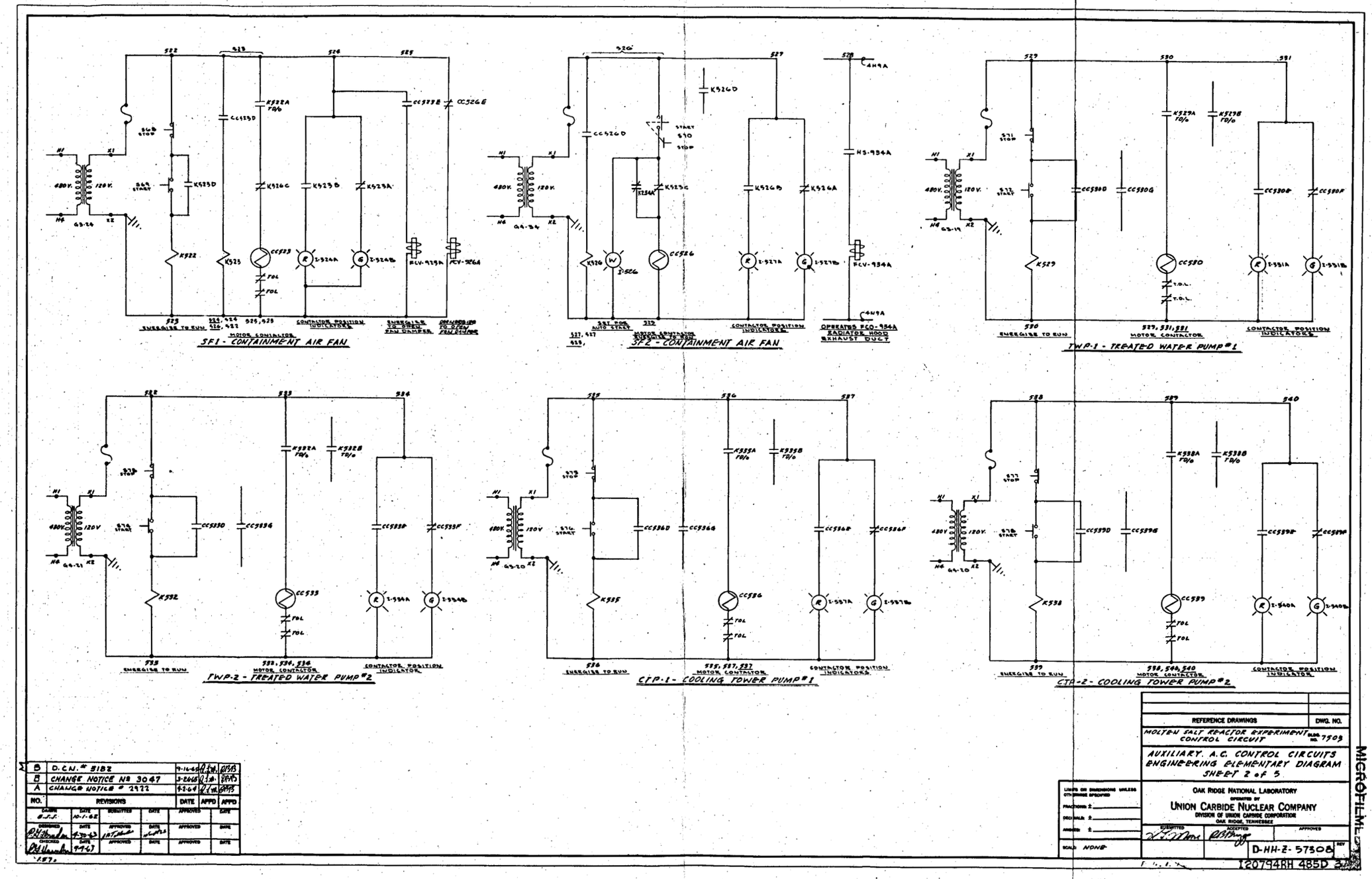


Fig. 4.1.42. Auxiliary ac control circuits, engineering elementary diagram, sheet 2 of 5.

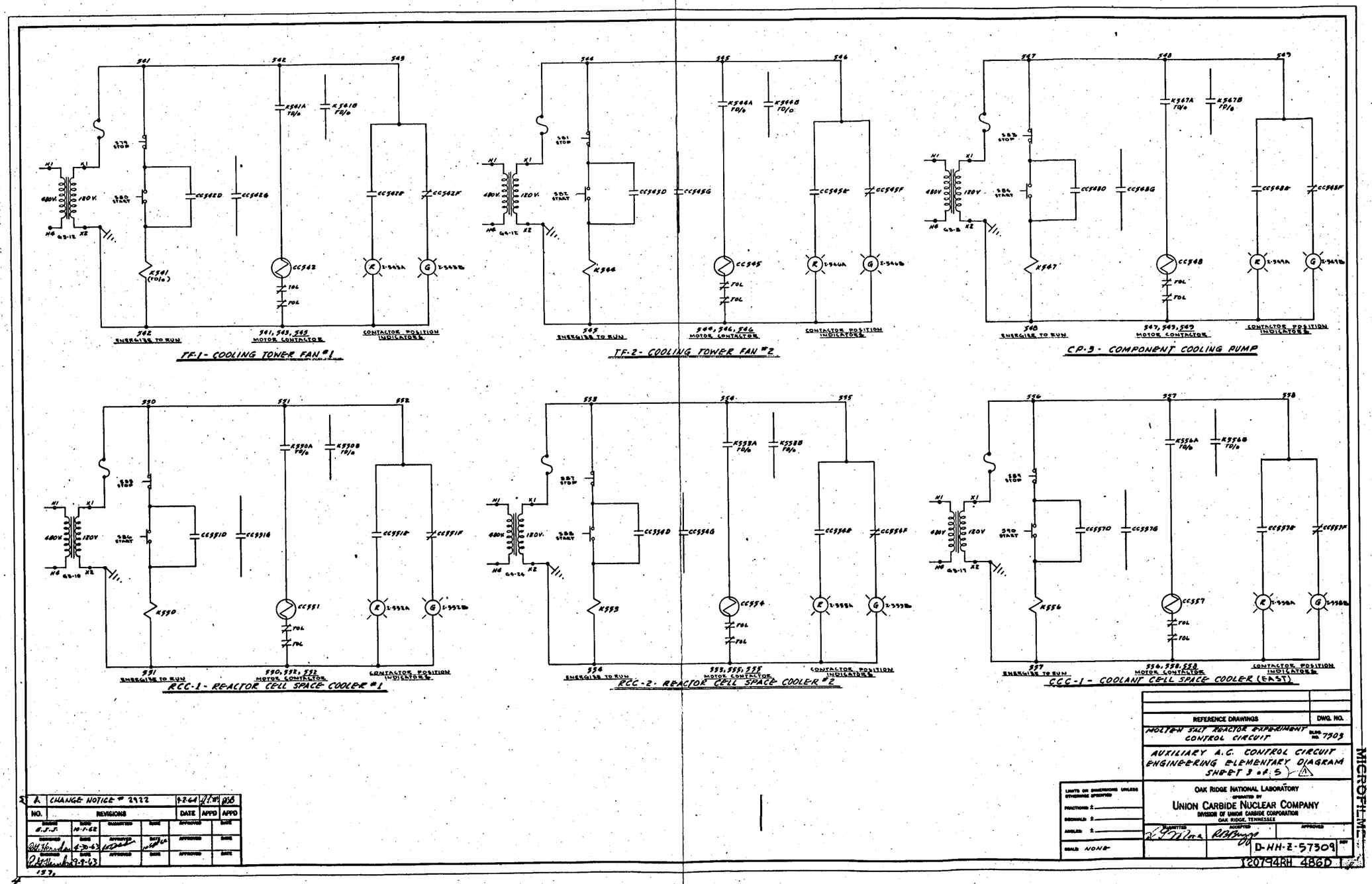


Fig. 4.1.43. Auxiliary ac control circuit, engineering elementary diagram, sheet 3 of 5.

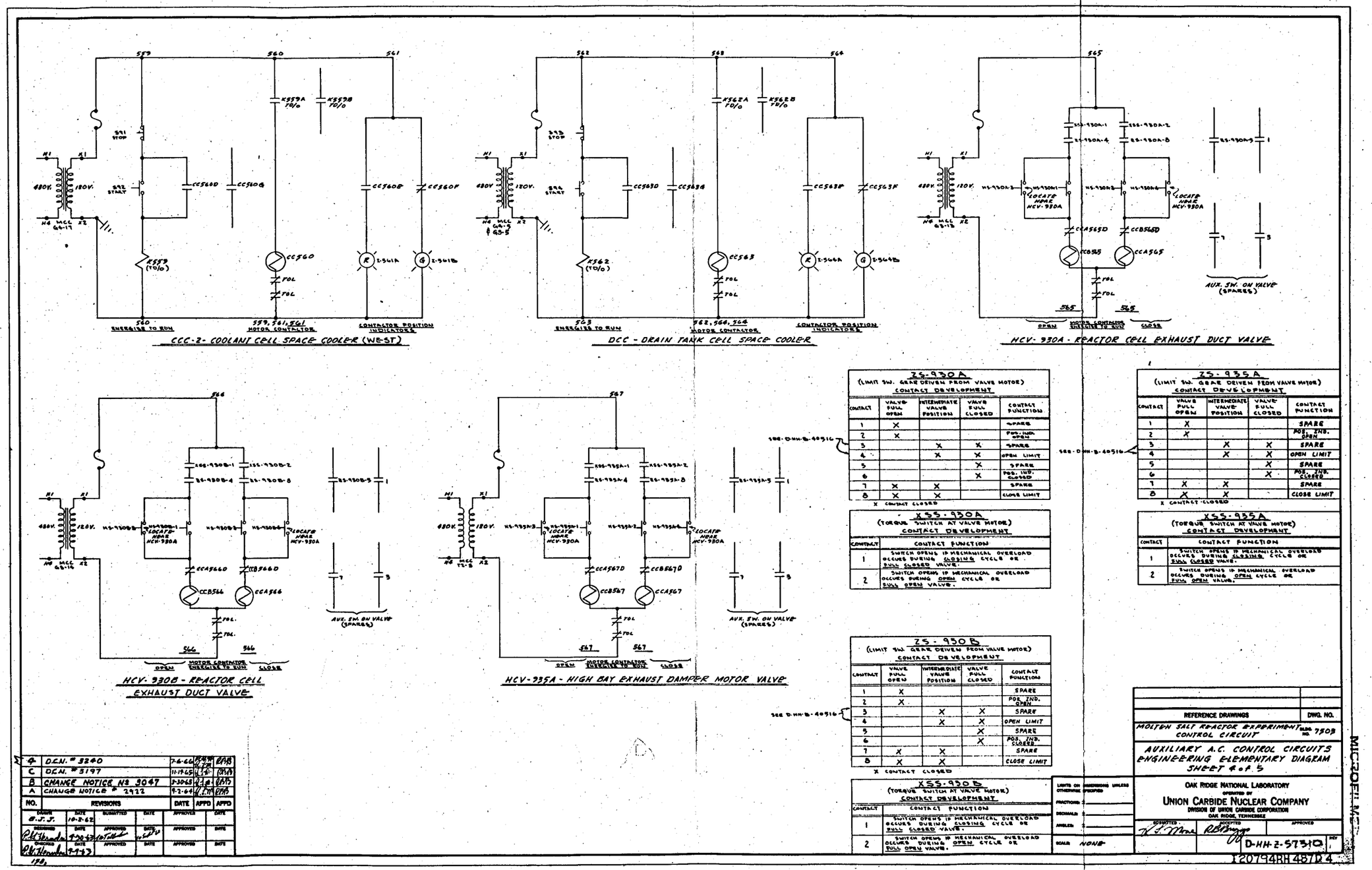


Fig. 4.1.44. Auxiliary ac control circuits, engineering elementary diagram, sheet 4 of 5.

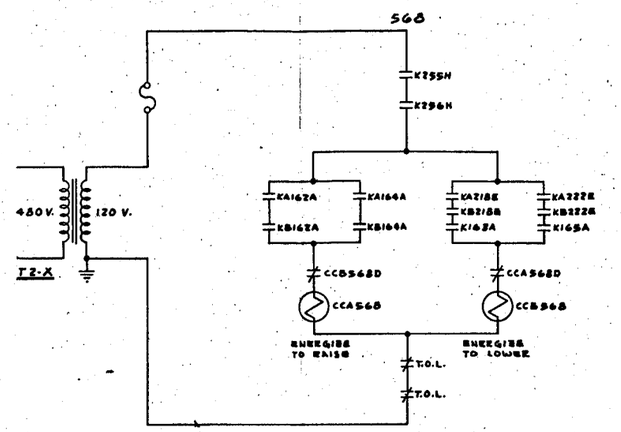


RADIATOR DOOR DRIVE MOTOR CONTACTOR

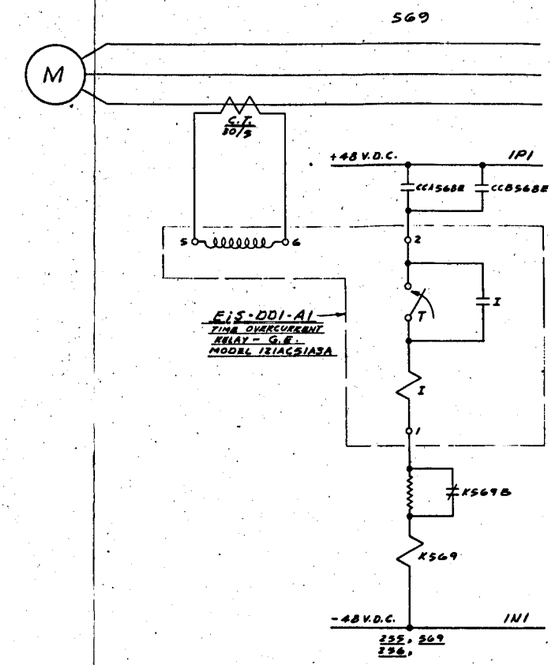


RADIATOR DOOR DRIVE MOTOR OVERCURRENT PROTECTION

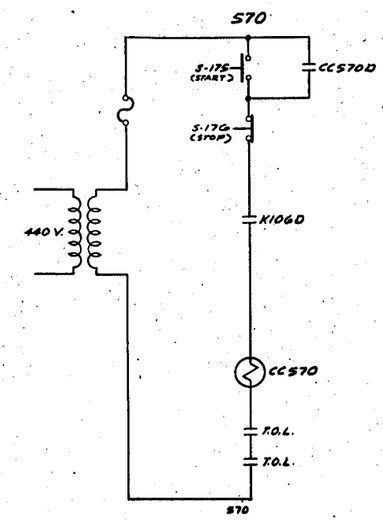


TWP-3 - TREATED WATER PUMP #3

| NO. | REVISIONS | DATE | APPD | APPD |
|---|---|---|---|---|
| 1 | DCN # 3370 | 5-6-67 | [illegible] | [illegible] |

| | | | | | |
|---|---|---|---|---|---|
| DRAWN S. J. J. | DATE 7-6-66 | SUBMITTED | DATE | APPROVED | DATE |
| DESIGNED [illegible] | DATE 1-20-67 | APPROVED | DATE | APPROVED | DATE |
| CHECKED [illegible] | DATE 1-20-67 | APPROVED | DATE | APPROVED | DATE |

LIMITS ON DIMENSIONS UNLESS OTHERWISE SPECIFIED:
FRACTIONS ±
DECIMALS ±
ANGLES ±
SCALE:

REFERENCE DRAWINGS | NO.

OAK RIDGE NATIONAL LABORATORY
OPERATED BY
UNION CARBIDE NUCLEAR COMPANY
DIVISION OF UNION CARBIDE CORPORATION
OAK RIDGE, TENNESSEE

MOLTEN SALT REACTOR EXPERIMENT BLDG. NO. 7503

ENGINEERING ELEMENTARY
RADIATOR DOOR DRIVE -MOTOR

SUBMITTED [illegible] APPROVED | APPROVED [illegible] | APPROVED

D-HH B 48955 D REV. 1

120794RH 653D 1

MICROFILMED

Fig. 4.1.45. Engineering elementary, radiator door drive motor.

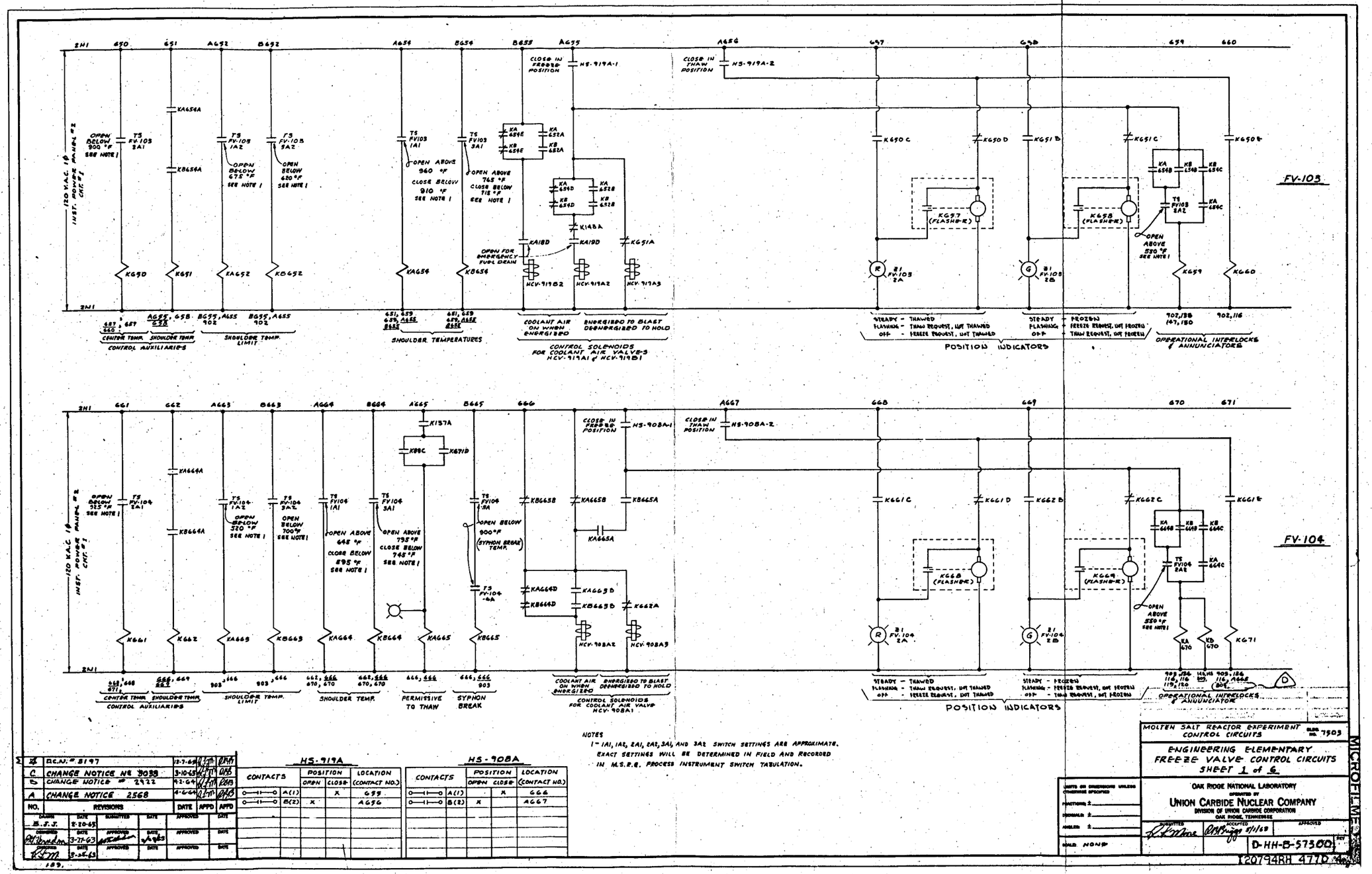


Fig. 4.1.46. Engineering elementary, freeze valve control circuits, sheet 1 of 6.

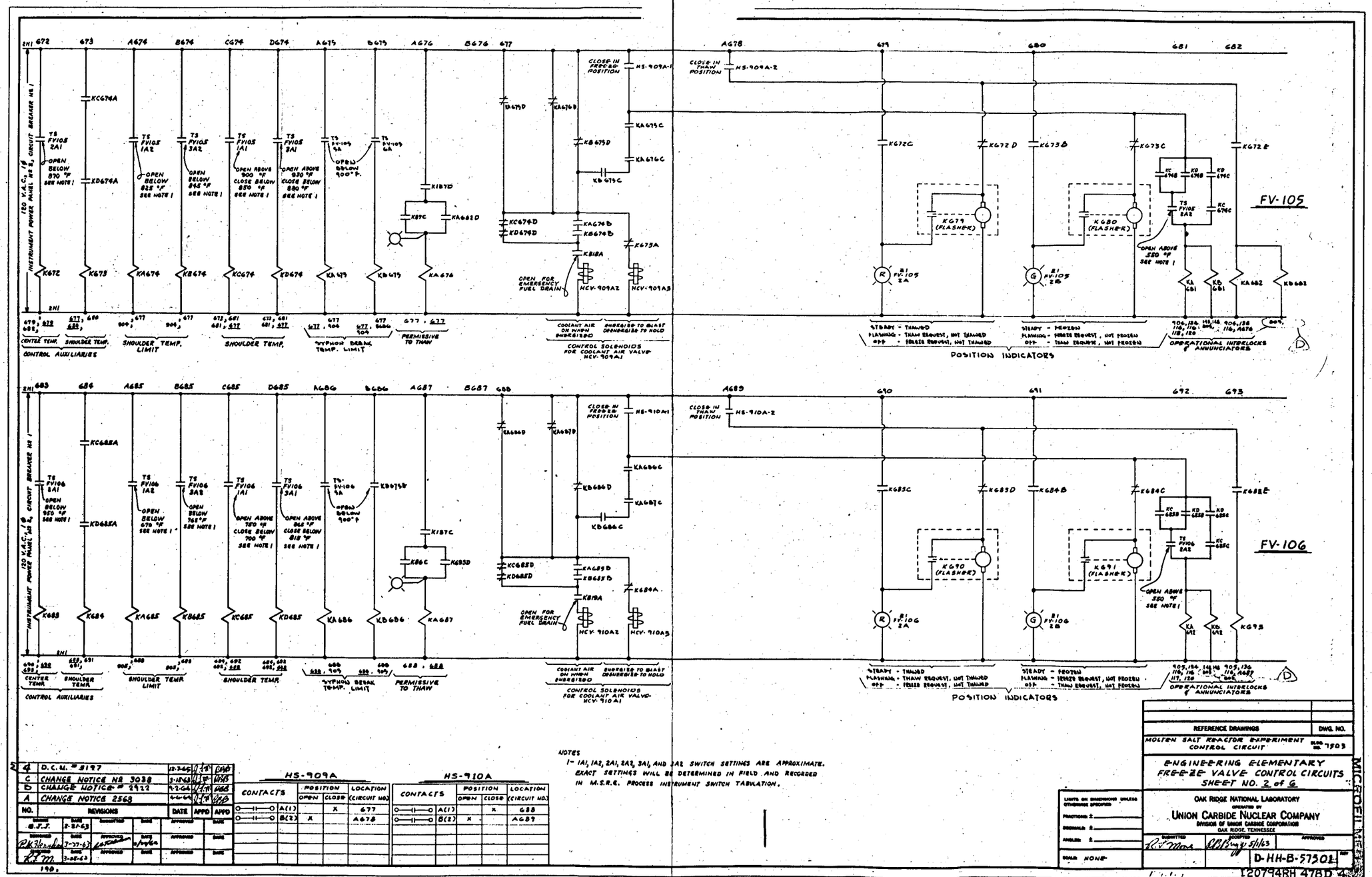


Fig. 4.1.47. Engineering elementary, freeze valve control circuits, sheet 2 of 6.

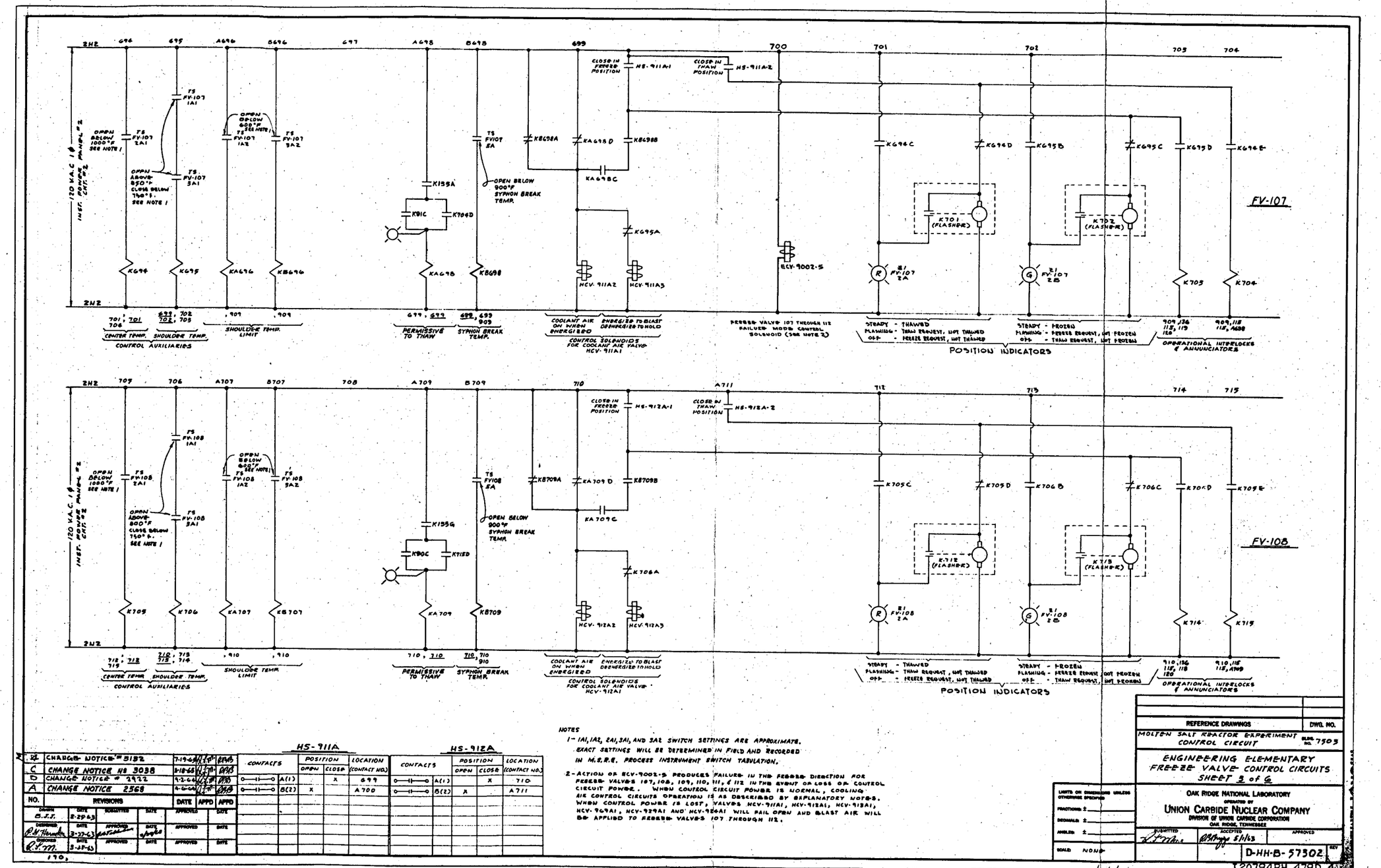


Fig. 4.1.48. Engineering elementary, freeze valve control circuits, sheet 3 of 6.

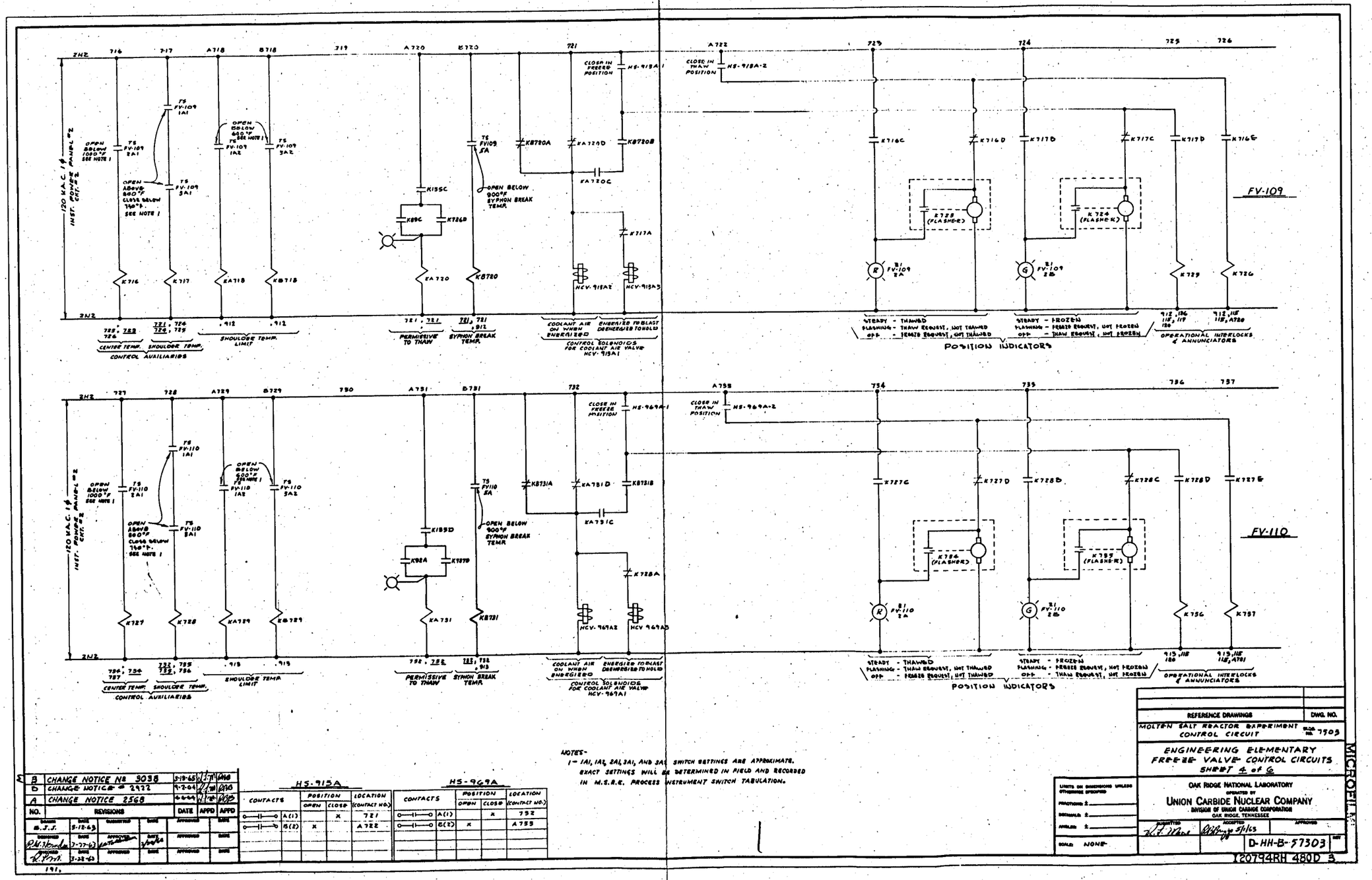


NOTES-
1 - 1A1, 1A2, 2A1, 2A1, AND 3A1 SWITCH SETTINGS ARE APPROXIMATE. EXACT SETTINGS WILL BE DETERMINED IN FIELD AND RECORDED IN M.S.R.E. PROCESS INSTRUMENT SWITCH TABULATION.

Fig. 4.1.49. Engineering elementary, freeze valve control circuits, sheet 4 of 6.

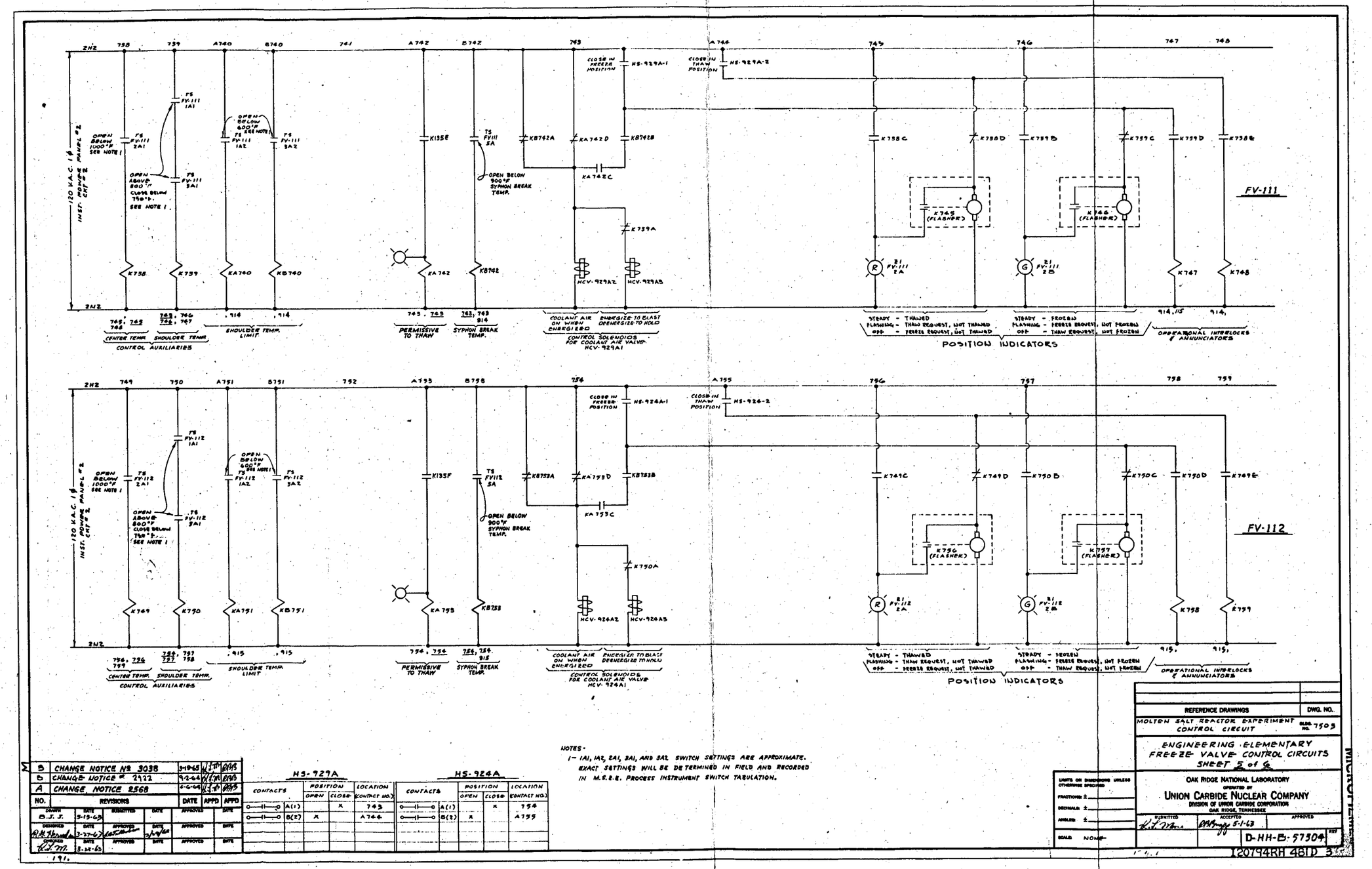


Fig. 4.1. 50. Engineering elementary, freeze valve control circuits, sheet 5 of 6.

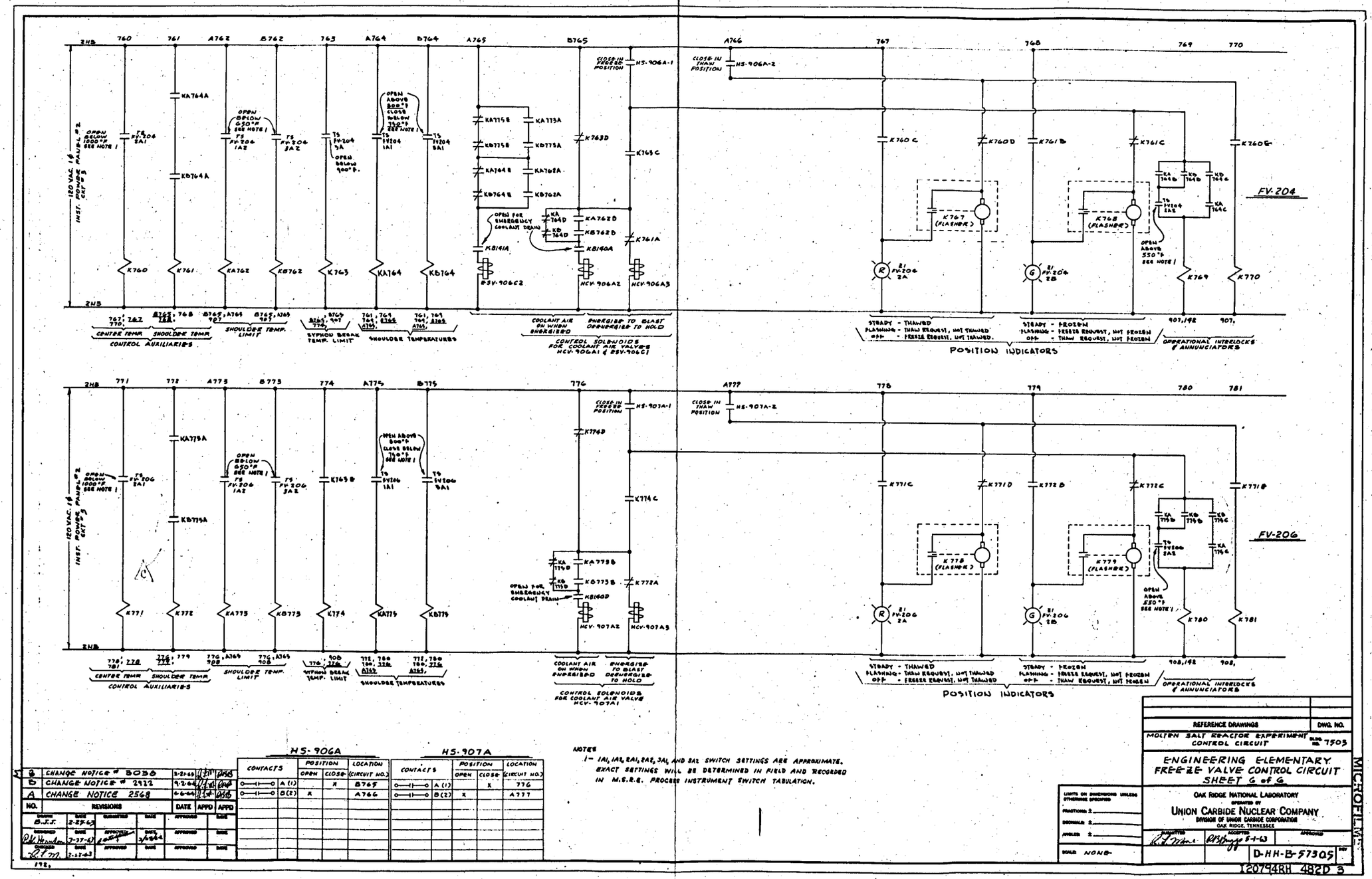


Fig. 4.1.51. Engineering elementary, freeze valve control circuits, sheet 6 of 6.

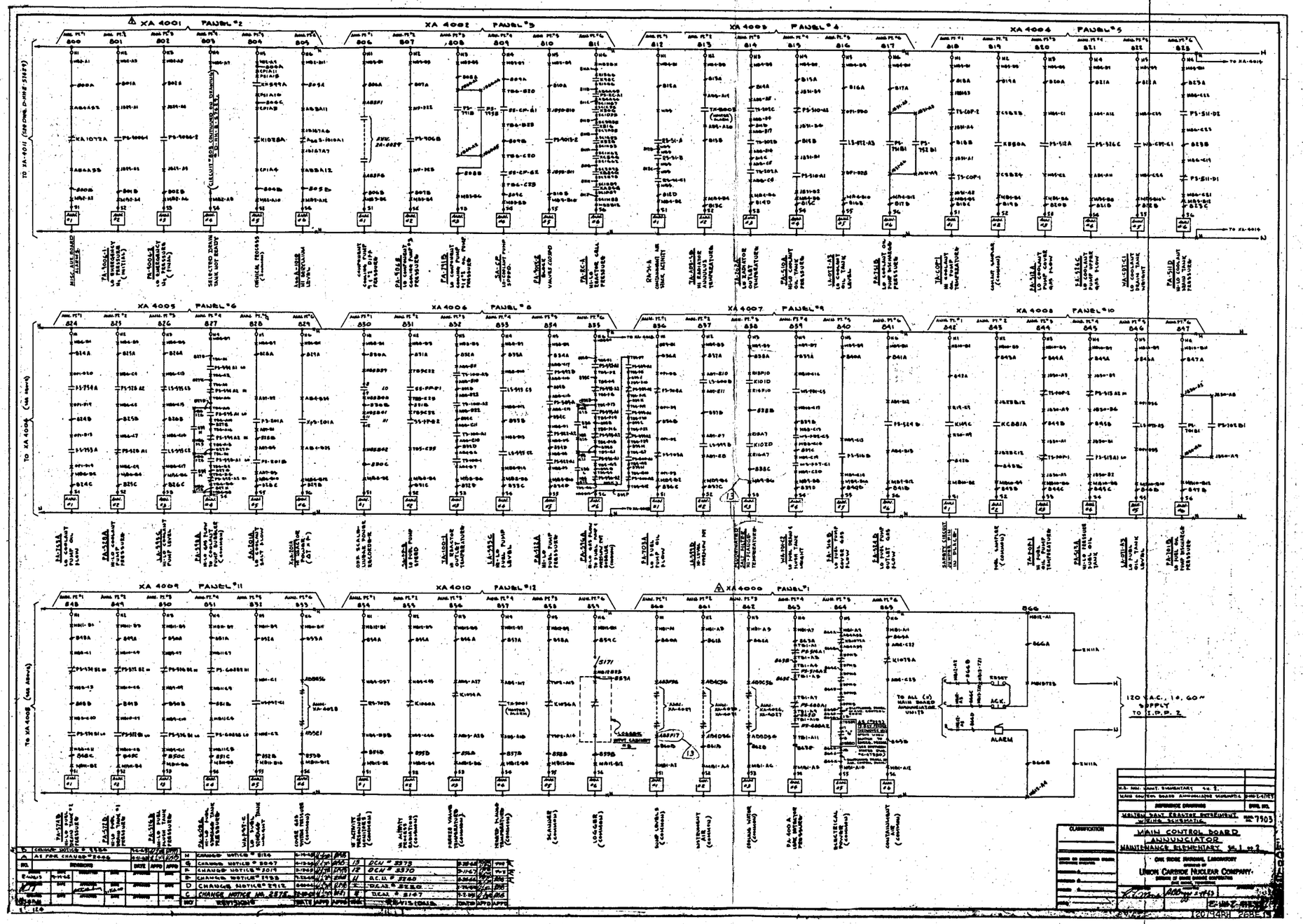


Fig. 4.1.52. Main control board annunciator, maintenance elementary, sheet 1 of 2.

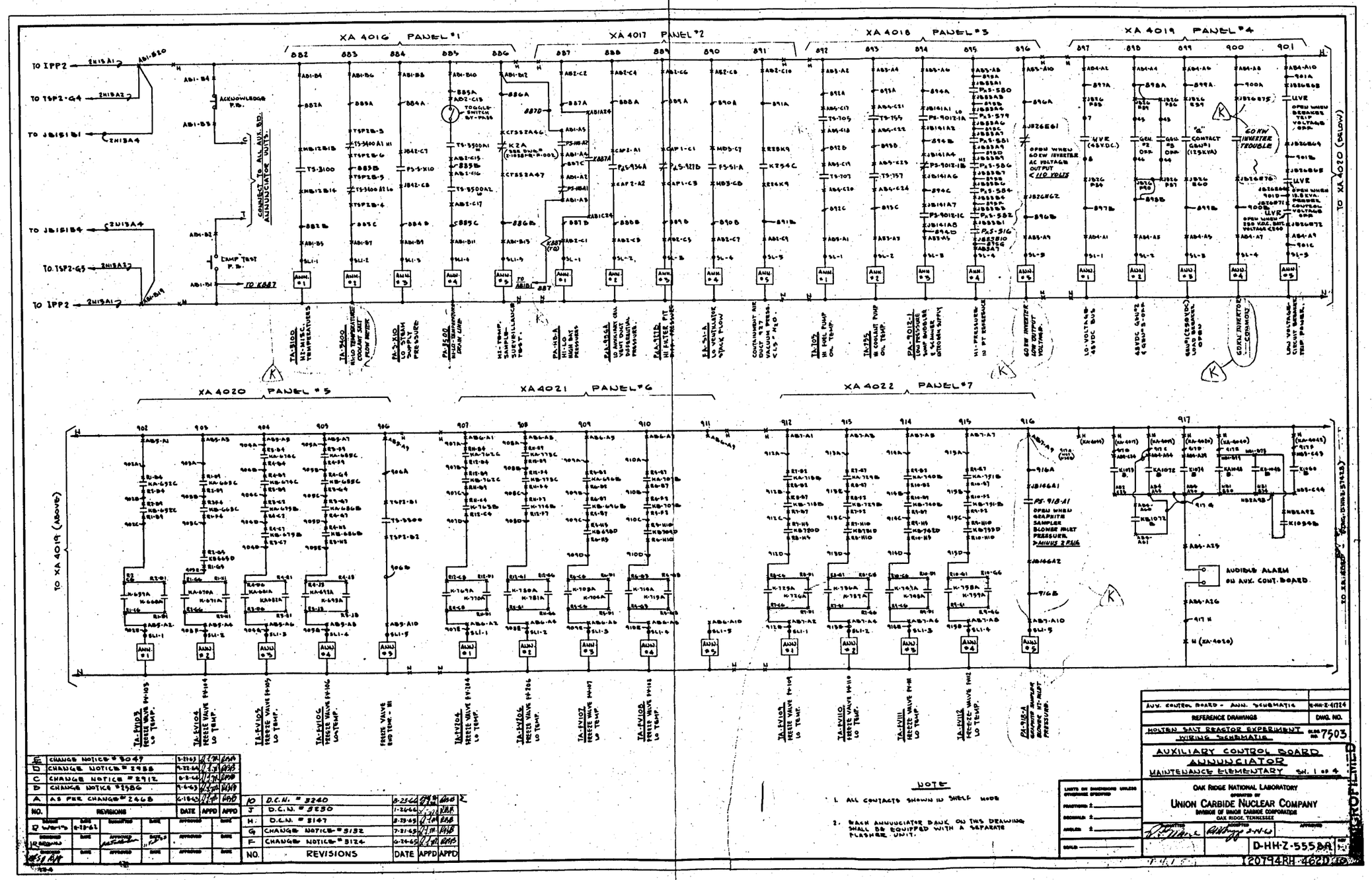


Fig. 4.1.53. Auxiliary control board annunciator, sheet 1 of 4.

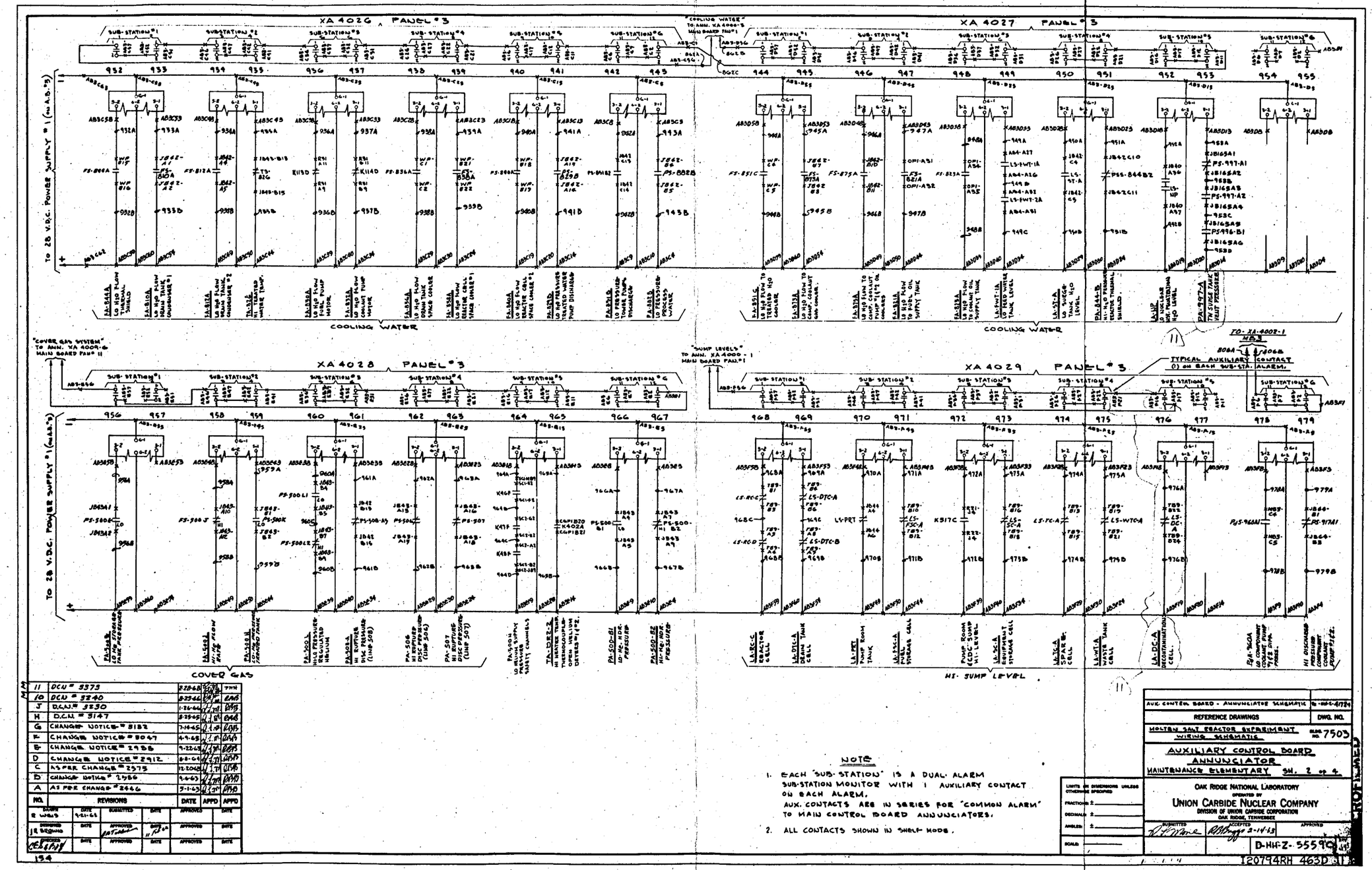


Fig. 4.1.54. Auxiliary control board annunciator, sheet 2 of 4.

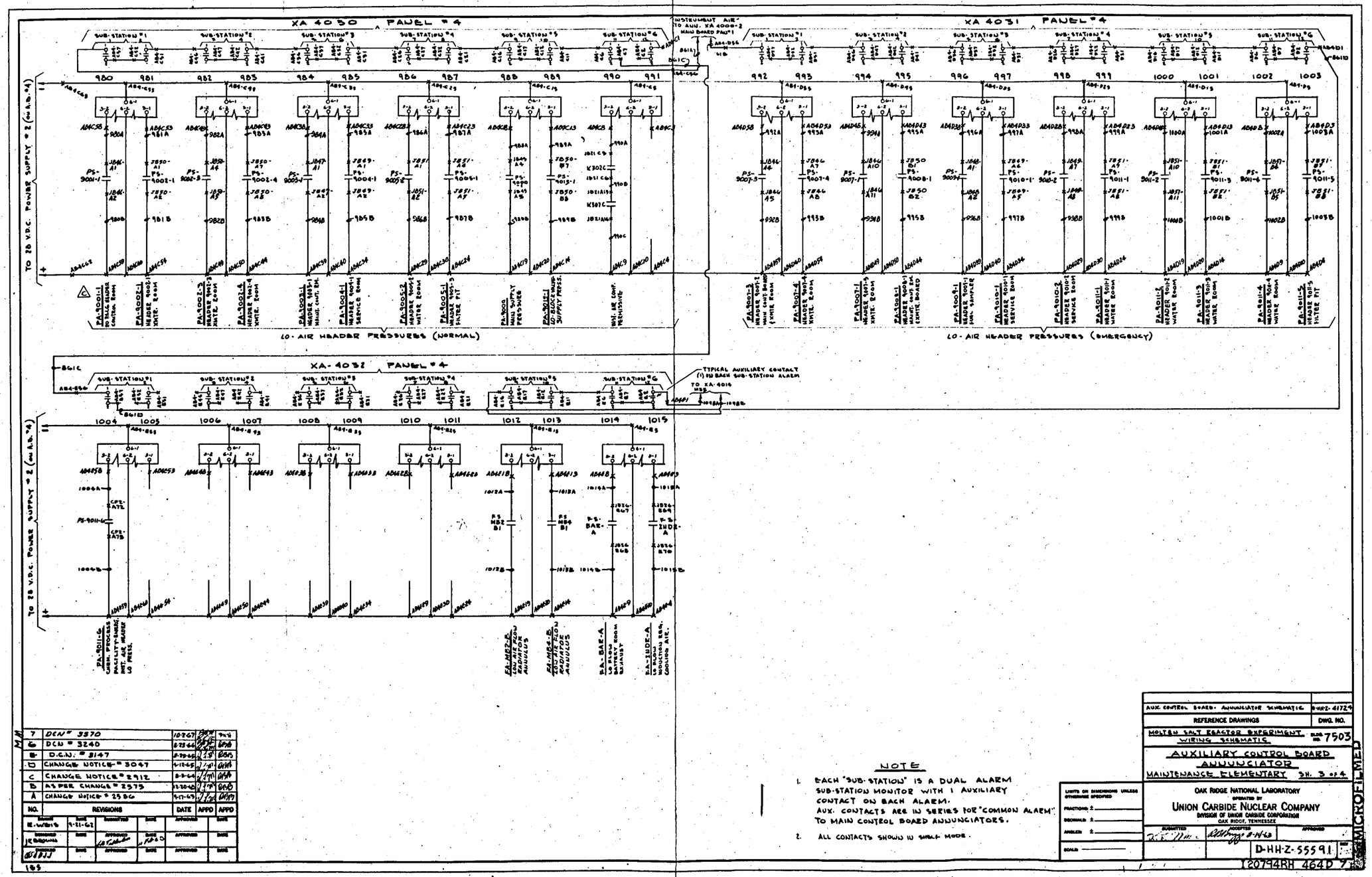


Fig. 4.1.55. Auxiliary control board annunciator, sheet 3 of 4.

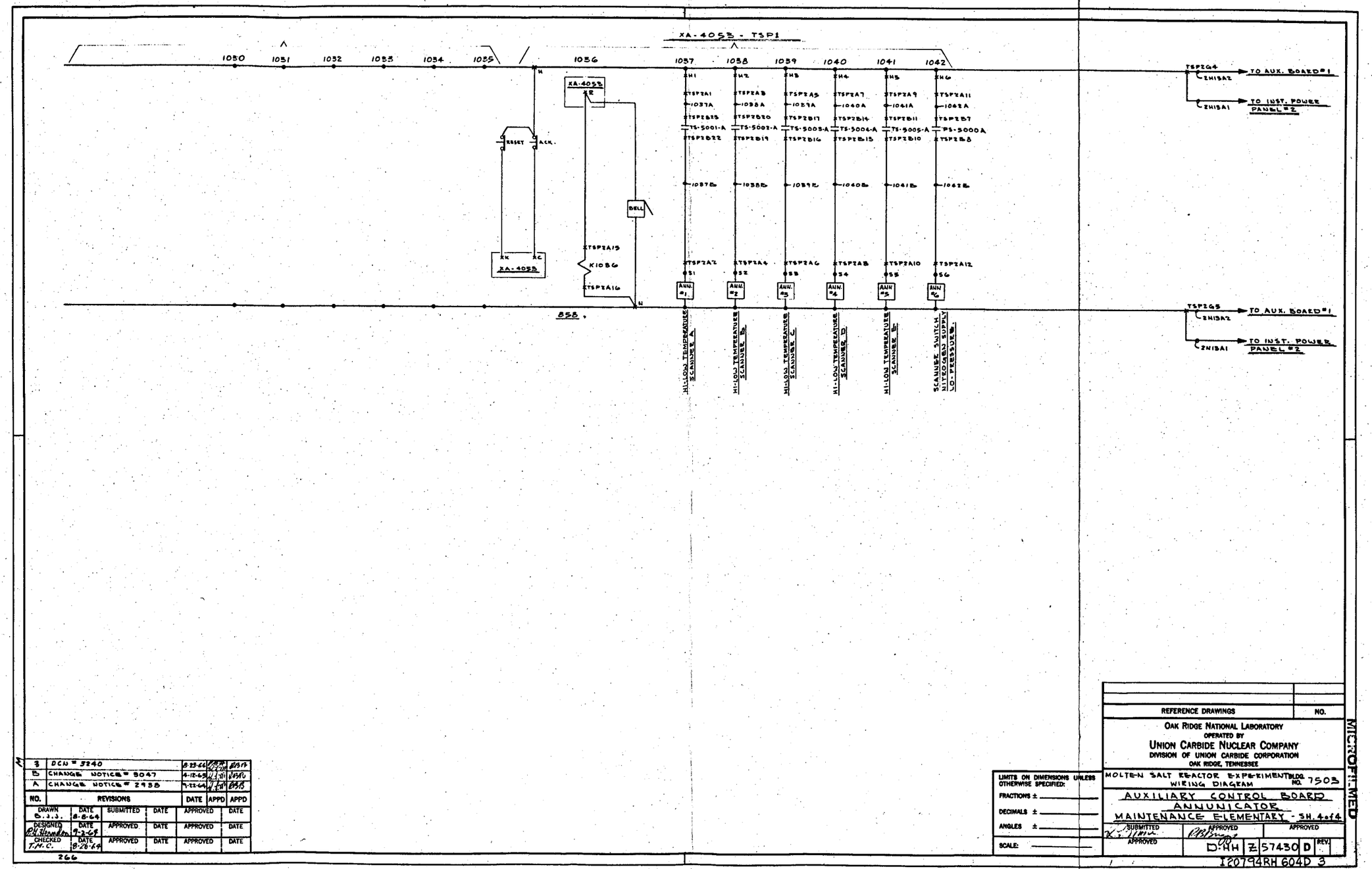


| NO. | REVISIONS | DATE | APPD | APPD |
|---|---|---|---|---|
| 3 | DCN # 5240 | 8-25-66 | | |
| B | CHANGE NOTICE # 5047 | 4-12-65 | | |
| A | CHANGE NOTICE # 2938 | 7-22-64 | | |

| DRAWN | DATE | SUBMITTED | DATE | APPROVED | DATE |
|---|---|---|---|---|---|
| D.J.J. | 8-8-64 | | | | |
| DESIGNED | DATE | APPROVED | DATE | APPROVED | DATE |
| | 7-2-64 | | | | |
| CHECKED | DATE | APPROVED | DATE | APPROVED | DATE |
| T.M.C. | 8-26-64 | | | | |

266

LIMITS ON DIMENSIONS UNLESS OTHERWISE SPECIFIED:
FRACTIONS ±
DECIMALS ±
ANGLES ±
SCALE:

REFERENCE DRAWINGS | NO.

OAK RIDGE NATIONAL LABORATORY
OPERATED BY
UNION CARBIDE NUCLEAR COMPANY
DIVISION OF UNION CARBIDE CORPORATION
OAK RIDGE, TENNESSEE

MOLTEN SALT REACTOR EXPERIMENT WIRING DIAGRAM BLDG. NO. 7503

AUXILIARY CONTROL BOARD
ANNUNICATOR
MAINTENANCE ELEMENTARY - SH. 4 of 4

SUBMITTED | APPROVED | APPROVED | APPROVED

D-HH Z 57430 D REV.

I20794RH604D 3

MICROFILMED

Fig. 4.1.56. Auxiliary control board annunciator, sheet 4 of 4.

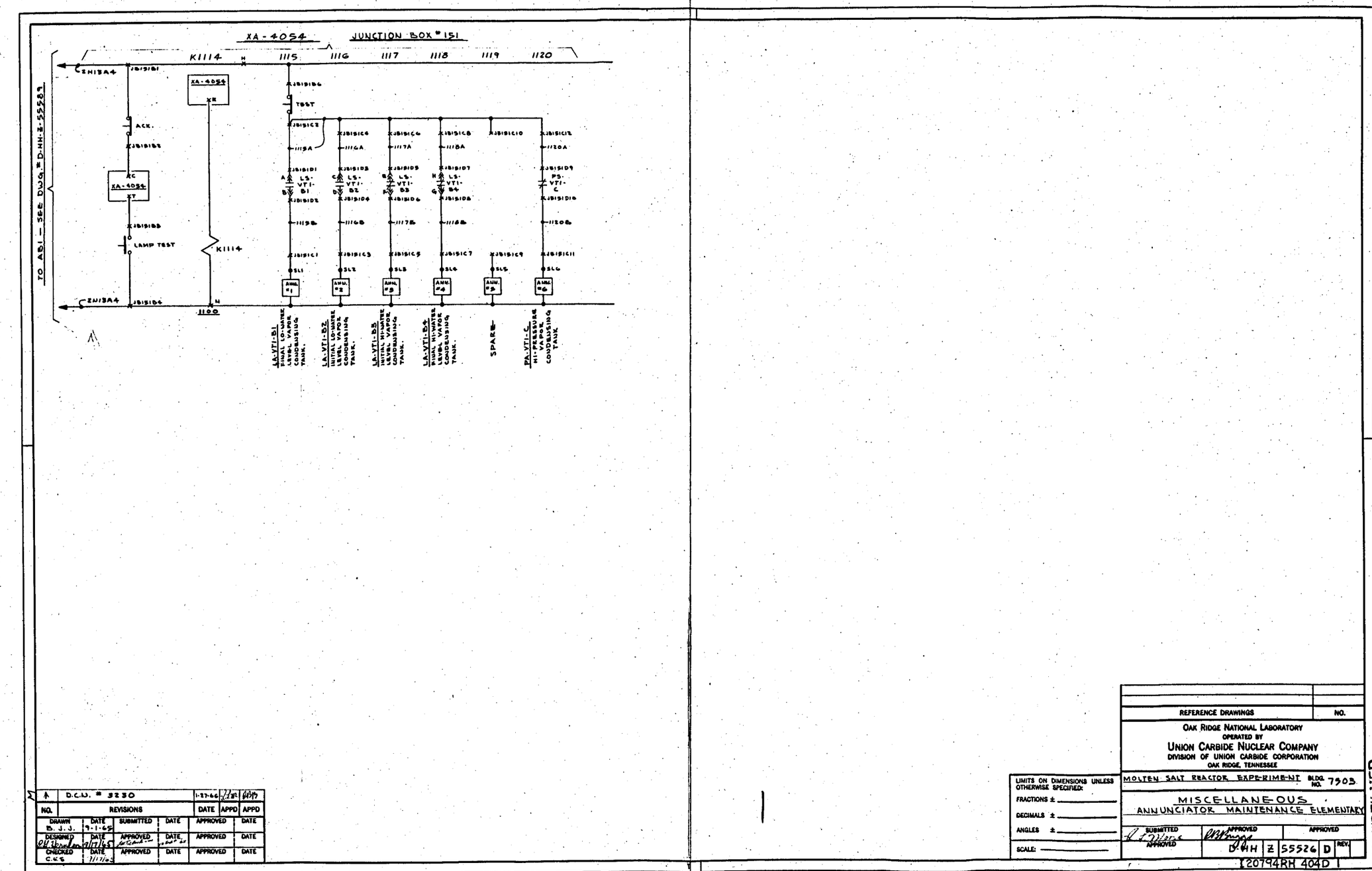


Fig. 4.1.57. Nuclear control board annunciator, maintenance elementary.

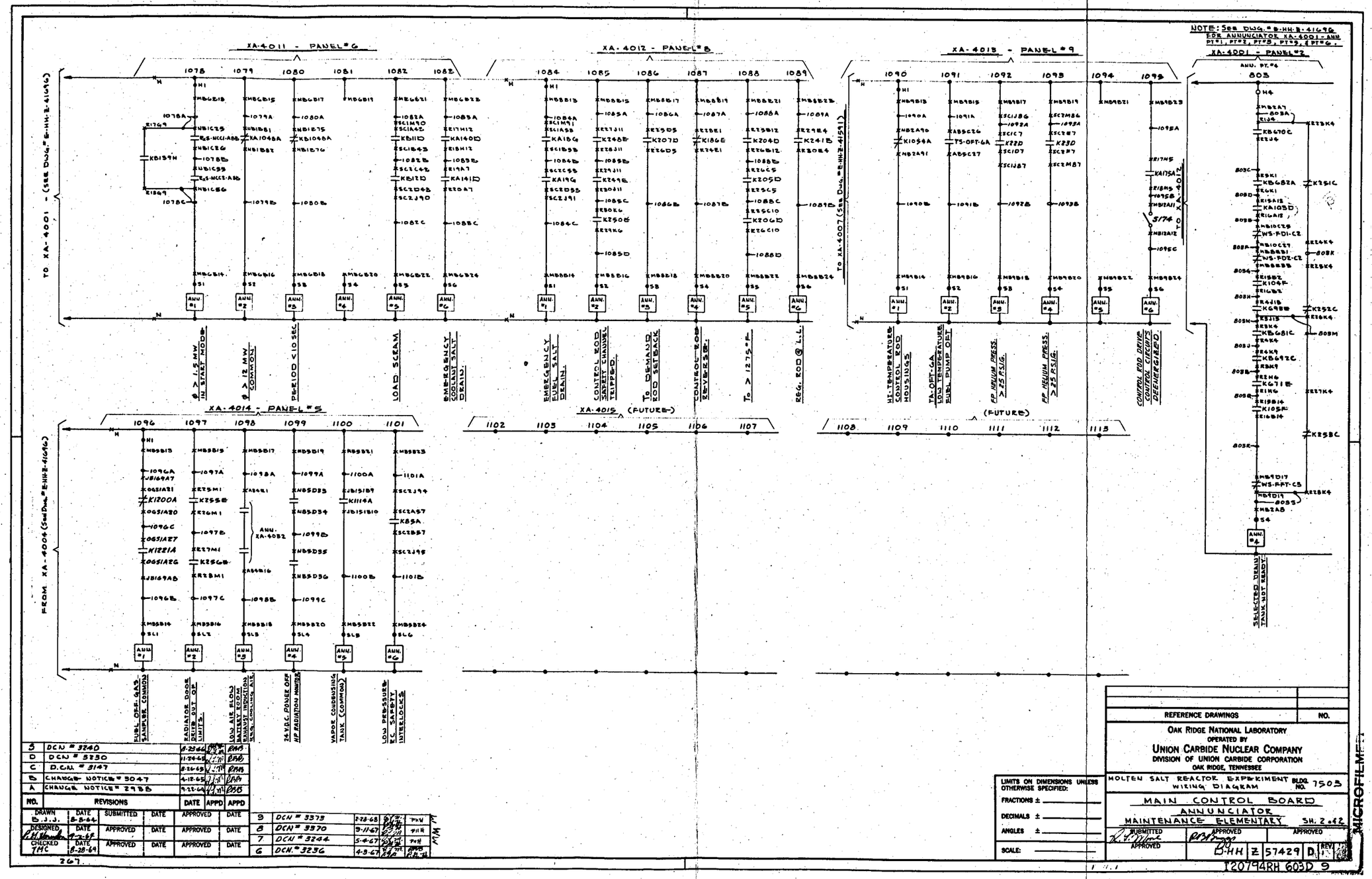


Fig. 4.1.58. Main control board annunciator, maintenance elementary.

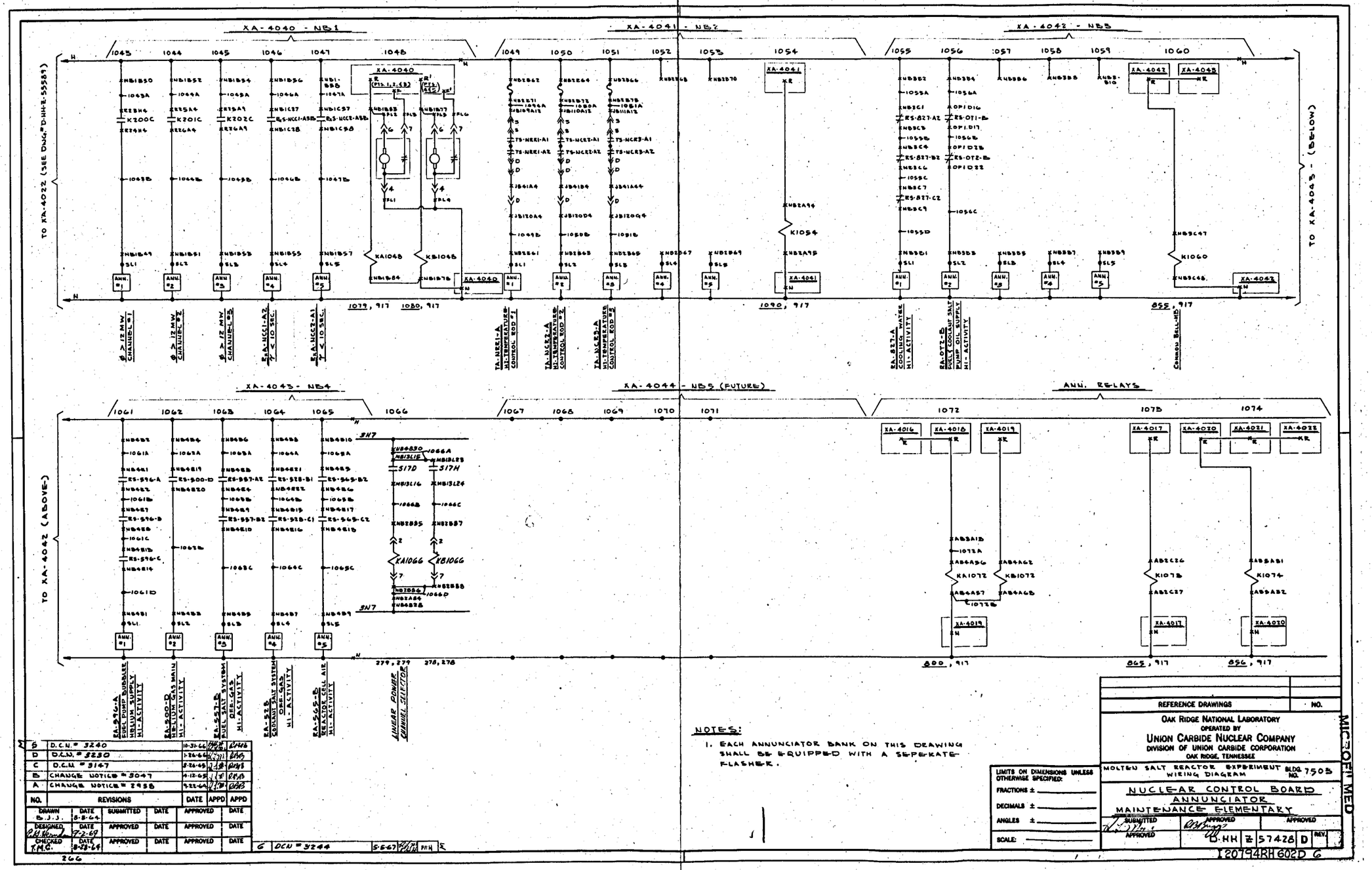


Fig. 4.1.59. Miscellaneous annunciator, maintenance elementary.

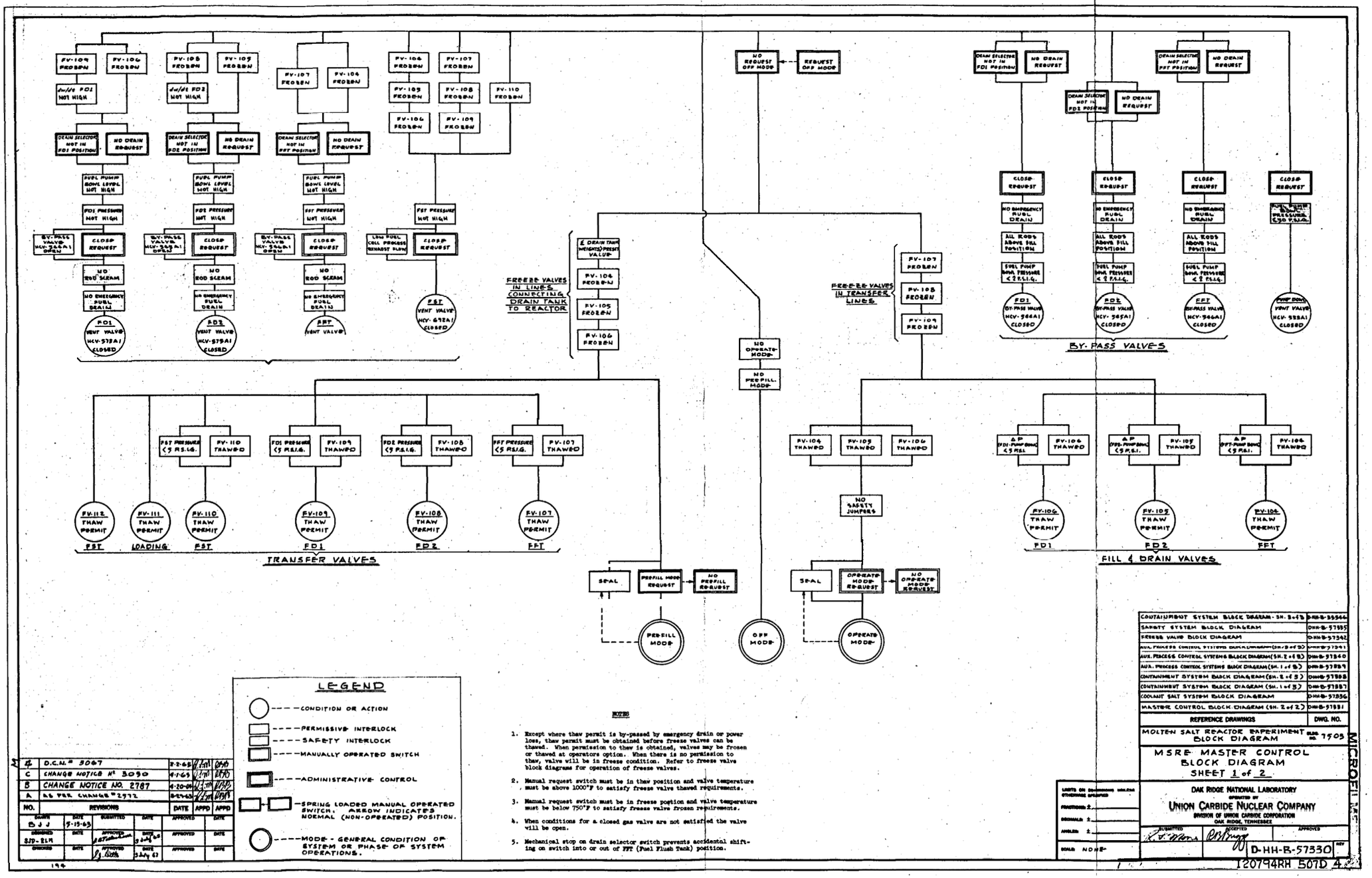


Fig. 4.1.60. MSRE master control, block diagram, sheet 1 of 2.

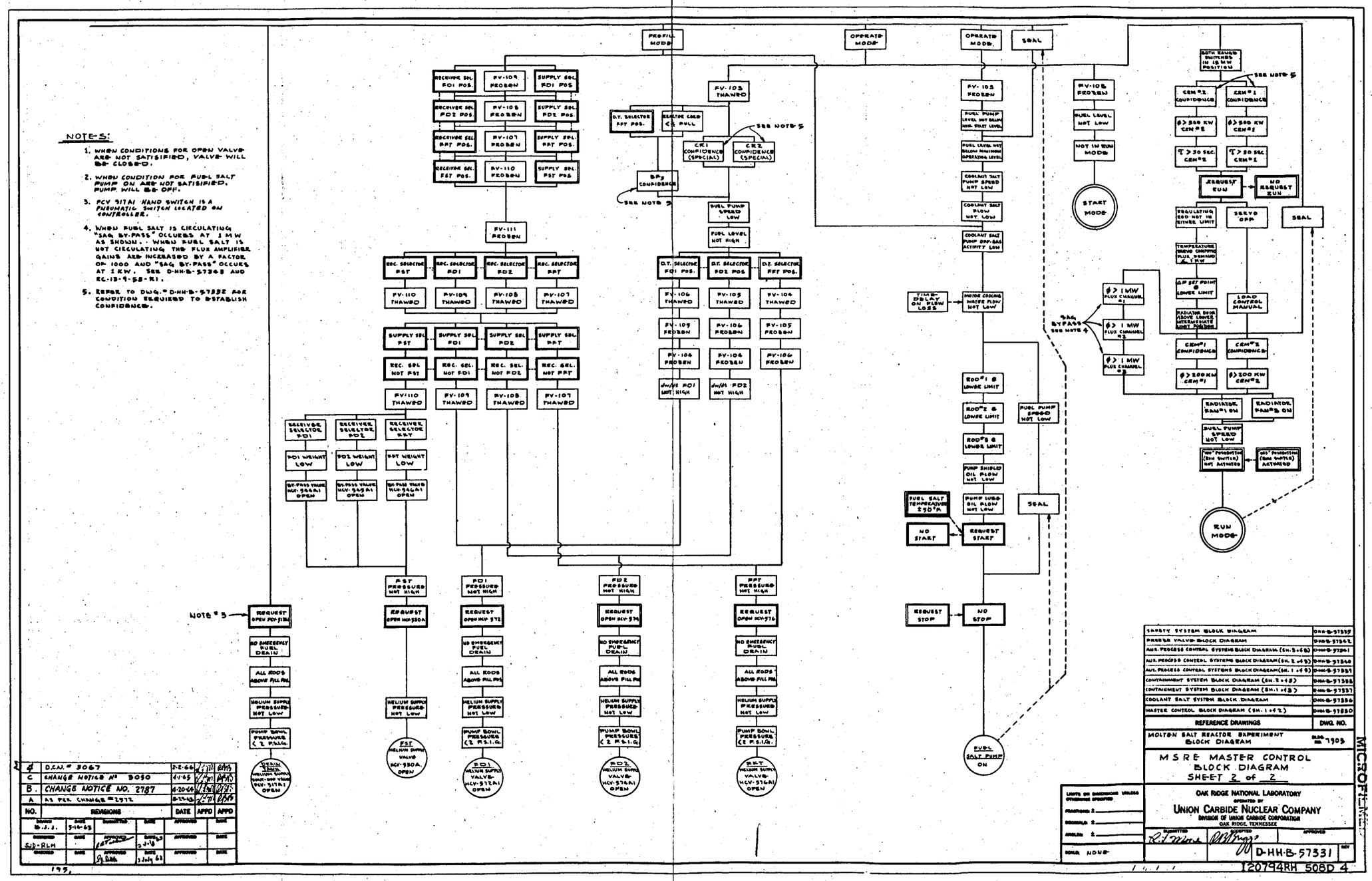


Fig. 4.1.61. MSRE master control, block diagram, sheet 2 of 2.

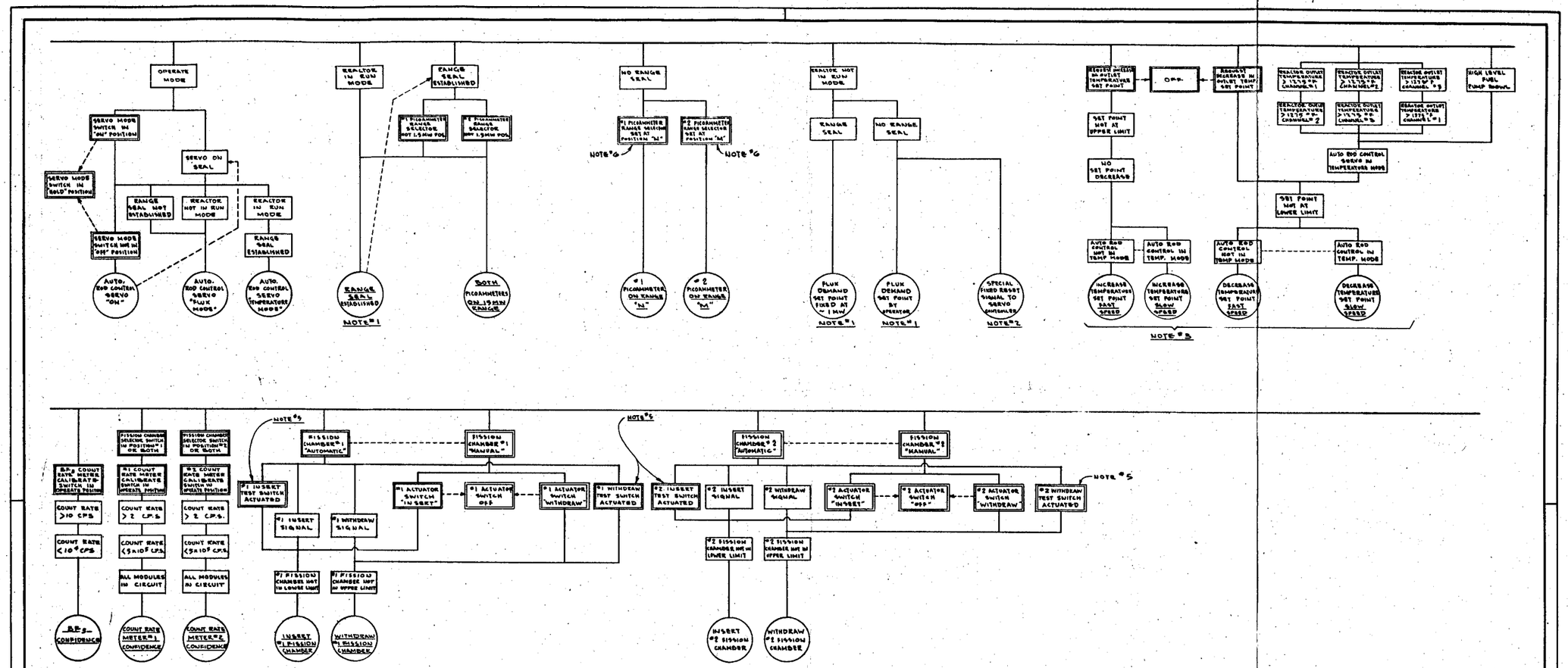


NOTES:

1. THE RANGE SEAL IS USED TO ASSURE SMOOTH TRANSITION BETWEEN TEMPERATURE SERVO AND FLUX SERVO OPERATION WHEN THE REACTOR IS TAKEN OUT OF THE RUN MODE. AFTER THE TRANSITION, THE FLUX DEMAND IS MAINTAINED AT ABOUT 1 MW UNTIL THE OPERATOR ASSUMES CONTROL OF THE DEMAND BY SWITCHING BOTH RANGE SWITCHES TO THE 0-1.5 MW POSITION. HE CAN THEN SELECT RANGE AND PER CENT DEMAND FOR LOW LEVEL SERVO OPERATION.
2. THE RESET MECHANISM IN THE AUTOMATIC ROD CONTROLLER CAN OPERATE PROPERLY ONLY IF THE MICRO-MICRO AMMETER RANGE IS 0-15 MW. WHEN NOT IN THE RUN MODE A FIXED SIGNAL REPLACES THE FLUX SIGNAL TO THE RESET MECHANISM, PROVIDING A RESET WITH A MAXIMUM ERROR OF A FEW DEGREES.
3. TEMPERATURE DEMAND CHANGES CAN BE MADE ONLY AT A FIXED RATE BY MEANS OF A MOTORIZED POTENTIOMETER.
4. REACTOR OPERATING MODES ARE DEFINED ON DRAWING # D-HH-B-57350.
5. FISSION CHAMBER TEST SWITCHES ARE LOCATED ON THE NUCLEAR PANEL IN THE AUXILIARY ROOM.
6. "M" & "N" ARE ARBITRARY POSITIONS ON RANGE SELECTOR SWITCH. RANGE SELECTOR SWITCH HAS 14 POSITIONS COVERING RANGES FROM 0.5 W TO 1.5 MW IN APPROX ½ DECADE STEPS (2 STEPS PER DECADE) SEE DWG. RC-13-12-54. RANGE SELECTOR SWITCH DOES NOT INCLUDE A 15 MW POSITION (SEE NOTE #1 AND DIAGRAM ABOVE)

| NO. | REVISIONS | DATE | APPD | APPD |
|---|---|---|---|---|
| B | D.C.N. # 3067 | 2-2-66 | | |
| A | CHANGE NOTICE Nº 3050 | 3-29-65 | | |

| DRAWN | DATE | SUBMITTED | DATE | APPROVED | DATE |
|---|---|---|---|---|---|
| B.J.J. | 7-10-63 | | | | |
| DESIGNED | DATE | APPROVED | DATE | APPROVED | DATE |
| S.J.D | | | | | |
| CHECKED | DATE | APPROVED | DATE | APPROVED | DATE |

| REFERENCE DRAWINGS | NO. |
|---|---|
| SAFETY SYSTEM BLOCK DIAGRAM | D-HH-B-57335 |
| FREEZE VALVE BLOCK DIAGRAM | D-HH-B-57342 |
| AUX. PROCESS CONTROL SYSTEMS BLOCK DIAGRAM (SH.3 of 3) | D-HH-B-57341 |
| AUX. PROCESS CONTROL SYSTEMS BLOCK DIAGRAM (SH.2 of 3) | D-HH-B-57340 |
| AUX. PROCESS CONTROL SYSTEMS BLOCK DIAGRAM (SH.1 of 3) | D-HH-B-57339 |
| CONTAINMENT SYSTEM BLOCK DIAGRAM (SH.2 of 3) | D-HH-B-57338 |
| CONTAINMENT SYSTEM BLOCK DIAGRAM (SH.1 of 3) | D-HH-B-57337 |
| COOLANT SALT SYSTEM BLOCK DIAGRAM | D-HH-B-57336 |
| MASTER CONTROL BLOCK DIAGRAM (SH. 2 of 2) | D-HH-B-57331 |
| MASTER CONTROL BLOCK DIAGRAM (SH. 1 of 2) | D-HH-B-57330 |
| ROD CONTROL BLOCK DIAGRAM - (SHEET 2 of 2) | D-HH-B-57333 |

LIMITS ON DIMENSIONS UNLESS OTHERWISE SPECIFIED:
FRACTIONS ± ____
DECIMALS ± ____
ANGLES ± ____
SCALE: NONE

OAK RIDGE NATIONAL LABORATORY
OPERATED BY
UNION CARBIDE NUCLEAR COMPANY
DIVISION OF UNION CARBIDE CORPORATION
OAK RIDGE, TENNESSEE

MOLTEN SALT REACTOR EXPERIMENT BLOCK DIAGRAM — BLDG. NO. 7503

ROD CONTROL BLOCK DIAGRAM SHEET 1 of 2

SUBMITTED — APPROVED — APPROVED — APPROVED

D-HH B 57332 D REV.

120794RH 509D 2

MICROFILMED

Fig. 4.1.62. Rod control, block diagram, sheet 1 of 2.

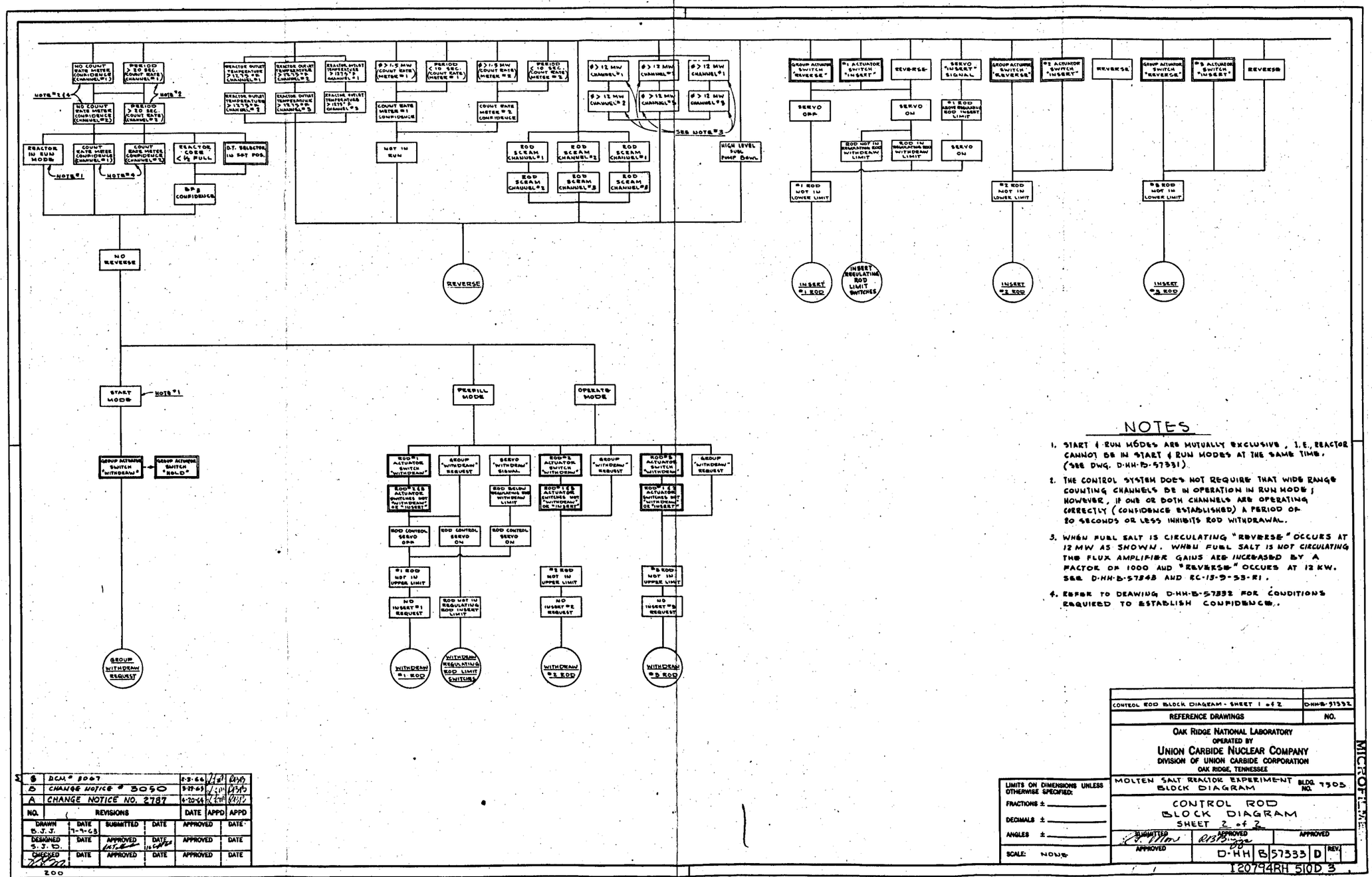


## NOTES

1. START & RUN MODES ARE MUTUALLY EXCLUSIVE, I.E., REACTOR CANNOT BE IN START & RUN MODES AT THE SAME TIME. (SEE DWG. D-HH-B-57331).
2. THE CONTROL SYSTEM DOES NOT REQUIRE THAT WIDE RANGE COUNTING CHANNELS BE IN OPERATION IN RUN MODE; HOWEVER, IF ONE OR BOTH CHANNELS ARE OPERATING CORRECTLY (CONFIDENCE ESTABLISHED) A PERIOD OF 20 SECONDS OR LESS INHIBITS ROD WITHDRAWAL.
3. WHEN FUEL SALT IS CIRCULATING "REVERSE" OCCURS AT 12 MW AS SHOWN. WHEN FUEL SALT IS NOT CIRCULATING THE FLUX AMPLIFIER GAINS ARE INCREASED BY A FACTOR OF 1000 AND "REVERSE" OCCURS AT 12 KW. SEE D-HH-B-57348 AND EC-13-9-53-R1.
4. REFER TO DRAWING D-HH-B-57332 FOR CONDITIONS REQUIRED TO ESTABLISH CONFIDENCE.

| NO. | REVISIONS | DATE | APPD | APPD |
|---|---|---|---|---|
| S | DCN # 8067 | 2-3-66 | | |
| B | CHANGE NOTICE # 3050 | 5-27-65 | | |
| A | CHANGE NOTICE NO. 2787 | 4-20-64 | | |

| DRAWN | DATE | SUBMITTED | DATE | APPROVED | DATE |
|---|---|---|---|---|---|
| B. J. | 7-9-63 | | | | |
| DESIGNED | DATE | APPROVED | DATE | APPROVED | DATE |
| S. J. D. | | | | | |
| CHECKED | DATE | APPROVED | DATE | APPROVED | DATE |
| | | | | | |

200

LIMITS ON DIMENSIONS UNLESS OTHERWISE SPECIFIED:
FRACTIONS ± ____
DECIMALS ± ____
ANGLES ± ____
SCALE: NONE

CONTROL ROD BLOCK DIAGRAM - SHEET 1 of 2 | D-HH-B-57332
REFERENCE DRAWINGS | NO.

OAK RIDGE NATIONAL LABORATORY
OPERATED BY
UNION CARBIDE NUCLEAR COMPANY
DIVISION OF UNION CARBIDE CORPORATION
OAK RIDGE, TENNESSEE

MOLTEN SALT REACTOR EXPERIMENT BLOCK DIAGRAM | BLDG. NO. 7503

CONTROL ROD
BLOCK DIAGRAM
SHEET 2 of 2

SUBMITTED | APPROVED | APPROVED
APPROVED

D-HH B 57333 D REV.

I20794RH 510D 3

MICROFILMED

Fig. 4.1.63. Control rod, block diagram, sheet 2 of 2.

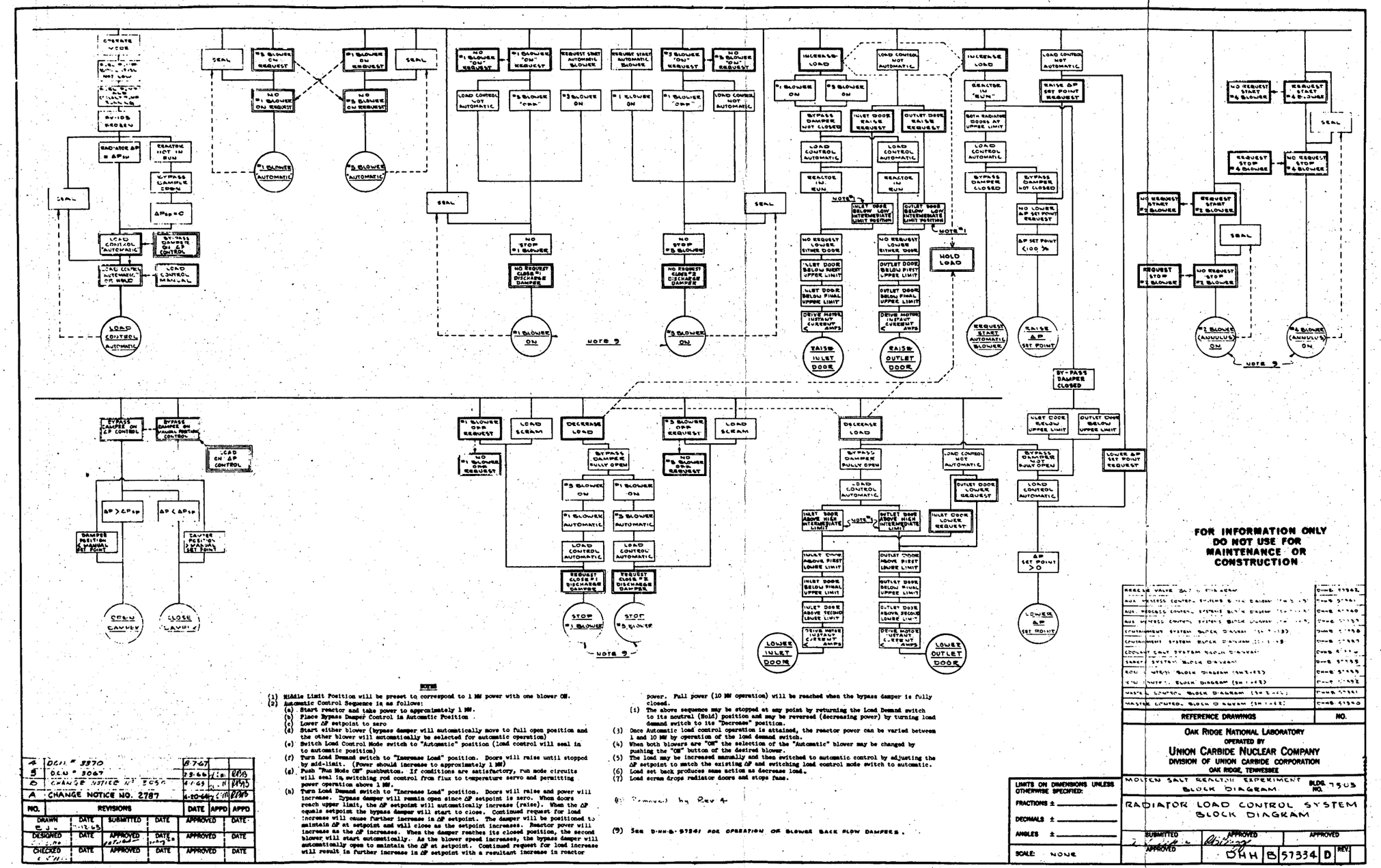


NOTES

(1) Middle Limit Position will be preset to correspond to 1 MW power with one blower ON.
(2) Automatic Control Sequence is as follows:
  (a) Start reactor and take power to approximately 1 MW.
  (b) Place Bypass Damper Control in Automatic Position
  (c) Lower ΔP setpoint to zero
  (d) Start either blower (bypass damper will automatically move to full open position and the other blower will automatically be selected for automatic operation)
  (e) Switch Load Control Mode switch to "Automatic" position (load control will seal in to automatic position)
  (f) Turn Load Demand switch to "Increase Load" position. Doors will raise until stopped by mid-limit. (Power should increase to approximately 1 MW)
  (g) Push "Run Mode ON" pushbutton. If conditions are satisfactory, run mode circuits will seal in, switching rod control from flux to temperature servo and permitting power operation above 1 MW.
  (h) Turn Load Demand switch to "Increase Load" position. Doors will raise and power will increase. Bypass damper will remain open since ΔP setpoint is zero. When doors reach upper limit, the ΔP setpoint will automatically increase (raise). When the ΔP equals setpoint the bypass damper will start to close. Continued request for load increase will cause further increase in ΔP setpoint. The damper will be positioned to maintain ΔP at setpoint and will close as the setpoint increases. Reactor power will increase as the ΔP increases. When the damper reaches its closed position, the second blower will start automatically. As the blower speed increases, the bypass damper will automatically open to maintain the ΔP at setpoint. Continued request for load increase will result in further increase in ΔP setpoint with a resultant increase in reactor power. Full power (10 MW operation) will be reached when the bypass damper is fully closed.
  (i) The above sequence may be stopped at any point by returning the Load Demand switch to its neutral (Hold) position and may be reversed (decreasing power) by turning load demand switch to its "Decrease" position.
(3) Once Automatic load control operation is attained, the reactor power can be varied between 1 and 10 MW by operation of the load demand switch.
(4) When both blowers are "ON" the selection of the "Automatic" blower may be changed by pushing the "ON" button of the desired blower.
(5) The load may be increased manually and then switched to automatic control by adjusting the ΔP setpoint to match the existing ΔP and switching load control mode switch to automatic.
(6) Load set back produces same action as decrease load.
(7) Load scram drops radiator doors and stops fans.
(8) Removed by Rev 4
(9) See D-HH-B-57341 for operation of blower back flow dampers.

| NO. | REVISIONS | DATE | APPD | APPD |
|---|---|---|---|---|
| 4 | DCN # 3370 | 8-7-67 | | |
| 3 | DCN # 3067 | 12-9-66 | | |
| 2 | CHANGE NOTICE NO. 2850 | 4-1-65 | | |
| A | CHANGE NOTICE NO. 2787 | 4-20-64 | | |

Fig. 4.1.64. Radiator load control system, block diagram.

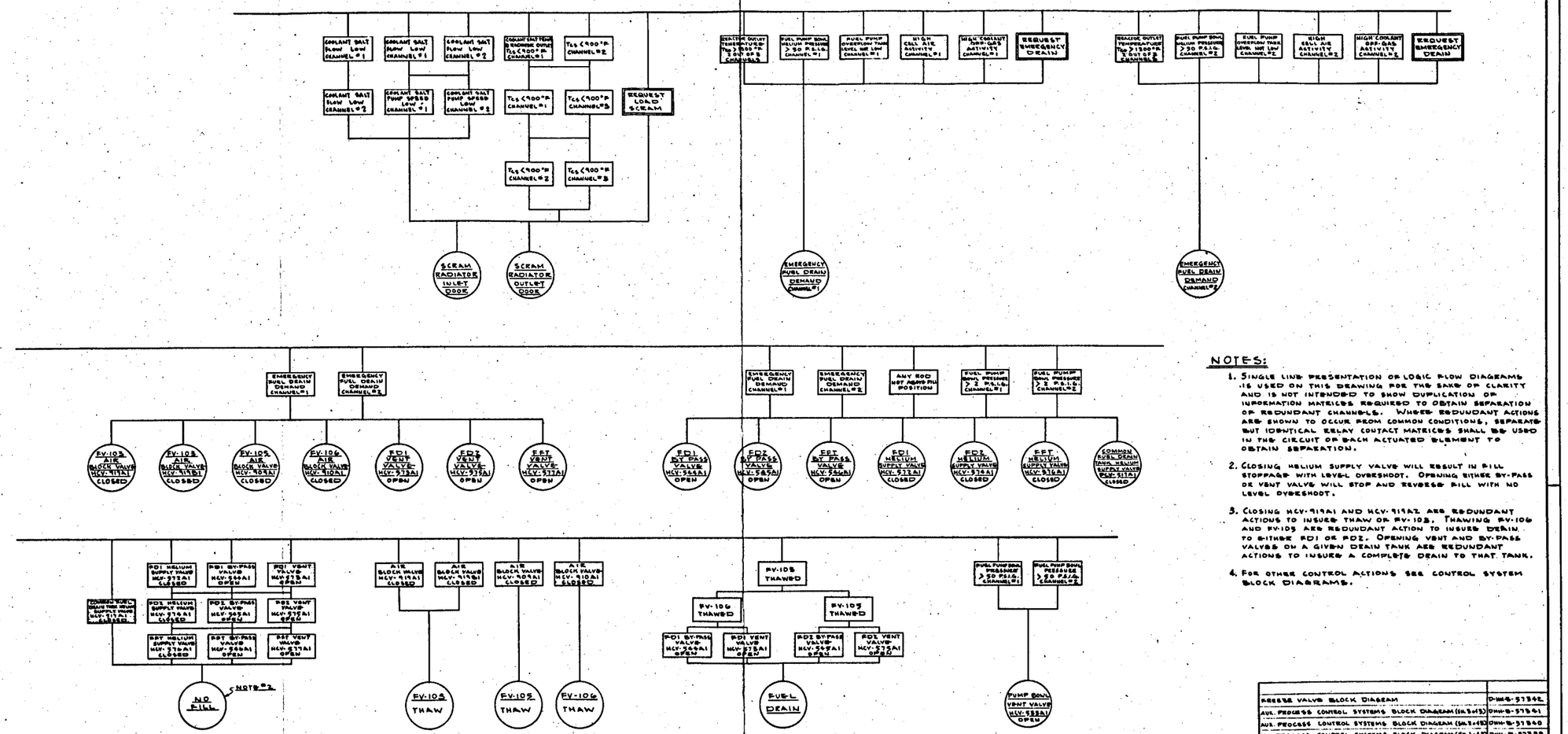


NOTES:

1. SINGLE LINE PRESENTATION OF LOGIC FLOW DIAGRAMS IS USED ON THIS DRAWING FOR THE SAKE OF CLARITY AND IS NOT INTENDED TO SHOW DUPLICATION OF INFORMATION MATRICES REQUIRED TO OBTAIN SEPARATION OF REDUNDANT CHANNELS. WHERE REDUNDANT ACTIONS ARE SHOWN TO OCCUR FROM COMMON CONDITIONS, SEPARATE BUT IDENTICAL RELAY CONTACT MATRICES SHALL BE USED IN THE CIRCUIT OF EACH ACTUATED ELEMENT TO OBTAIN SEPARATION.
2. CLOSING HELIUM SUPPLY VALVE WILL RESULT IN FILL STOPPAGE WITH LEVEL OVERSHOOT. OPENING EITHER BY-PASS OR VENT VALVE WILL STOP AND REVERSE FILL WITH NO LEVEL OVERSHOOT.
3. CLOSING HCV-919A1 AND HCV-919A2 ARE REDUNDANT ACTIONS TO INSURE THAW OF FV-103. THAWING FV-106 AND FV-105 ARE REDUNDANT ACTION TO INSURE DRAIN TO EITHER FD1 OR FD2. OPENING VENT AND BY-PASS VALVES ON A GIVEN DRAIN TANK ARE REDUNDANT ACTIONS TO INSURE A COMPLETE DRAIN TO THAT TANK.
4. FOR OTHER CONTROL ACTIONS SEE CONTROL SYSTEM BLOCK DIAGRAMS.

| REFERENCE DRAWINGS | NO. |
|---|---|
| FREEZE VALVE BLOCK DIAGRAM | ORNL-B-57342 |
| AUX. PROCESS CONTROL SYSTEMS BLOCK DIAGRAM (SH.3 of 5) | ORNL-B-57341 |
| AUX. PROCESS CONTROL SYSTEMS BLOCK DIAGRAM (SH.2 of 5) | ORNL-B-57340 |
| AUX. PROCESS CONTROL SYSTEMS BLOCK DIAGRAM (SH.1 of 5) | ORNL-B-57339 |
| CONTAINMENT SYSTEM BLOCK DIAGRAM (SH.2 of 3) | ORNL-B-57338 |
| CONTAINMENT SYSTEM BLOCK DIAGRAM (SH.1 of 3) | ORNL-B-57337 |
| COOLANT SALT SYSTEM BLOCK DIAGRAM | ORNL-B-57336 |
| MASTER CONTROL BLOCK DIAGRAM (SH.2 of 2) | ORNL-B-57331 |
| MASTER CONTROL BLOCK DIAGRAM (SH.1 of 2) | ORNL-B-57330 |

OAK RIDGE NATIONAL LABORATORY
OPERATED BY
UNION CARBIDE NUCLEAR COMPANY
DIVISION OF UNION CARBIDE CORPORATION
OAK RIDGE, TENNESSEE

MOLTEN SALT REACTOR EXPERIMENT BLOCK DIAGRAM — BLDG. NO. 7503

PROCESS SAFETY SYSTEM BLOCK DIAGRAM

SUBMITTED — APPROVED — APPROVED

ORNL B 57335 D REV.

120794RH 512D 3

LIMITS ON DIMENSIONS UNLESS OTHERWISE SPECIFIED:
FRACTIONS ±
DECIMALS ±
ANGLES ±
SCALE: NONE

| NO. | REVISIONS | DATE | APPD | APPD |
|---|---|---|---|---|
| 5 | D.C.N. # 8007 | 2-8-66 | | |
| B | CHANGE NOTICE Nº 3060 | 4-1-65 | | |
| A | AS PER CHANGE # 2572 | 8-24-65 | | |

| DRAWN | DATE | SUBMITTED | DATE | APPROVED | DATE |
|---|---|---|---|---|---|
| B. J. J. | 6-19-63 | | | | |
| DESIGNED | DATE | APPROVED | DATE | APPROVED | DATE |
| RLM-SJD | | | | | |
| CHECKED | DATE | APPROVED | DATE | APPROVED | DATE |

Fig. 4.1.65. Process safety system, block diagram.

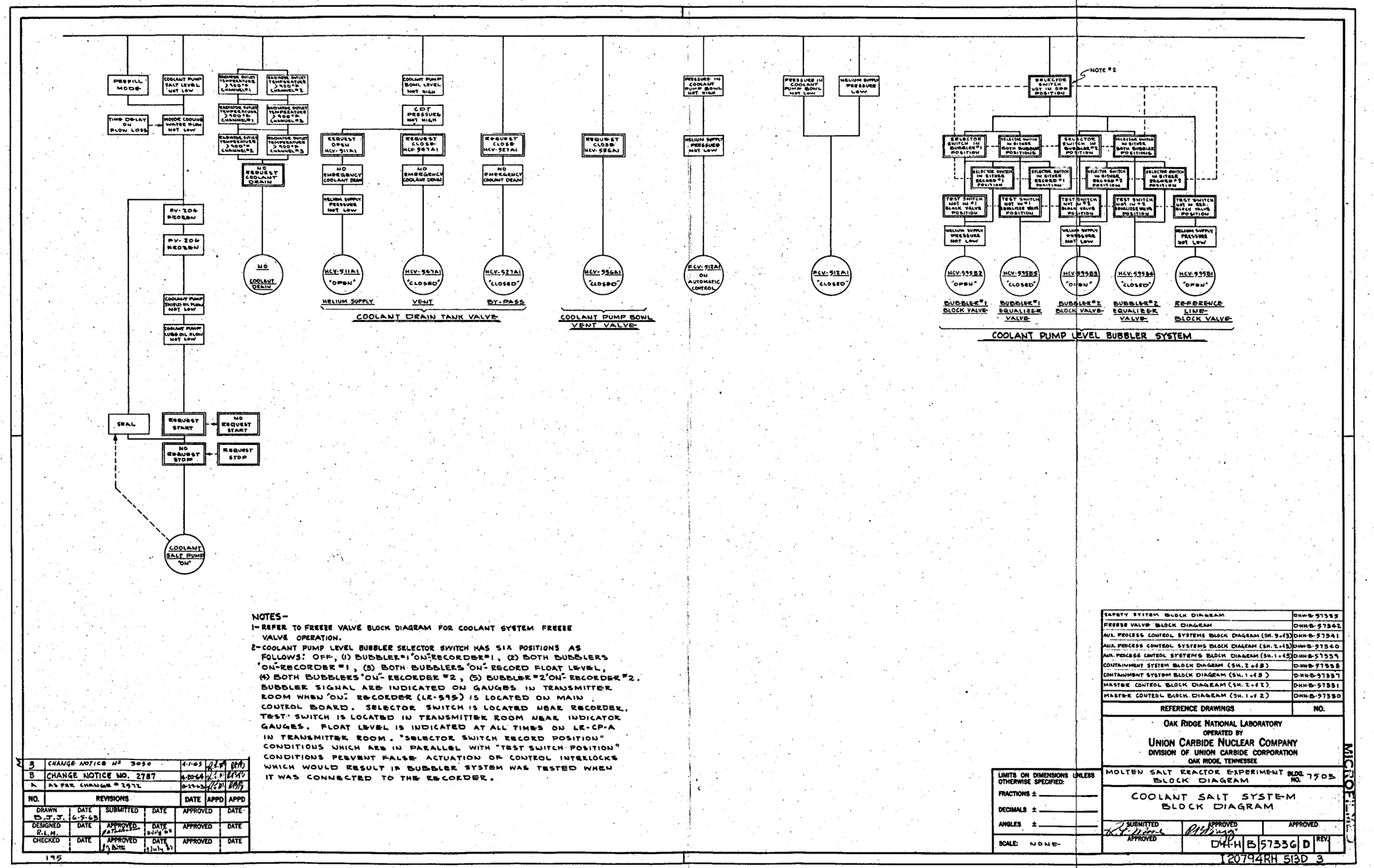


NOTES–

1– REFER TO FREEZE VALVE BLOCK DIAGRAM FOR COOLANT SYSTEM FREEZE VALVE OPERATION.

2– COOLANT PUMP LEVEL BUBBLER SELECTOR SWITCH HAS SIX POSITIONS AS FOLLOWS: OFF, (1) BUBBLER #1 "ON" RECORDER #1, (2) BOTH BUBBLERS "ON" RECORDER #1, (3) BOTH BUBBLERS "ON" RECORD FLOAT LEVEL, (4) BOTH BUBBLERS "ON" RECORDER #2, (5) BUBBLER #2 "ON" RECORDER #2. BUBBLER SIGNAL ARE INDICATED ON GAUGES IN TRANSMITTER ROOM WHEN "ON" RECORDER (LR-595) IS LOCATED ON MAIN CONTROL BOARD. SELECTOR SWITCH IS LOCATED NEAR RECORDER. TEST SWITCH IS LOCATED IN TRANSMITTER ROOM NEAR INDICATOR GAUGES. FLOAT LEVEL IS INDICATED AT ALL TIMES ON LR-CP-A IN TRANSMITTER ROOM. "SELECTOR SWITCH RECORD POSITION" CONDITIONS WHICH ARE IN PARALLEL WITH "TEST SWITCH POSITION" CONDITIONS PREVENT FALSE ACTUATION OF CONTROL INTERLOCKS WHICH WOULD RESULT IF BUBBLER SYSTEM WAS TESTED WHEN IT WAS CONNECTED TO THE RECORDER.

| NO. | REVISIONS | DATE | APPD | APPD |
|---|---|---|---|---|
| B | CHANGE NOTICE Nº 3050 | 4-1-65 | | |
| B | CHANGE NOTICE NO. 2787 | 4-20-64 | | |
| A | AS PER CHANGE # 2972 | 8-27-63 | | |

| DRAWN | DATE | SUBMITTED | DATE | APPROVED | DATE |
|---|---|---|---|---|---|
| D.J.J. | 6-5-63 | | | | |
| DESIGNED R.L.M. | DATE | APPROVED | DATE 30 July 63 | APPROVED | DATE |
| CHECKED | DATE | APPROVED | DATE 30 July 63 | APPROVED | DATE |

| REFERENCE DRAWINGS | NO. |
|---|---|
| SAFETY SYSTEM BLOCK DIAGRAM | ORNL-B-57535 |
| FREEZE VALVE BLOCK DIAGRAM | ORNL-B-57542 |
| AUX. PROCESS CONTROL SYSTEMS BLOCK DIAGRAM (SH. 3 of 3) | ORNL-B-57541 |
| AUX. PROCESS CONTROL SYSTEMS BLOCK DIAGRAM (SH. 2 of 3) | ORNL-B-57540 |
| AUX. PROCESS CONTROL SYSTEMS BLOCK DIAGRAM (SH. 1 of 3) | ORNL-B-57539 |
| CONTAINMENT SYSTEM BLOCK DIAGRAM (SH. 2 of 3) | ORNL-B-57538 |
| CONTAINMENT SYSTEM BLOCK DIAGRAM (SH. 1 of 3) | ORNL-B-57537 |
| MASTER CONTROL BLOCK DIAGRAM (SH. 2 of 2) | ORNL-B-57531 |
| MASTER CONTROL BLOCK DIAGRAM (SH. 1 of 2) | ORNL-B-57530 |

OAK RIDGE NATIONAL LABORATORY
OPERATED BY
UNION CARBIDE NUCLEAR COMPANY
DIVISION OF UNION CARBIDE CORPORATION
OAK RIDGE, TENNESSEE

MOLTEN SALT REACTOR EXPERIMENT BLOCK DIAGRAM — BLDG. NO. 7503

COOLANT SALT SYSTEM BLOCK DIAGRAM

LIMITS ON DIMENSIONS UNLESS OTHERWISE SPECIFIED:
FRACTIONS ±
DECIMALS ±
ANGLES ±
SCALE: NONE

SUBMITTED — APPROVED — APPROVED — APPROVED

ORNL B 57336 D REV.

T20794RH 513D 3

Fig. 4.1.66. Coolant salt system, block diagram.

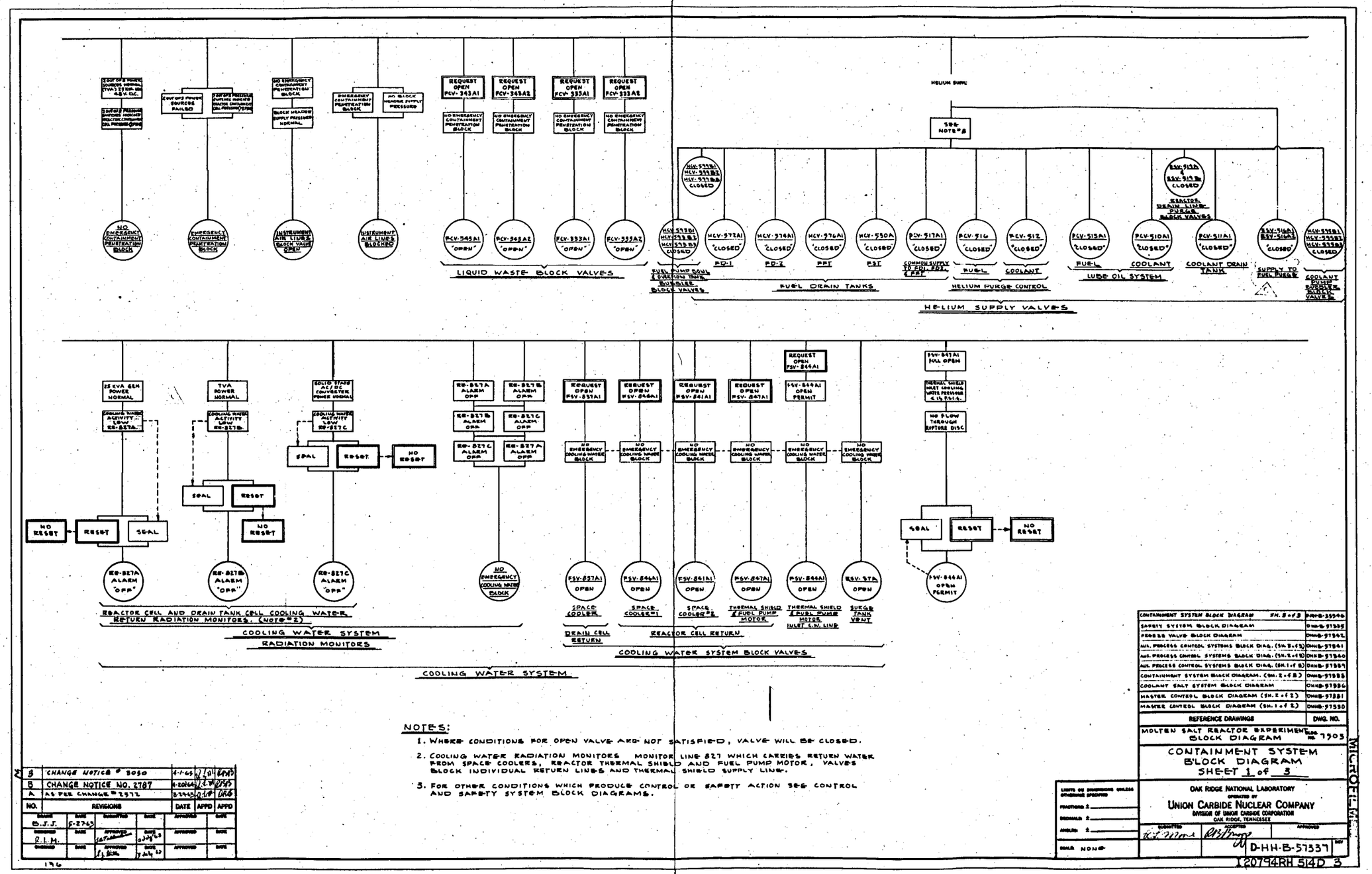


Fig. 4.1.67. Containment system, block diagrams, sheet 1 of 3.

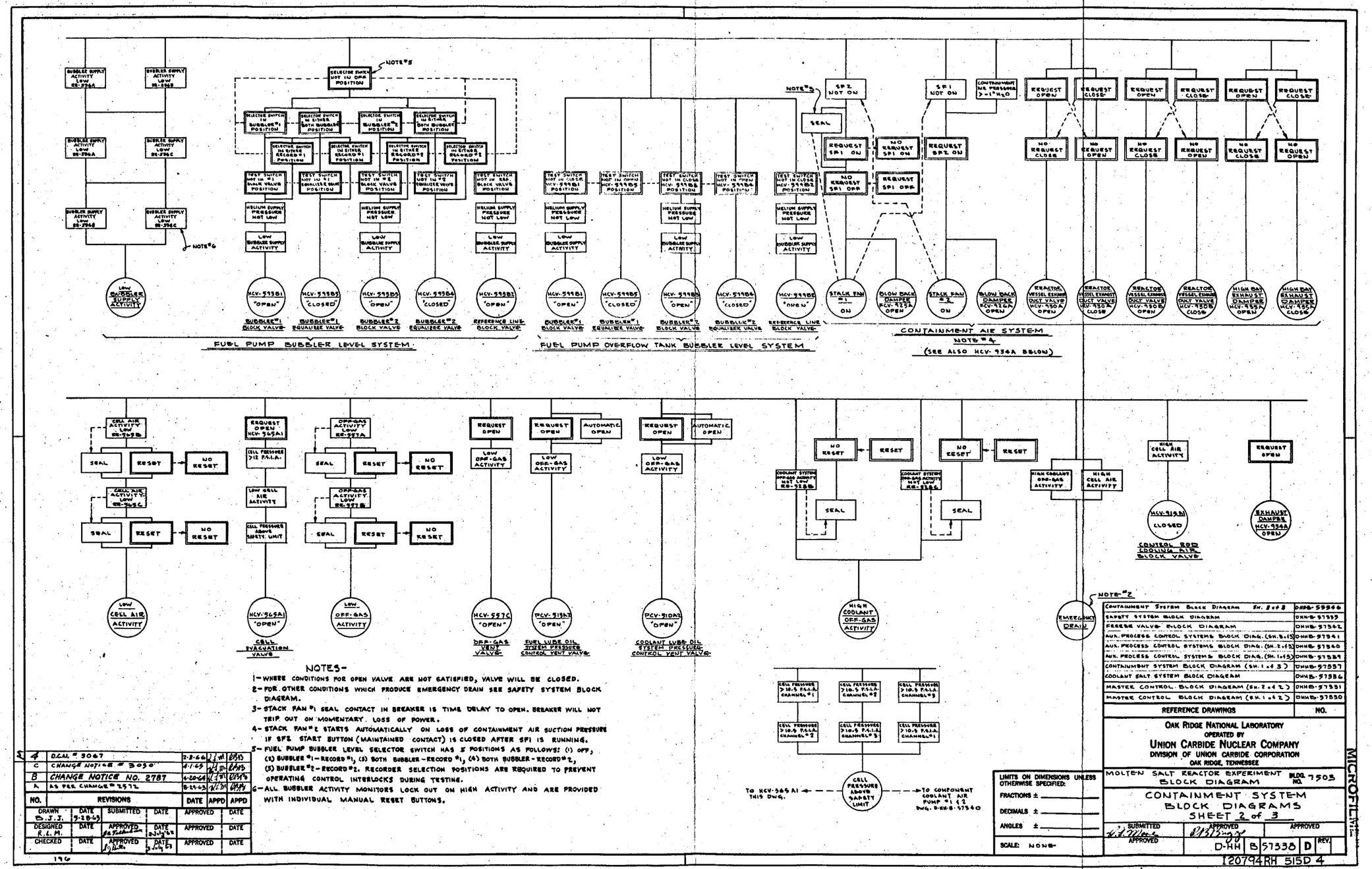


Fig. 4.1.68. Containment system, block diagrams, sheet 2 of 3.

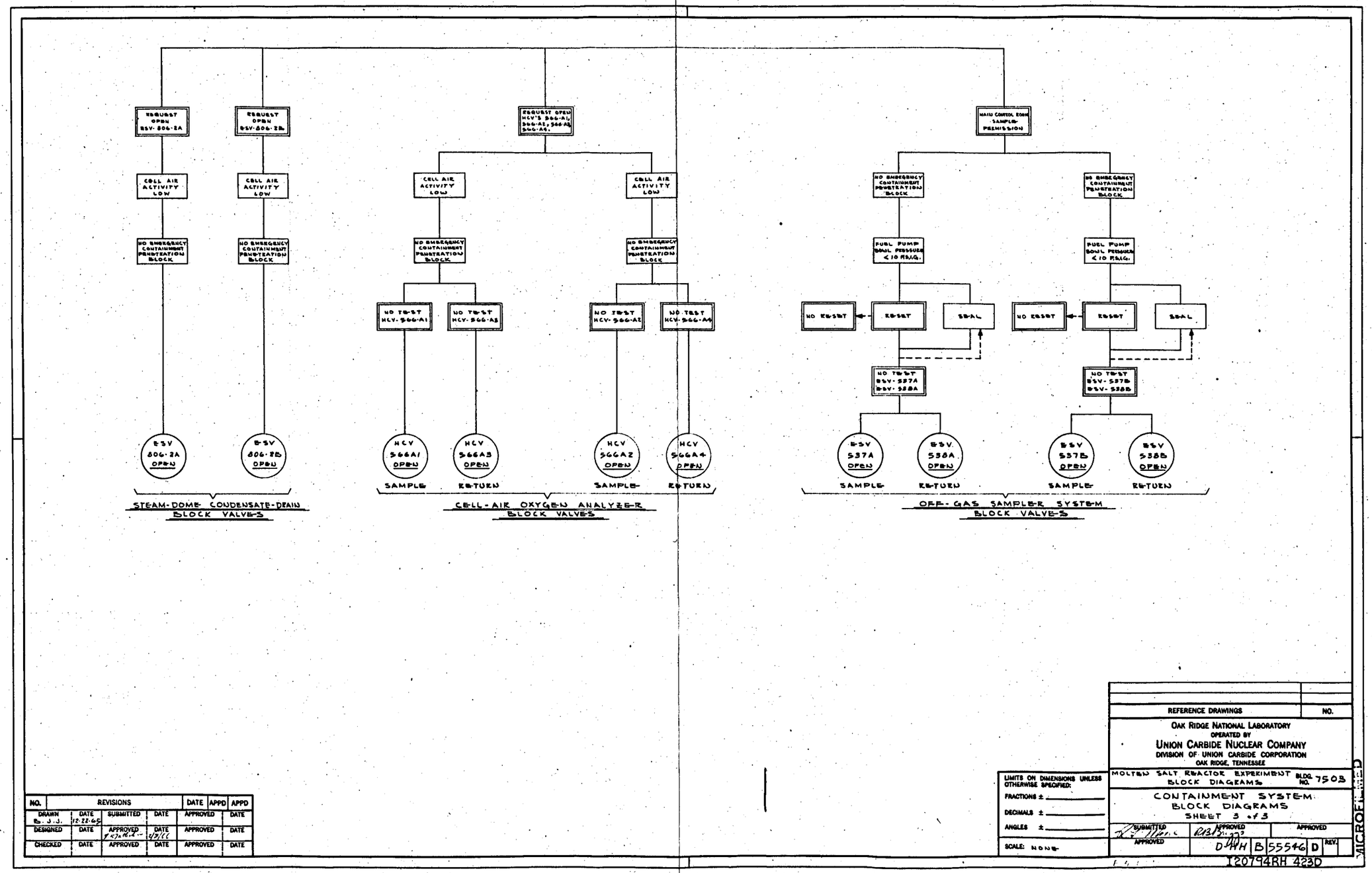


Fig. 4.1.69. Containment system, block diagrams, sheet 3 of 3.

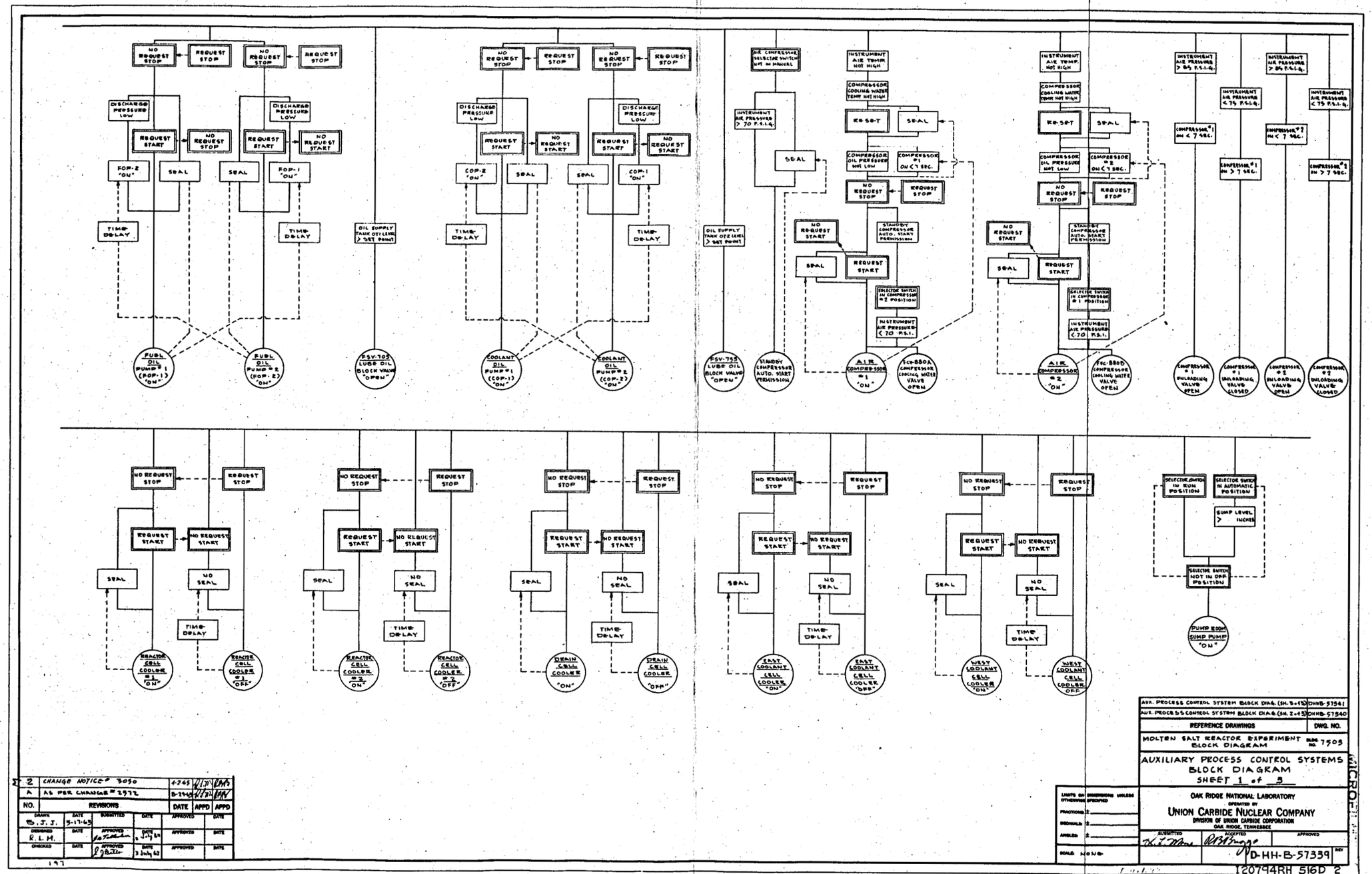


Fig. 4.1.70. Auxiliary process control systems, block diagram, sheet 1 of 3.

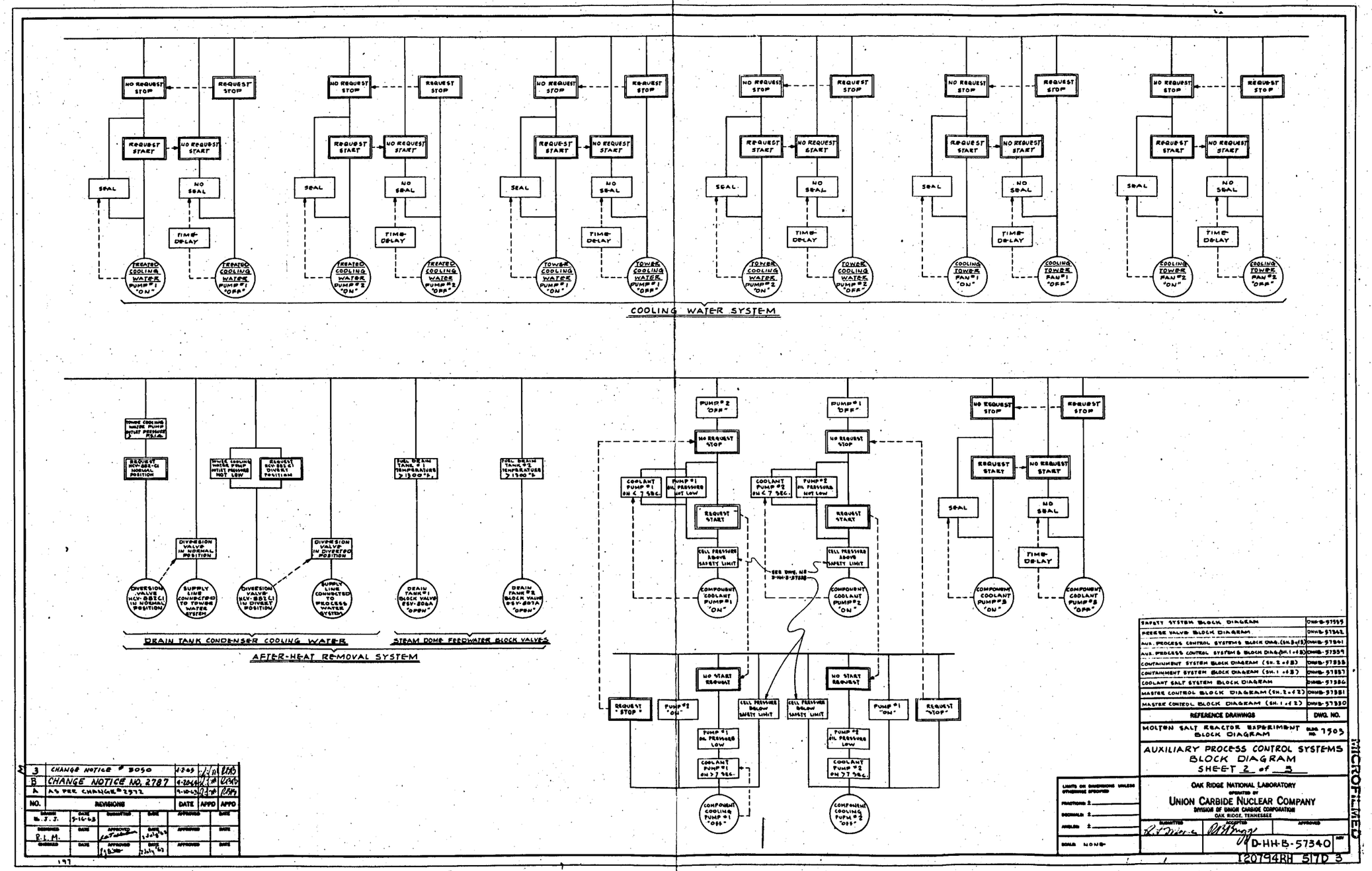


Fig. 4.1.71. Auxiliary process control systems, block diagram, sheet 2 of 3.

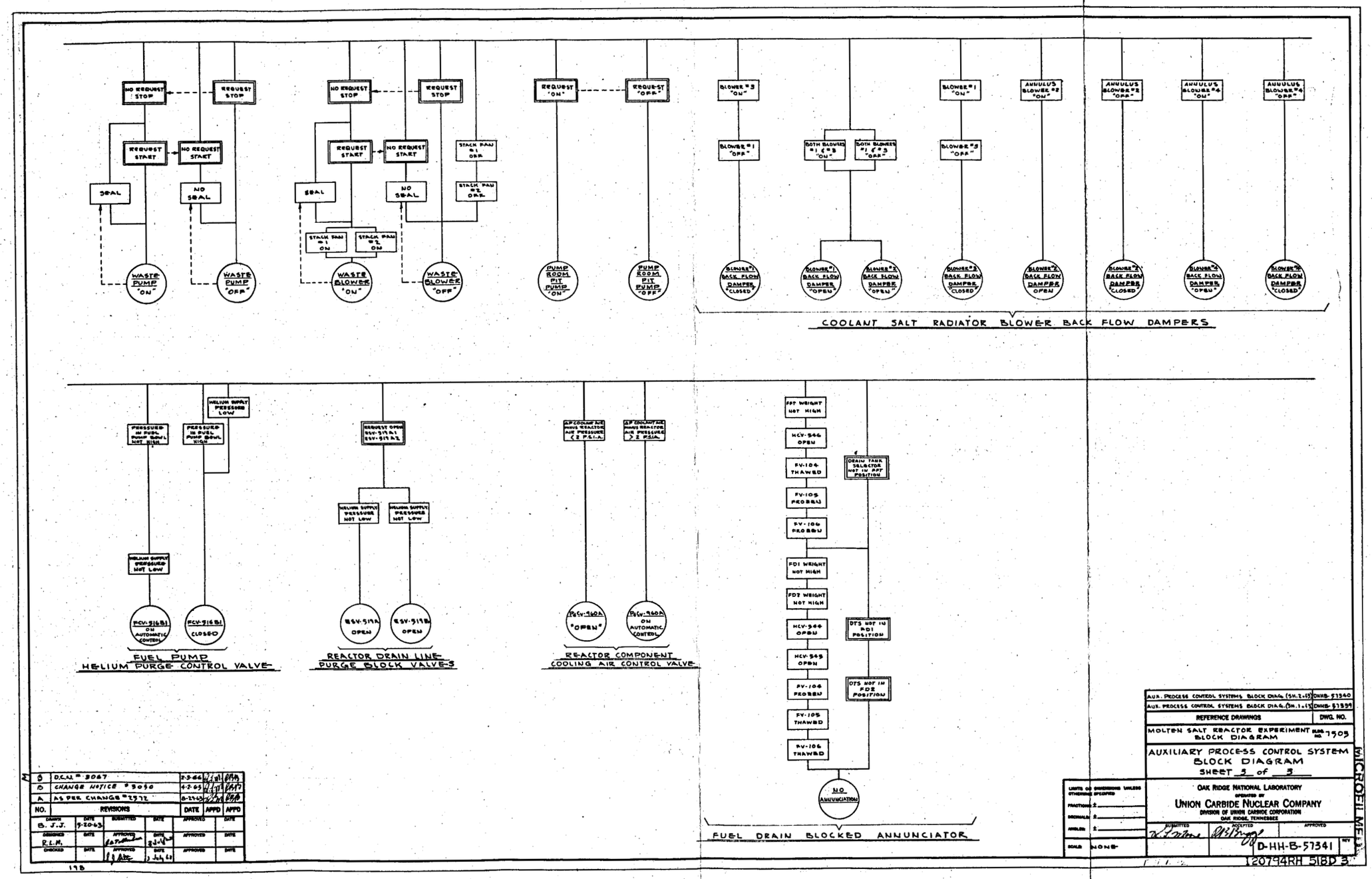


Fig. 4.1.72. Auxiliary process control systems, block diagram, sheet 3 of 3.

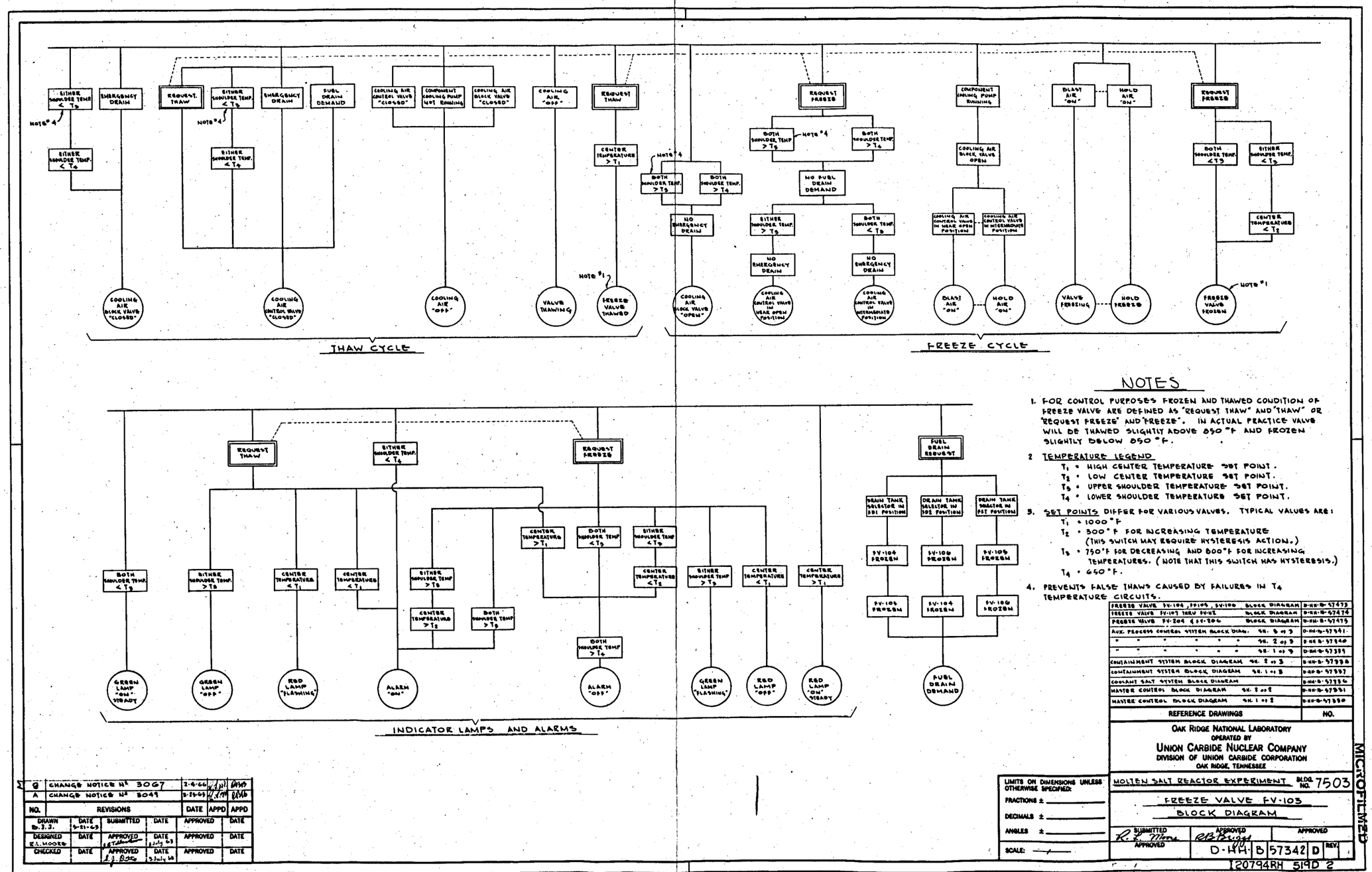


Fig. 4.1.73. Freeze valve FV-103, block diagram.

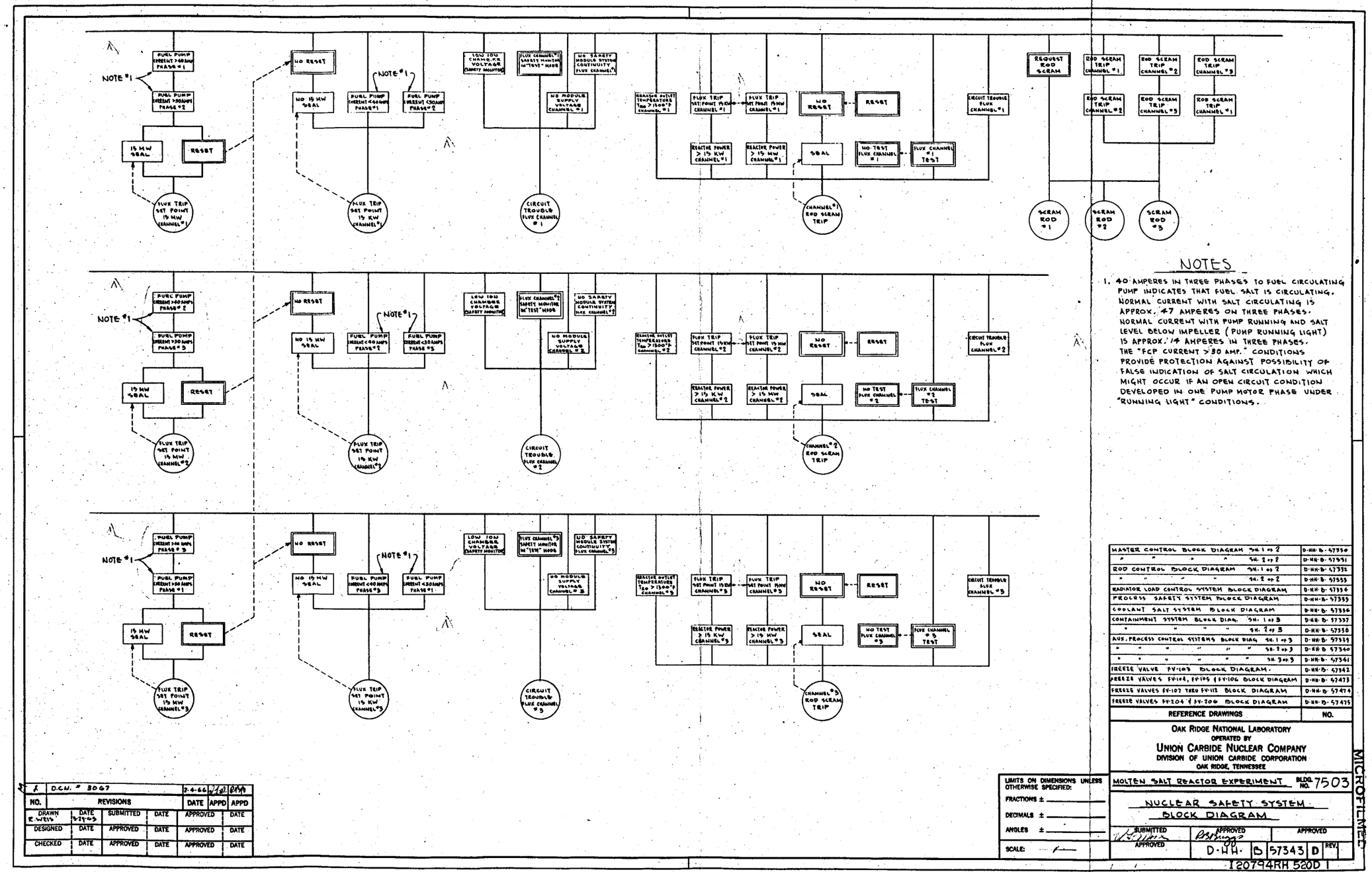


Fig. 4.1.74. Nuclear safety system, block diagram.

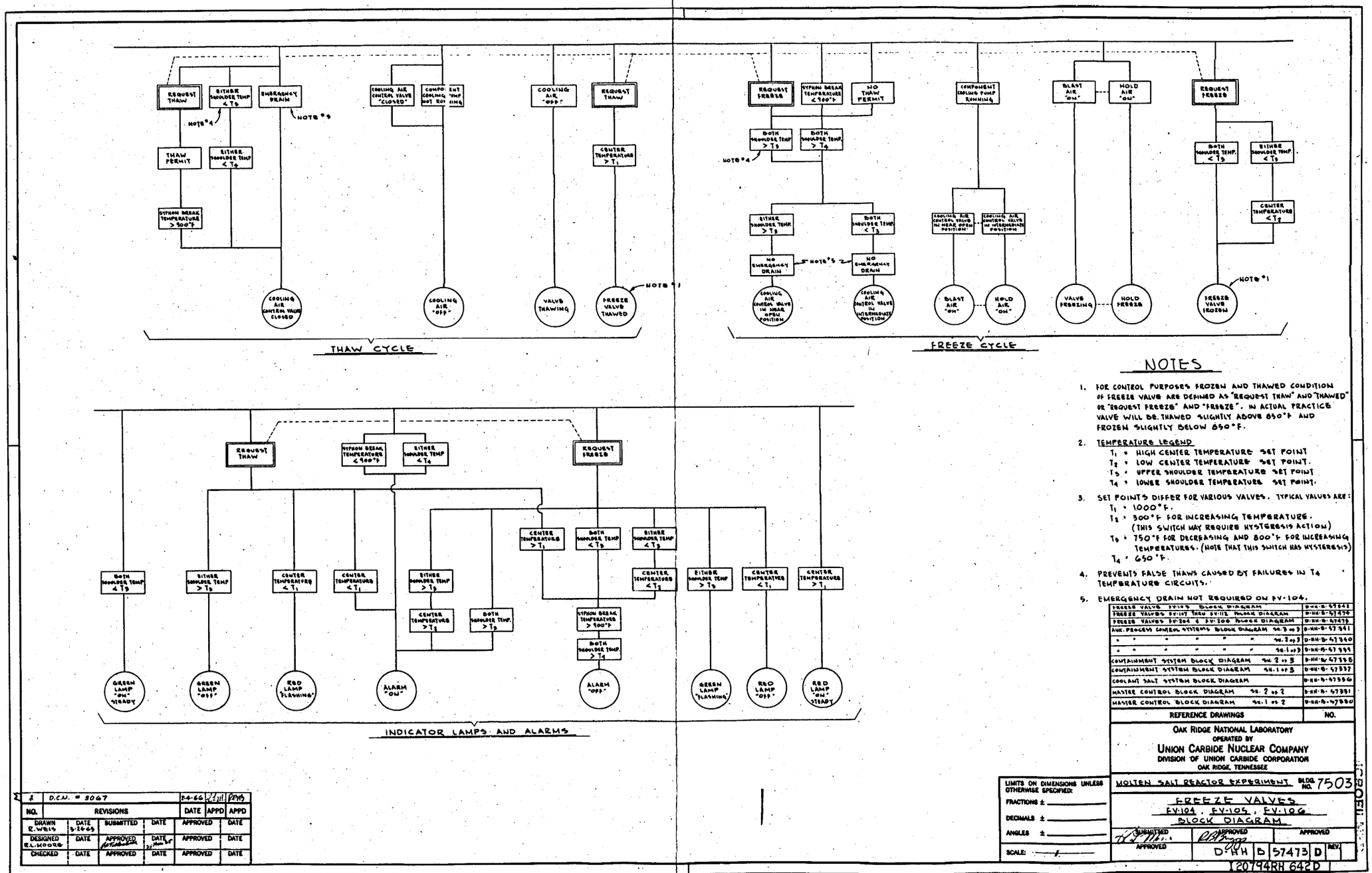


## NOTES

1. FOR CONTROL PURPOSES FROZEN AND THAWED CONDITION OF FREEZE VALVE ARE DEFINED AS "REQUEST THAW" AND "THAWED" OR "REQUEST FREEZE" AND "FREEZE". IN ACTUAL PRACTICE VALVE WILL BE THAWED SLIGHTLY ABOVE 850°F AND FROZEN SLIGHTLY BELOW 850°F.
2. TEMPERATURE LEGEND
   - $T_1$ = HIGH CENTER TEMPERATURE SET POINT
   - $T_2$ = LOW CENTER TEMPERATURE SET POINT.
   - $T_3$ = UPPER SHOULDER TEMPERATURE SET POINT
   - $T_4$ = LOWER SHOULDER TEMPERATURE SET POINT.
3. SET POINTS DIFFER FOR VARIOUS VALVES. TYPICAL VALUES ARE:
   - $T_1$ = 1000°F.
   - $T_2$ = 300°F FOR INCREASING TEMPERATURE. (THIS SWITCH MAY REQUIRE HYSTERESIS ACTION)
   - $T_3$ = 750°F FOR DECREASING AND 800°F FOR INCREASING TEMPERATURES. (NOTE THAT THIS SWITCH HAS HYSTERESIS)
   - $T_4$ = 650°F.
4. PREVENTS FALSE THAWS CAUSED BY FAILURES IN $T_4$ TEMPERATURE CIRCUITS.
5. EMERGENCY DRAIN NOT REQUIRED ON FV-104.

| REFERENCE DRAWINGS | NO. |
|---|---|
| FREEZE VALVE FV-104 BLOCK DIAGRAM | D-HH-B-57542 |
| FREEZE VALVES FV-107 THRU FV-112 BLOCK DIAGRAM | D-HH-B-57479 |
| FREEZE VALVES FV-204 & FV-206 BLOCK DIAGRAM | D-HH-B-57475 |
| AUX. PROCESS CONTROL SYSTEMS BLOCK DIAGRAM SH. 3 of 3 | D-HH-B-57341 |
| " " " " " SH. 2 of 3 | D-HH-B-57340 |
| " " " " " SH. 1 of 3 | D-HH-B-57339 |
| CONTAINMENT SYSTEM BLOCK DIAGRAM SH. 2 of 3 | D-HH-B-57338 |
| CONTAINMENT SYSTEM BLOCK DIAGRAM SH. 1 of 3 | D-HH-B-57337 |
| COOLANT SALT SYSTEM BLOCK DIAGRAM | D-HH-B-57336 |
| MASTER CONTROL BLOCK DIAGRAM SH. 2 of 2 | D-HH-B-57331 |
| MASTER CONTROL BLOCK DIAGRAM SH. 1 of 2 | D-HH-B-57330 |

OAK RIDGE NATIONAL LABORATORY
OPERATED BY
UNION CARBIDE NUCLEAR COMPANY
DIVISION OF UNION CARBIDE CORPORATION
OAK RIDGE, TENNESSEE

MOLTEN SALT REACTOR EXPERIMENT BLDG. NO. 7503

FREEZE VALVES
FV-104, FV-105, FV-106
BLOCK DIAGRAM

SUBMITTED | APPROVED | APPROVED | APPROVED

D-HH B 57473 D REV.

LIMITS ON DIMENSIONS UNLESS OTHERWISE SPECIFIED:
FRACTIONS ±
DECIMALS ±
ANGLES ±
SCALE: —/—

| NO. | REVISIONS | | | | DATE | APPD | APPD |
|---|---|---|---|---|---|---|---|
| A | D.C.N. # 3067 | | | | 2-4-66 | | |

| DRAWN R. WEIS | DATE 5-24-65 | SUBMITTED | DATE | APPROVED | DATE |
|---|---|---|---|---|---|
| DESIGNED R.L. MOORE | DATE | APPROVED | DATE | APPROVED | DATE |
| CHECKED | DATE | APPROVED | DATE | APPROVED | DATE |

120794RH 642D

Fig. 4.1.75. Freeze valves FV-104, FV-105, FV-106, block diagram.

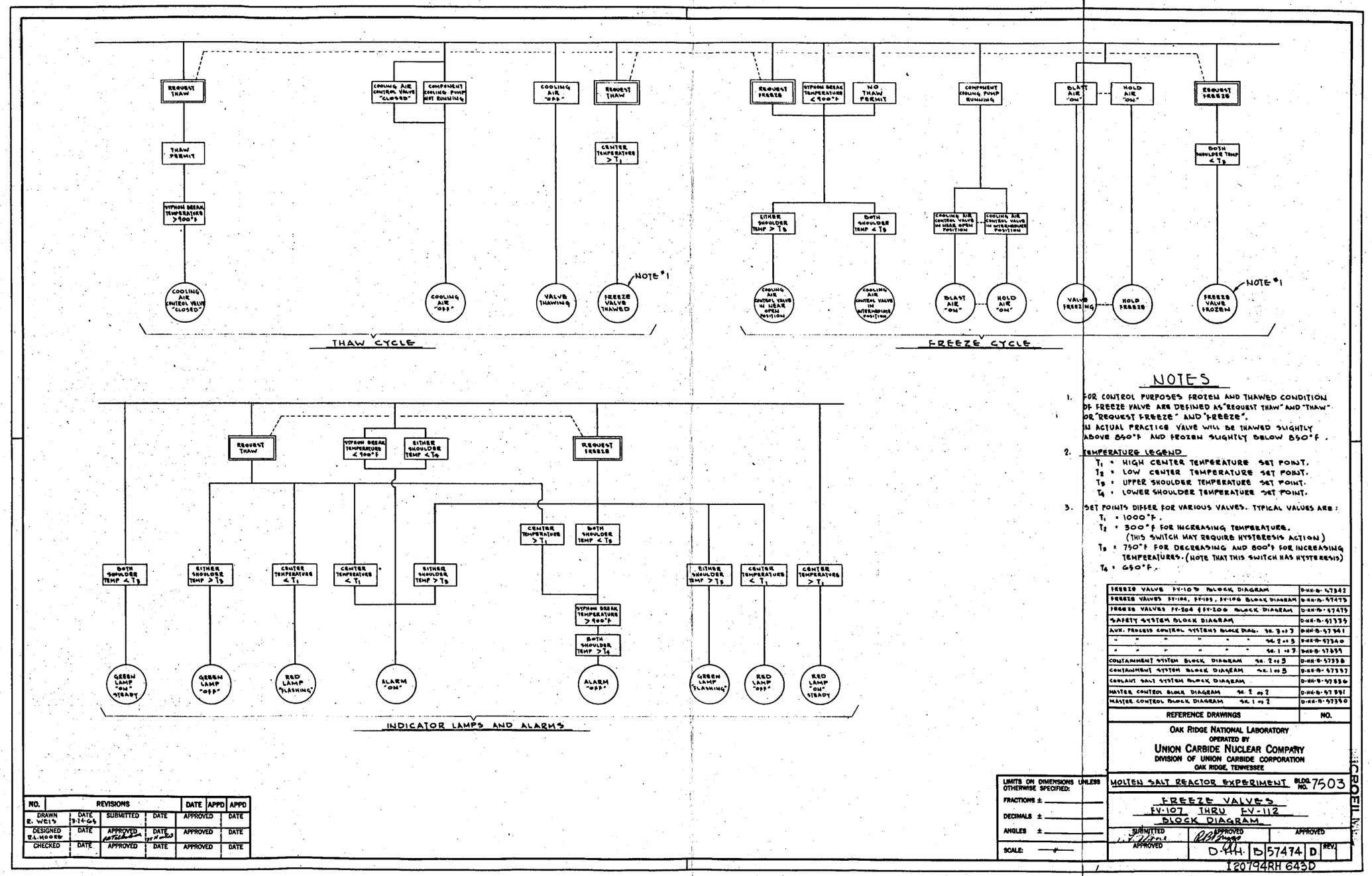


Fig. 4.1.76. Freeze valves FV-107 through FV-112, block diagram.

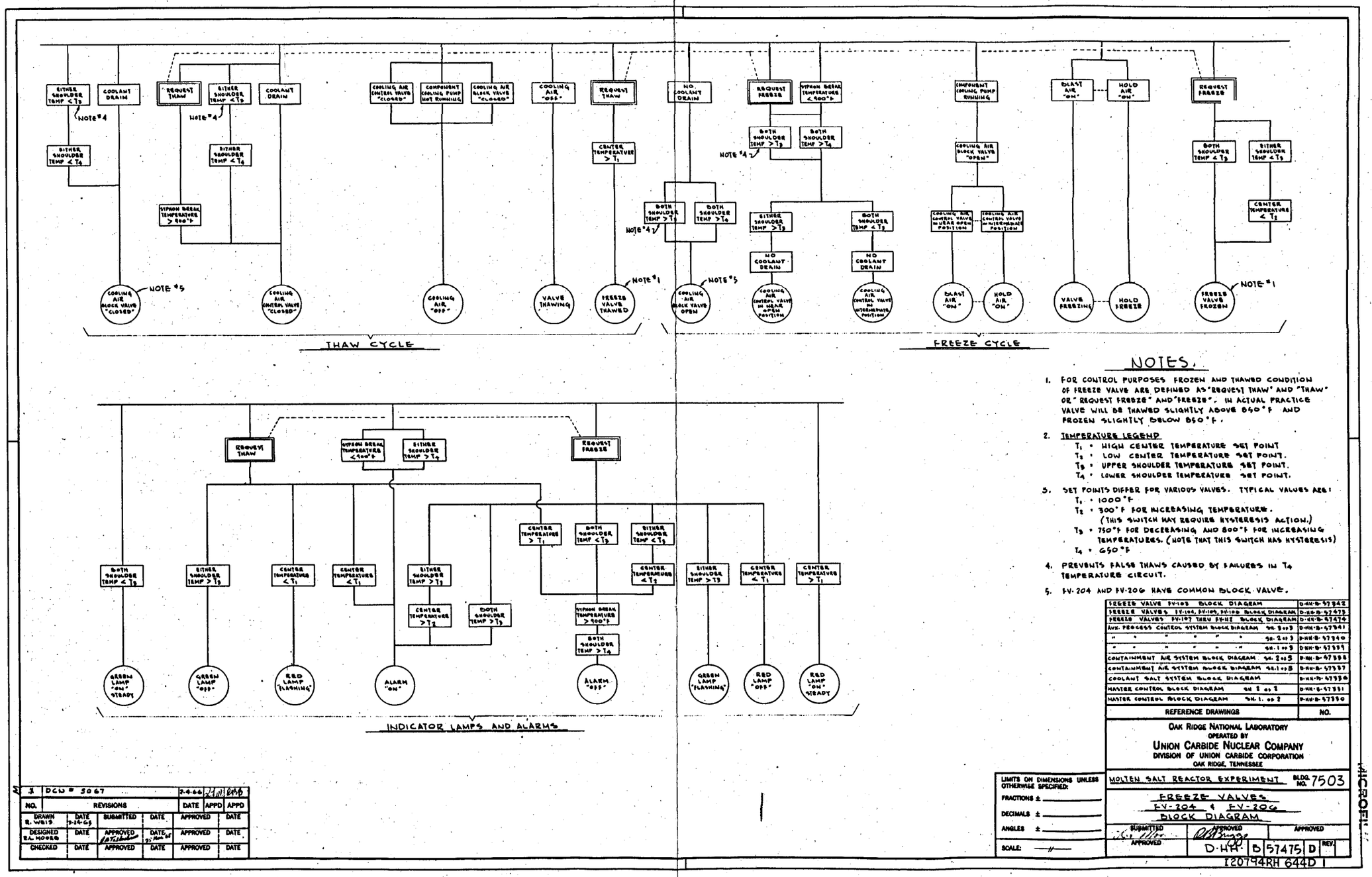


Fig. 4.1.77. Freeze valves FV-204 and FV-206, block diagram.

ORNL DWG. 72-5560

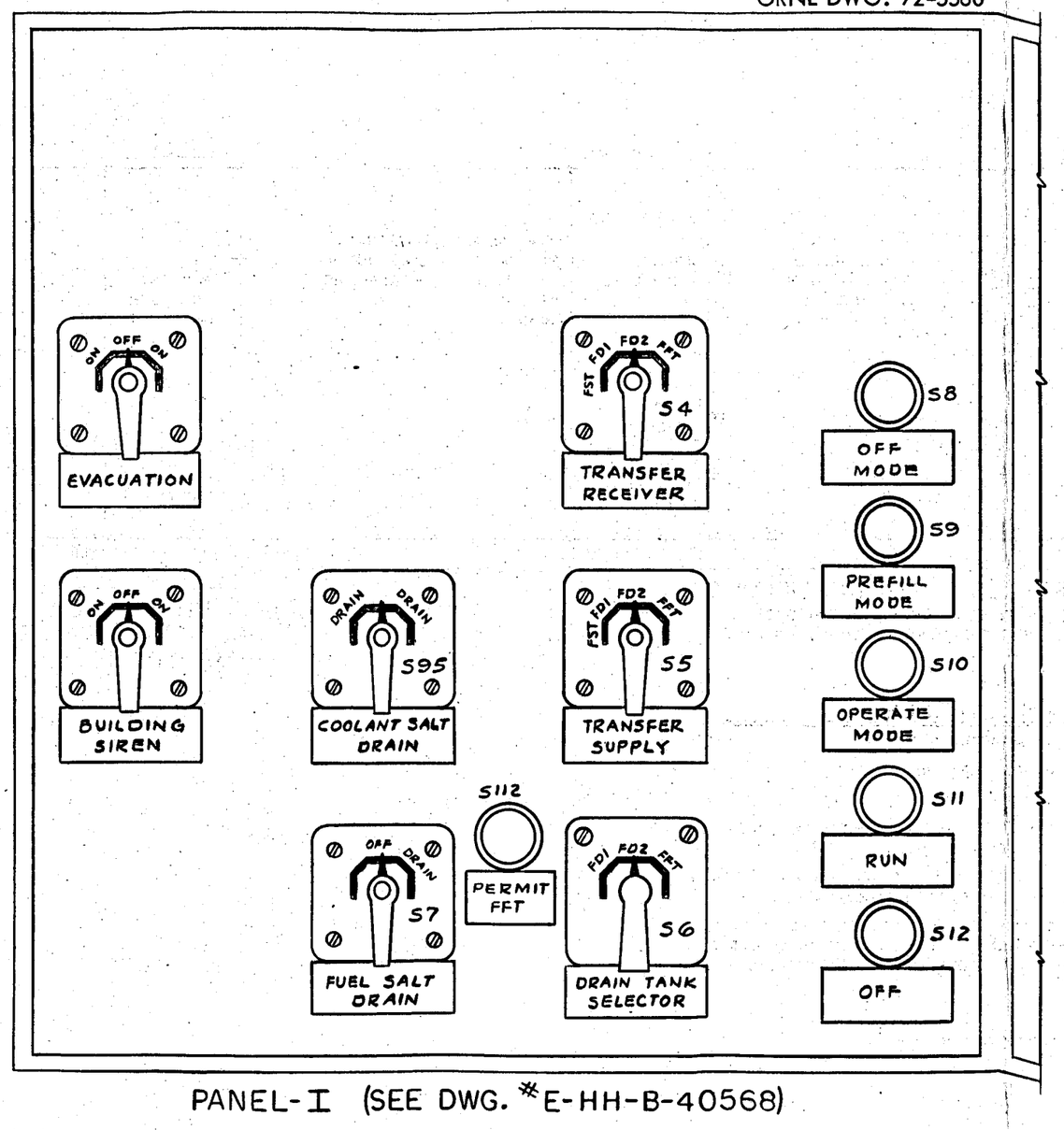


Fig. 4.2.1.1. Operational mode and drain tank selector switches on the console in the main control room.

ORNL DWG. 72-5561

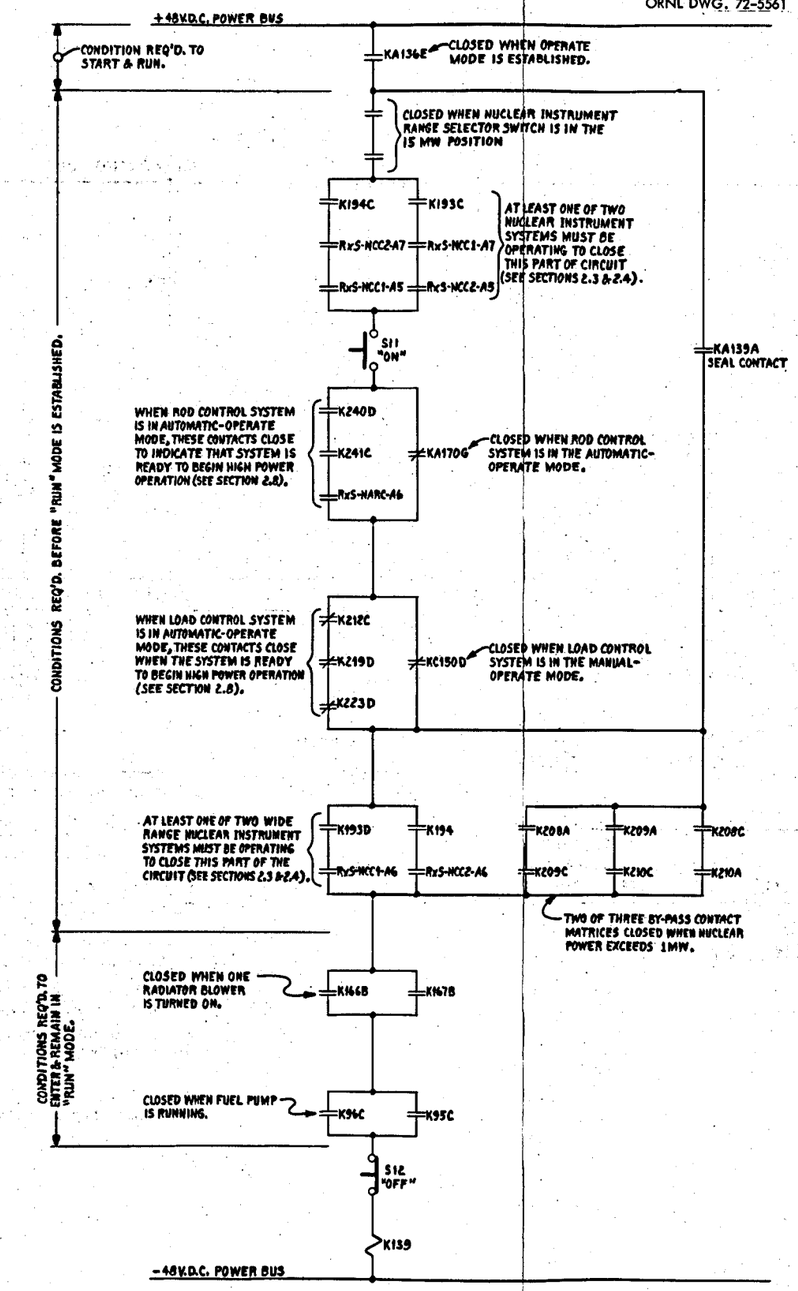


Fig. 4.2.1.2. Simplified diagram of "run" mode selector circuit.

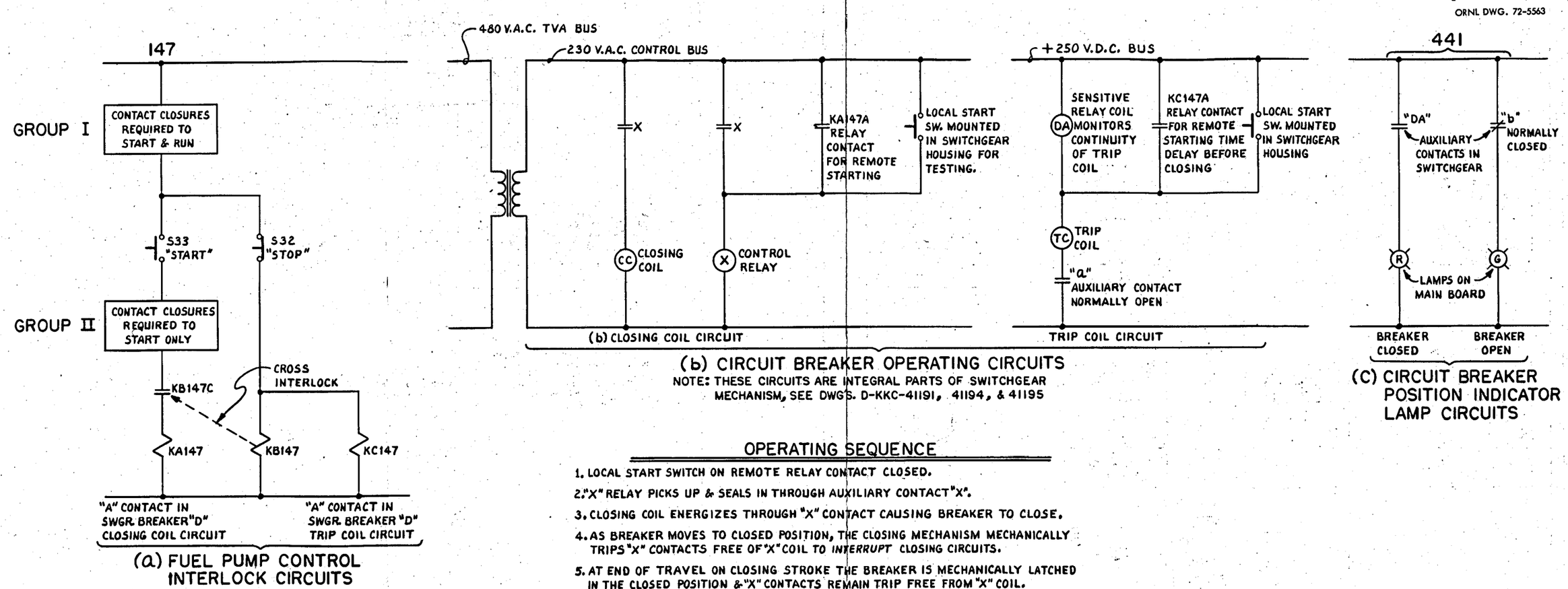


## OPERATING SEQUENCE

1. LOCAL START SWITCH ON REMOTE RELAY CONTACT CLOSED.
2. "X" RELAY PICKS UP & SEALS IN THROUGH AUXILIARY CONTACT "X".
3. CLOSING COIL ENERGIZES THROUGH "X" CONTACT CAUSING BREAKER TO CLOSE.
4. AS BREAKER MOVES TO CLOSED POSITION, THE CLOSING MECHANISM MECHANICALLY TRIPS "X" CONTACTS FREE OF "X" COIL TO INTERRUPT CLOSING CIRCUITS.
5. AT END OF TRAVEL ON CLOSING STROKE THE BREAKER IS MECHANICALLY LATCHED IN THE CLOSED POSITION & "X" CONTACTS REMAIN TRIP FREE FROM "X" COIL.
6. THE BREAKER IS CLOSED AGAINST THE COMPRESSIVE FORCE OF A POWERFUL SPRING. WHEN THE TRIP COIL IS ENERGIZED THE LATCHING MECHANISM IS RELEASED & THE BREAKER IS QUICKLY OPENED BY THE FORCE OF THE SPRING. THE "X" CONTACTS RESET PROVIDED THE "X" COIL IS DEENERGIZED.

Fig. 4.2.2.1. Typical control circuits for motor starting circuit breakers.

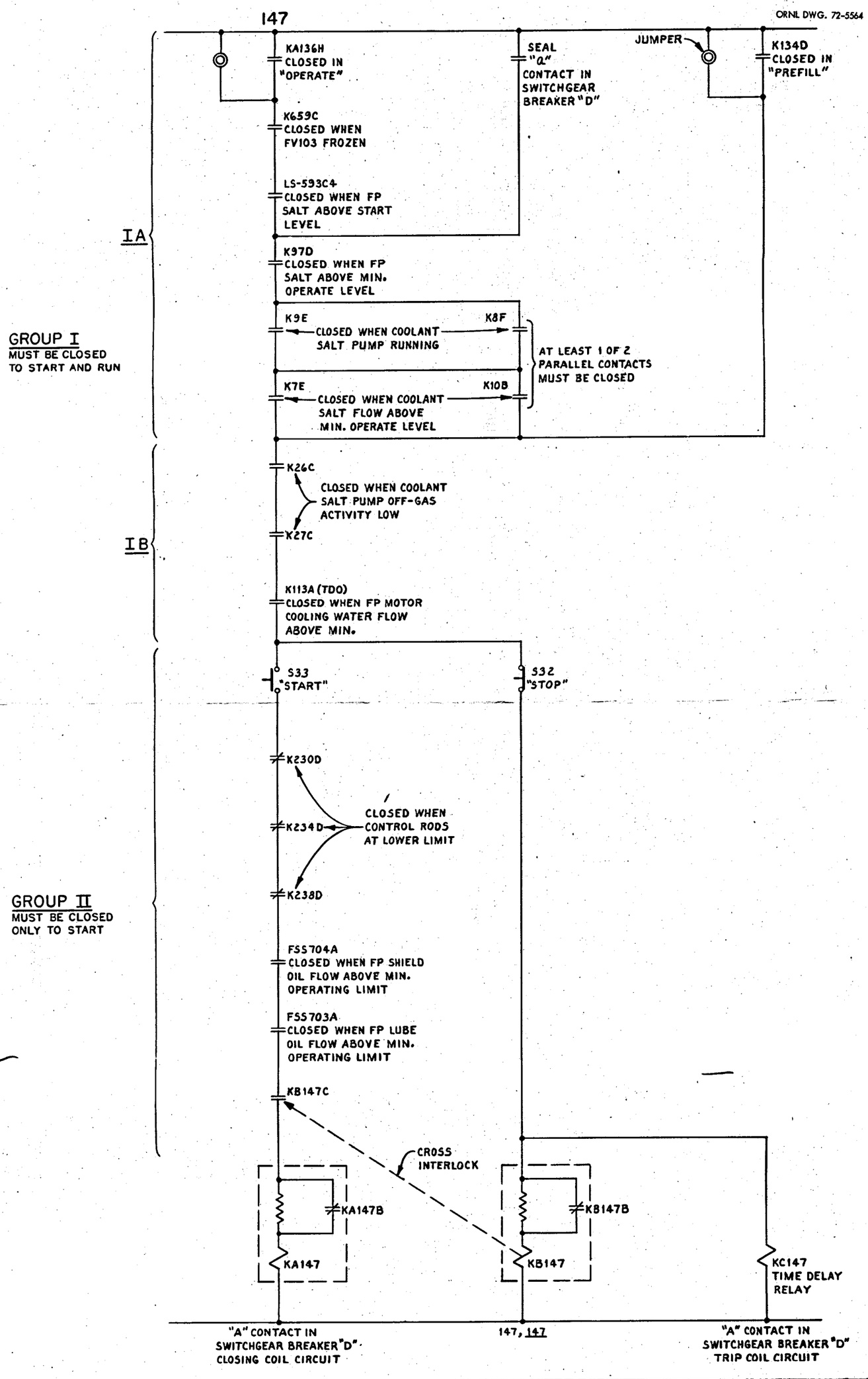
147
ORNL DWG. 72-5564
KA136H
CLOSED IN
"OPERATE"
SEAL
"a"
CONTACT IN
SWITCHGEAR
BREAKER "D"
JUMPER
K134D
CLOSED IN
"PREFILL"
K659C
CLOSED WHEN
FV103 FROZEN
LS-593C4
CLOSED WHEN FP
SALT ABOVE START
LEVEL
IA
K97D
CLOSED WHEN FP
SALT ABOVE MIN.
OPERATE LEVEL
K9E
K8F
CLOSED WHEN COOLANT
SALT PUMP RUNNING
AT LEAST 1 OF 2
PARALLEL CONTACTS
MUST BE CLOSED
K7E
K10B
CLOSED WHEN COOLANT
SALT FLOW ABOVE
MIN. OPERATE LEVEL
GROUP I
MUST BE CLOSED
TO START AND RUN
K26C
CLOSED WHEN COOLANT
SALT PUMP OFF-GAS
ACTIVITY LOW
K27C
IB
K113A (TDO)
CLOSED WHEN FP MOTOR
COOLING WATER FLOW
ABOVE MIN.
S33
"START"
S32
"STOP"
K230D
K234D
CLOSED WHEN
CONTROL RODS
AT LOWER LIMIT
K238D
GROUP II
MUST BE CLOSED
ONLY TO START
FSS704A
CLOSED WHEN FP SHIELD
OIL FLOW ABOVE MIN.
OPERATING LIMIT
FSS703A
CLOSED WHEN FP LUBE
OIL FLOW ABOVE MIN.
OPERATING LIMIT
KB147C
CROSS
INTERLOCK
KA147B
KB147B
KA147
KB147
KC147
TIME DELAY
RELAY
"A" CONTACT IN
SWITCHGEAR BREAKER "D"
CLOSING COIL CIRCUIT
147, 147
"A" CONTACT IN
SWITCHGEAR BREAKER "D"
TRIP COIL CIRCUIT

Fig. 4.2.2.2. Fuel salt pump control circuit.

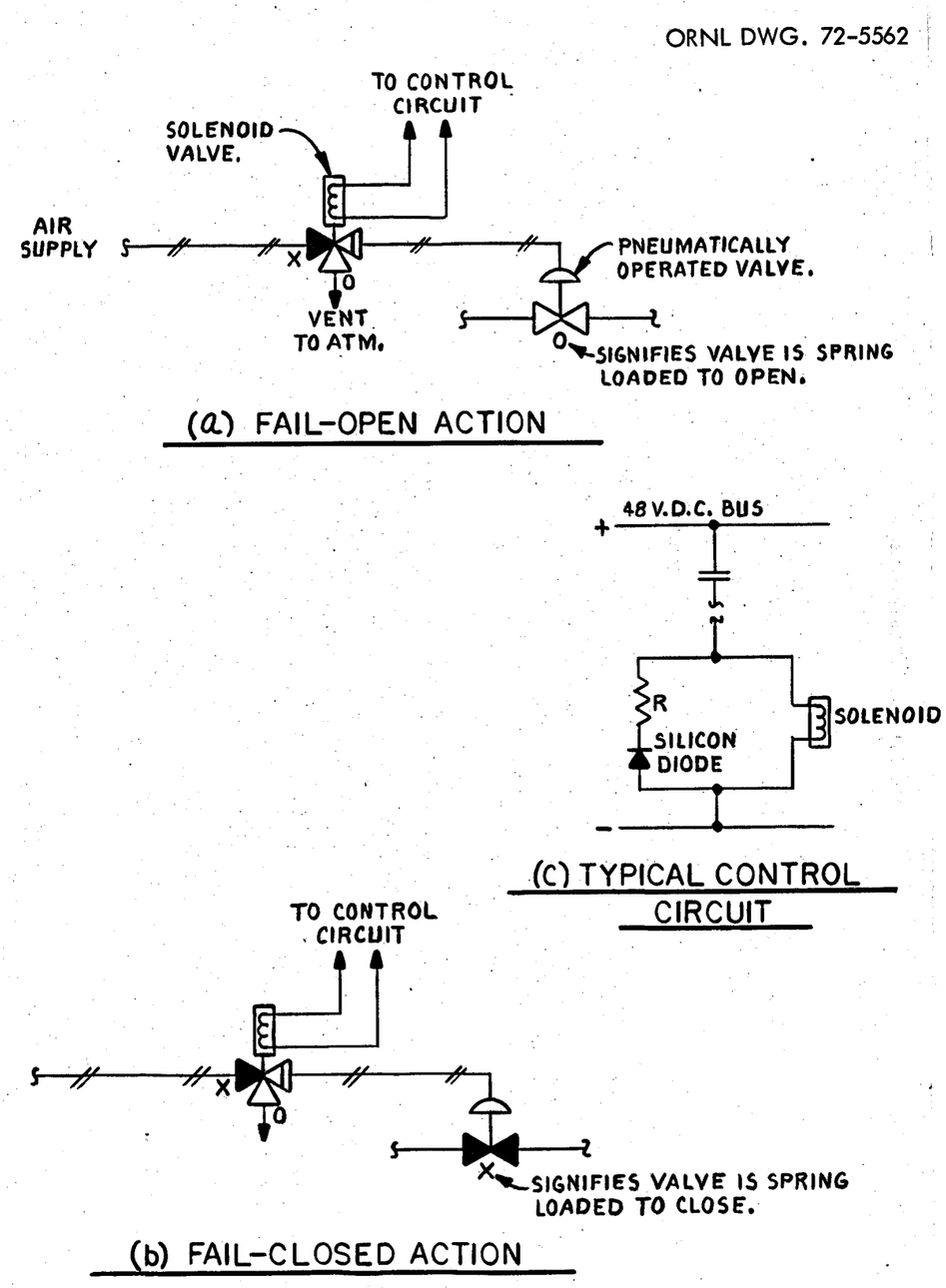


Fig. 4.2.4.1. Typical air supply for pneumatically operated control valves.

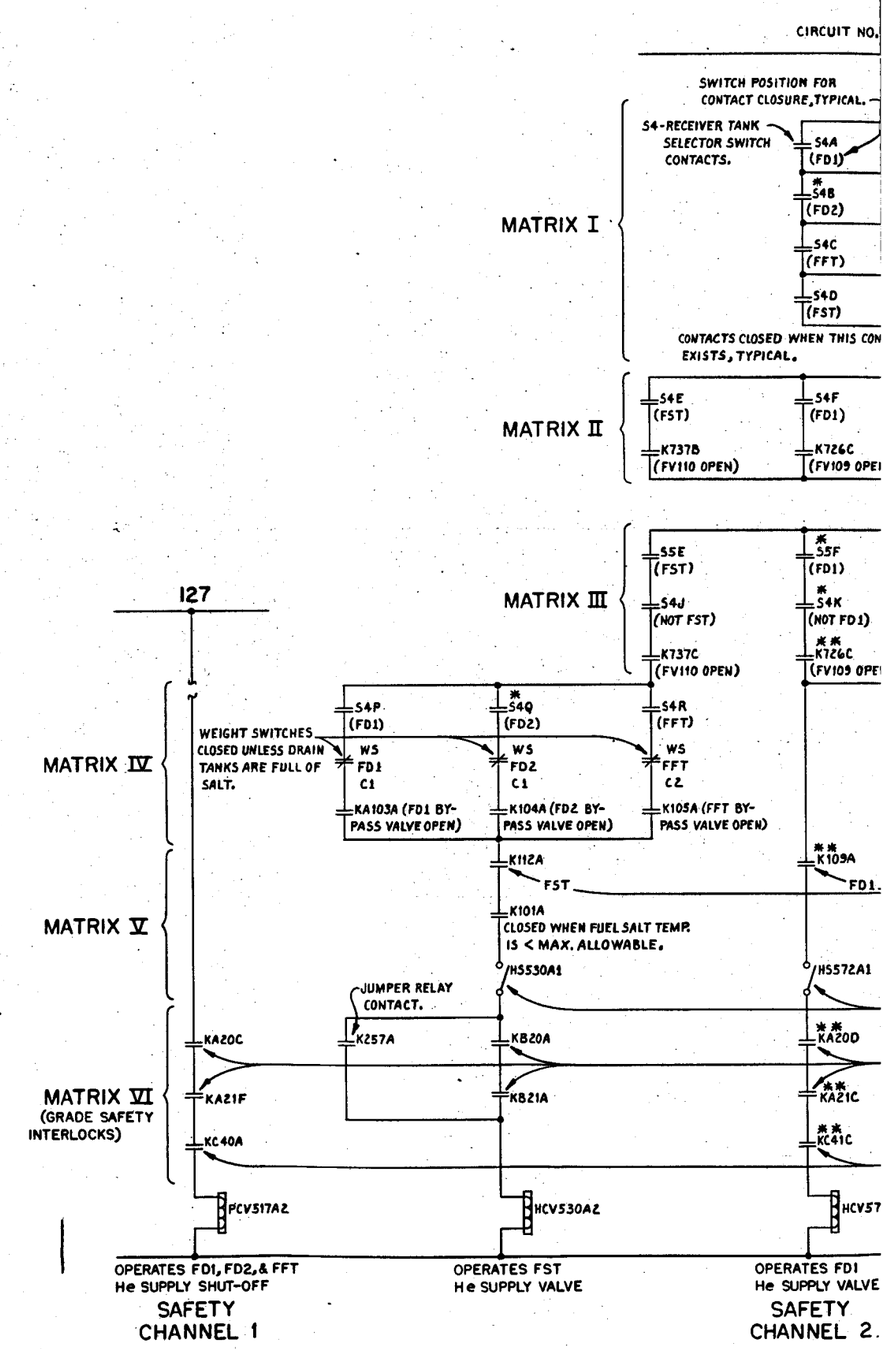


Fig. 4.2.4.2. Con

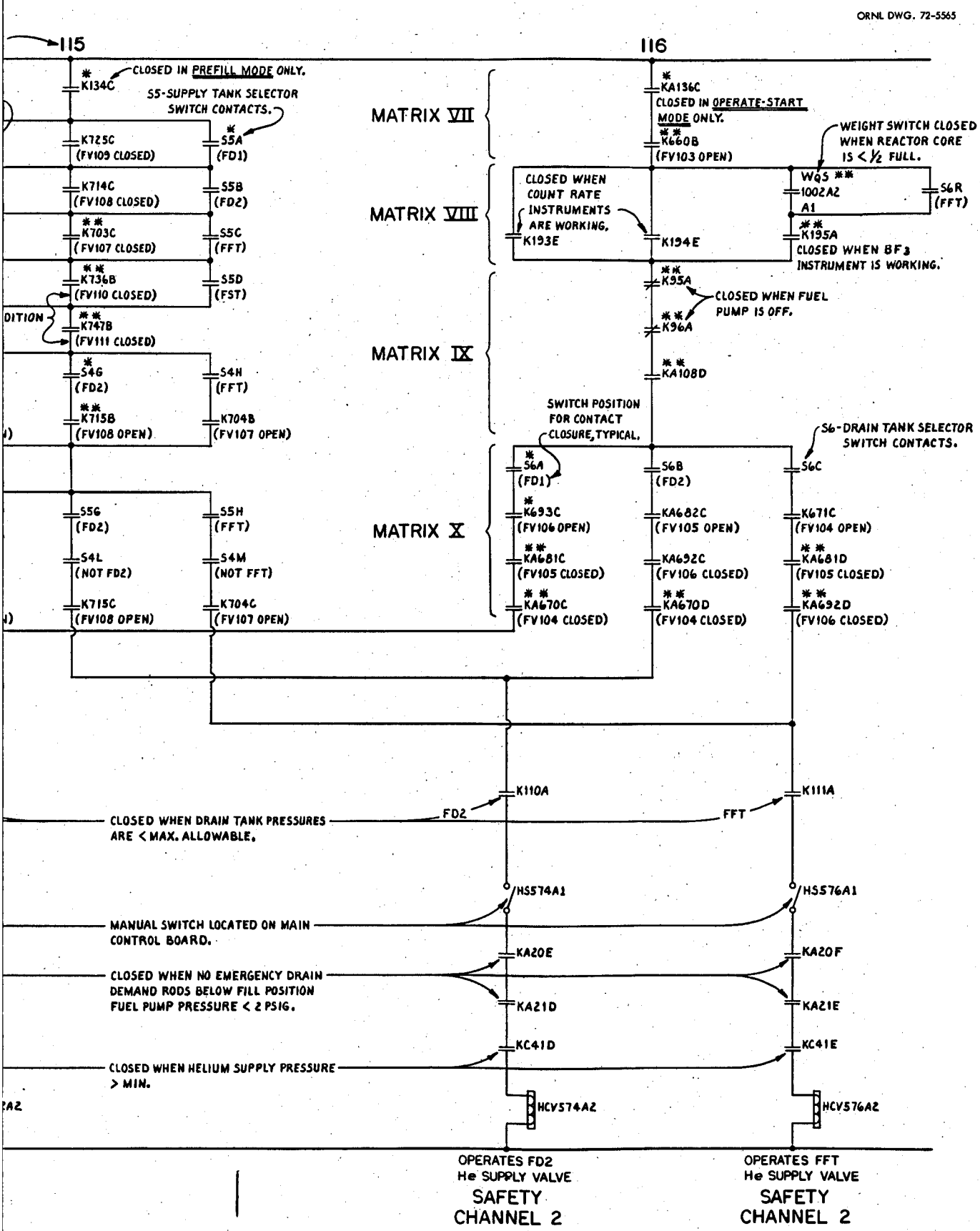


rol circuits for drain tanks: helium supply valves.

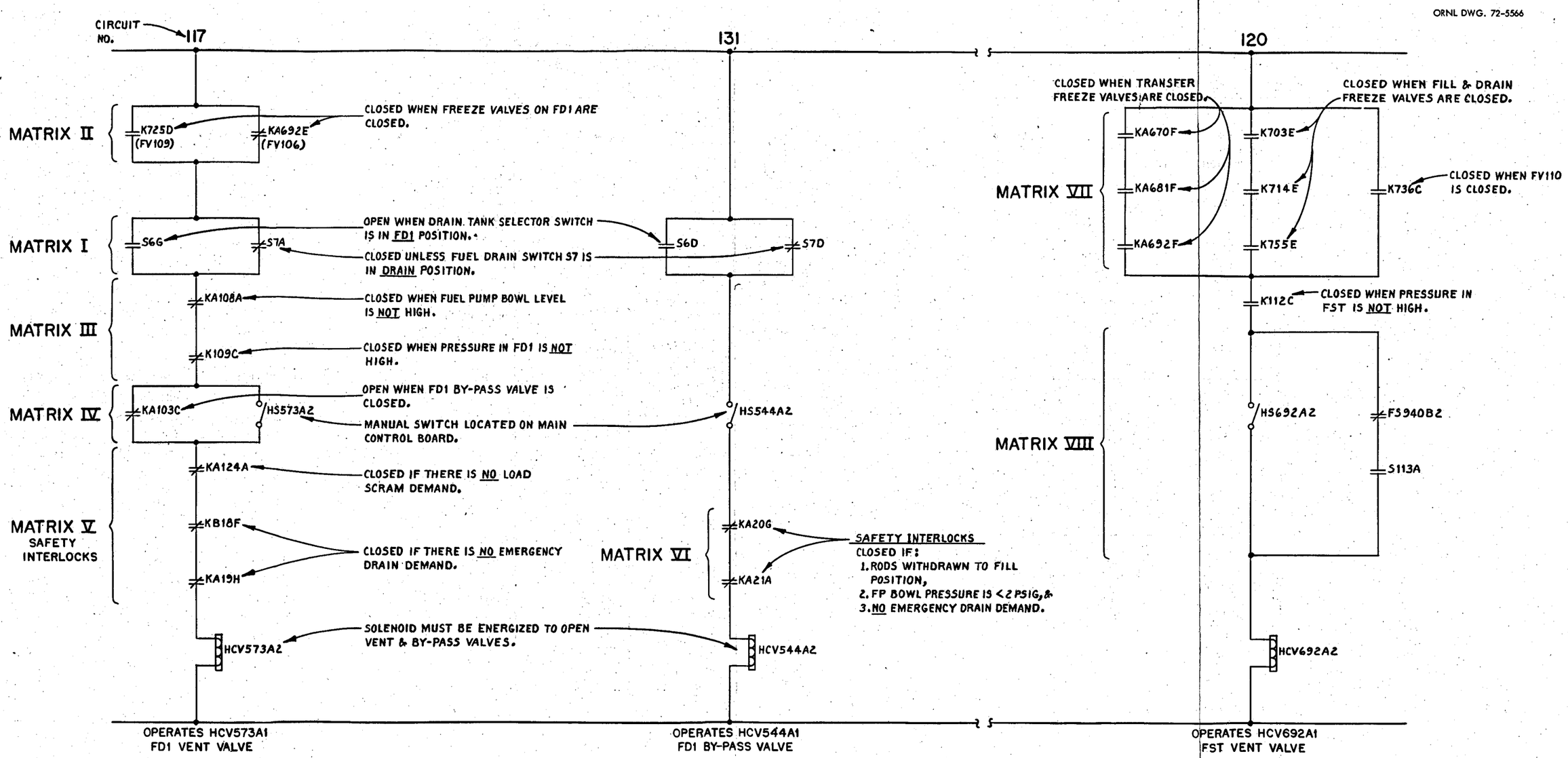


Fig. 4.2.4.3. Typical control circuits for drain tanks: vent and bypass valves.

ORNL DWG. 72-5567

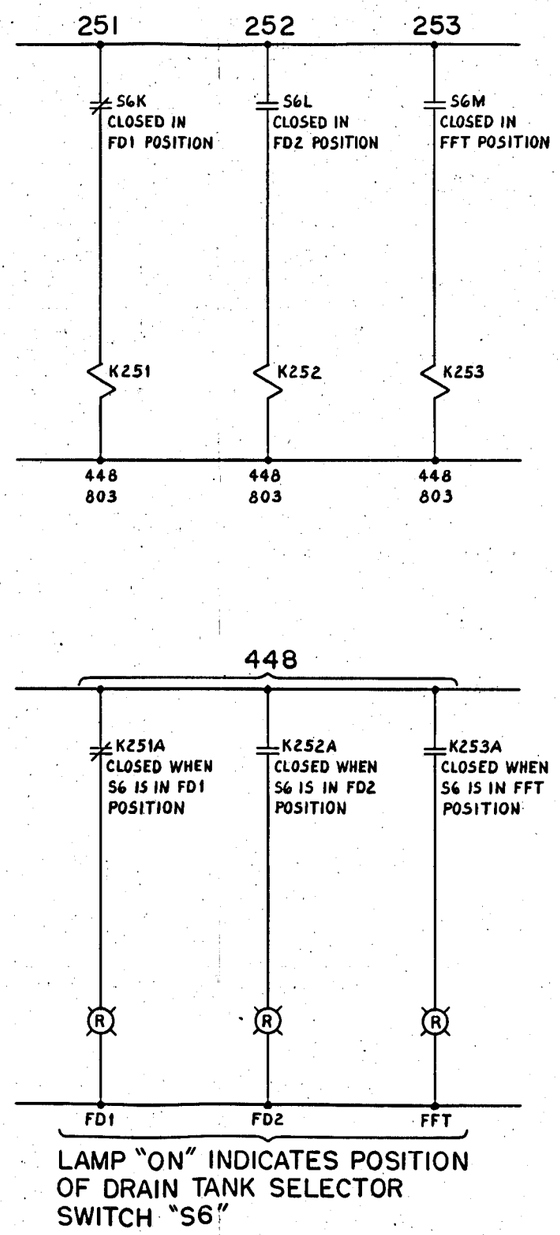


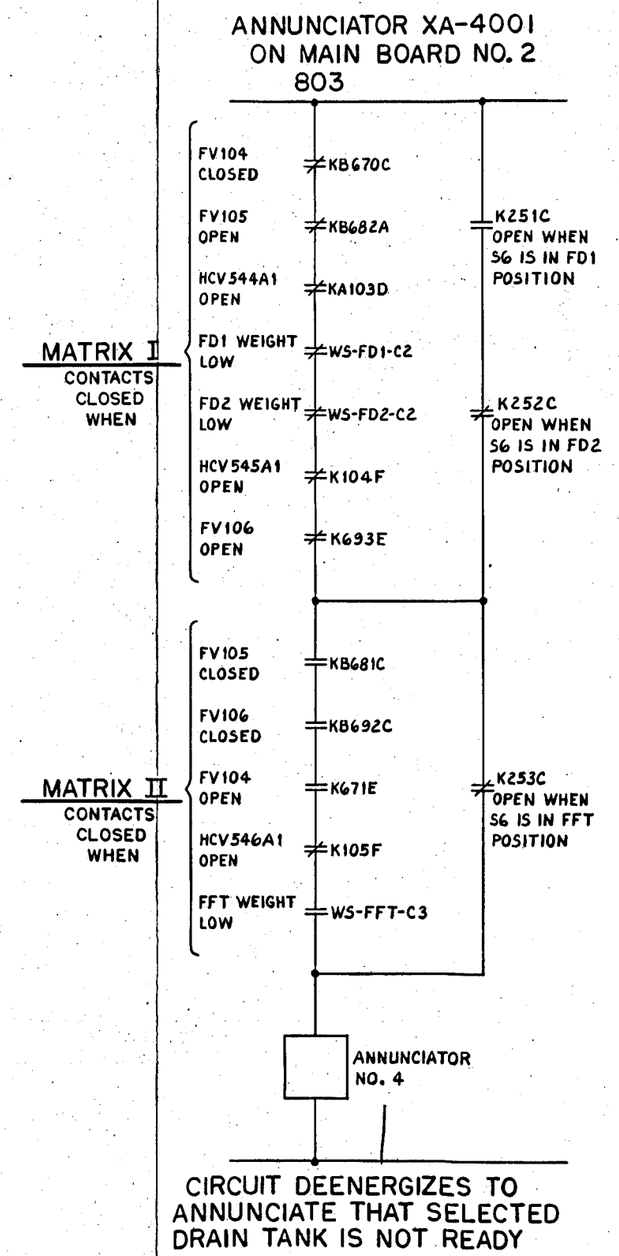


**NOTE:** CIRCUITS INDICATE CONDITIONS AS FOLLOWS:

1. S6 IN FD1 POSITION,
2. LAMP IN FD1 GRAPHIC SYMBOL "ON," &
3. ANNUNCIATOR IS "OFF" INDICATING THAT FD1 IS READY TO RECEIVE A DRAIN.

Fig. 4.2.4.4. Selected drain tank annunciator control circuit.

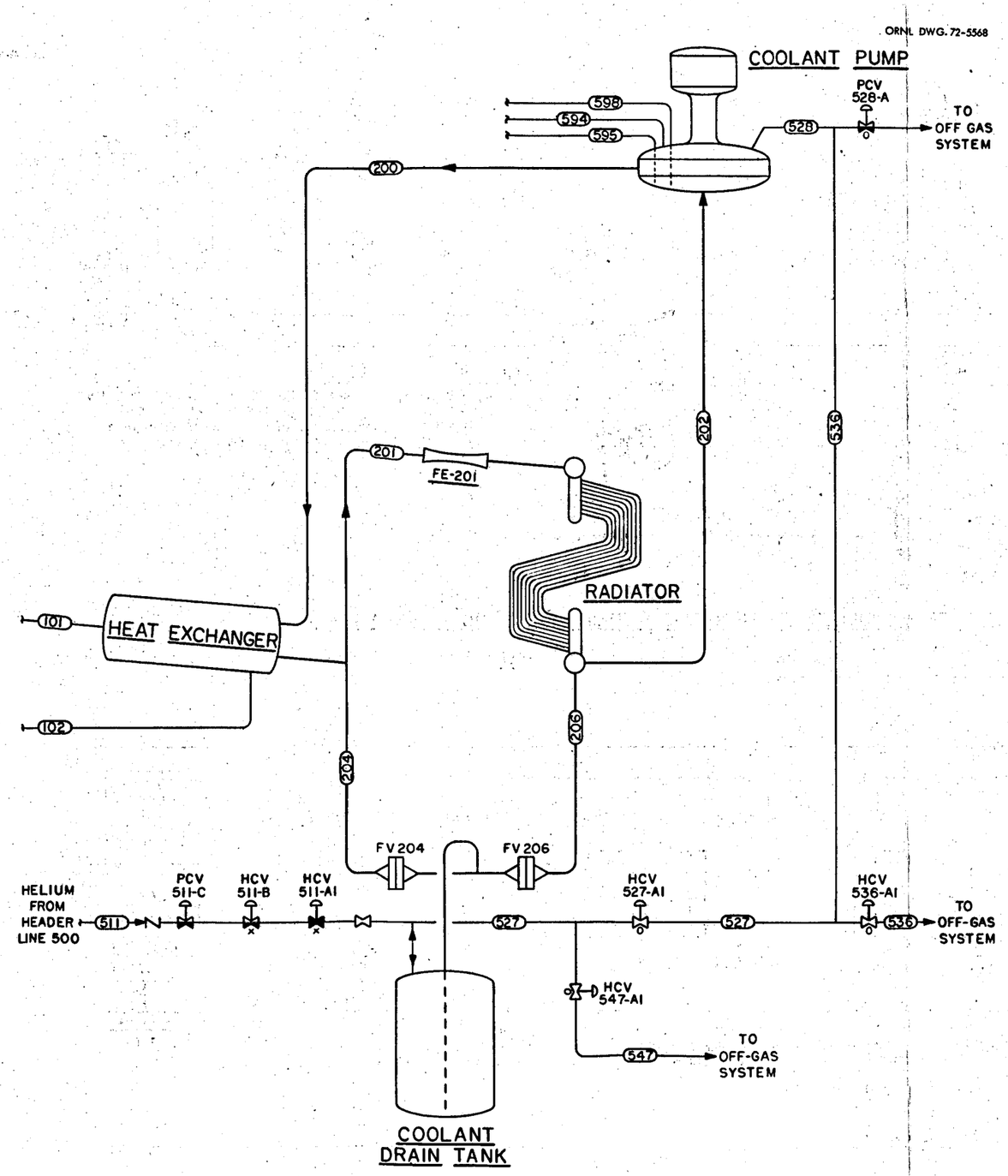


Fig. 4.2.8.1. Diagram of coolant salt loop fill and drain system.

ORNL DWG. 72-5569

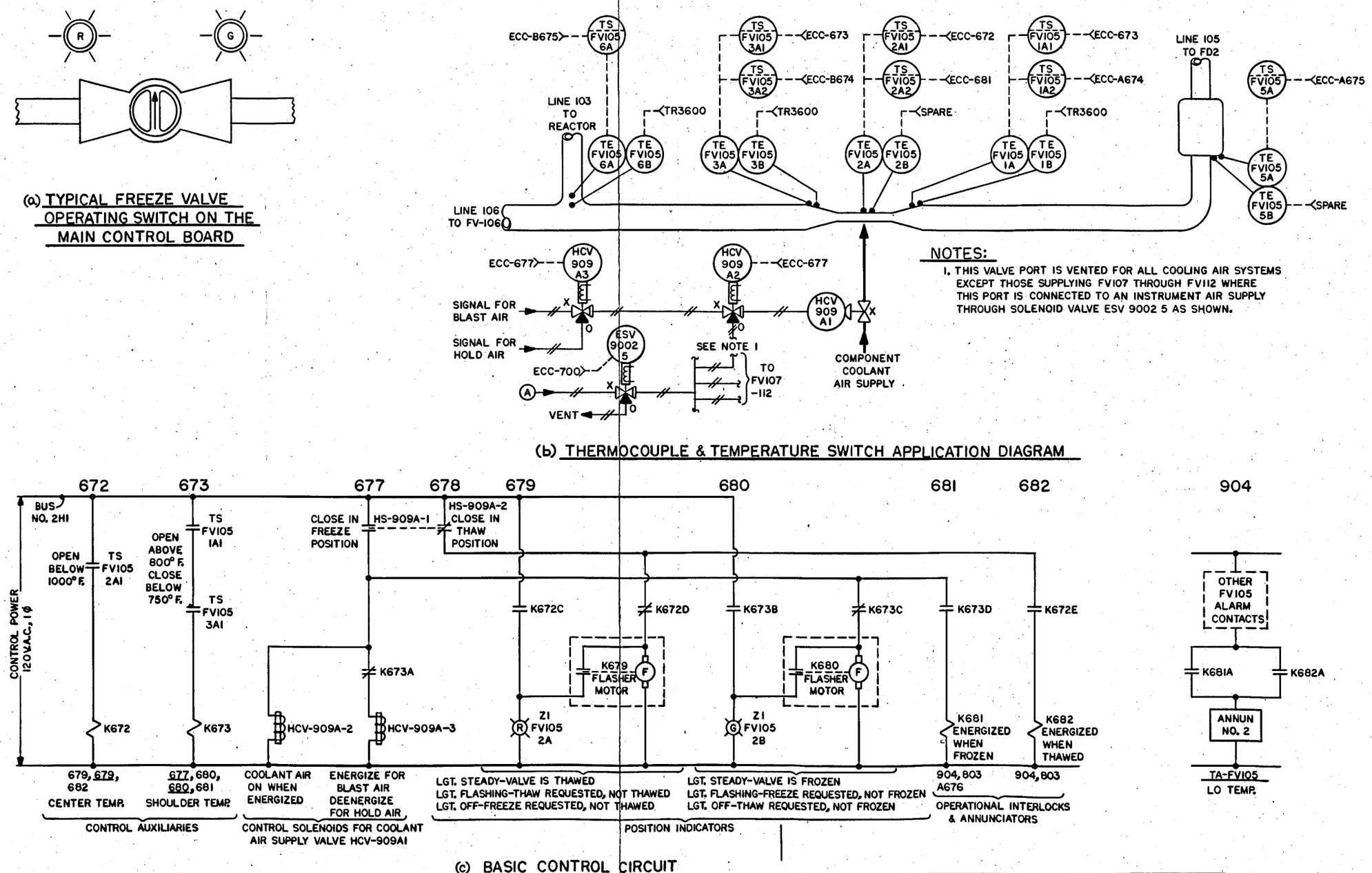


Fig. 4.3.1. Freeze valve control.

ORNL DWG. 72-5570

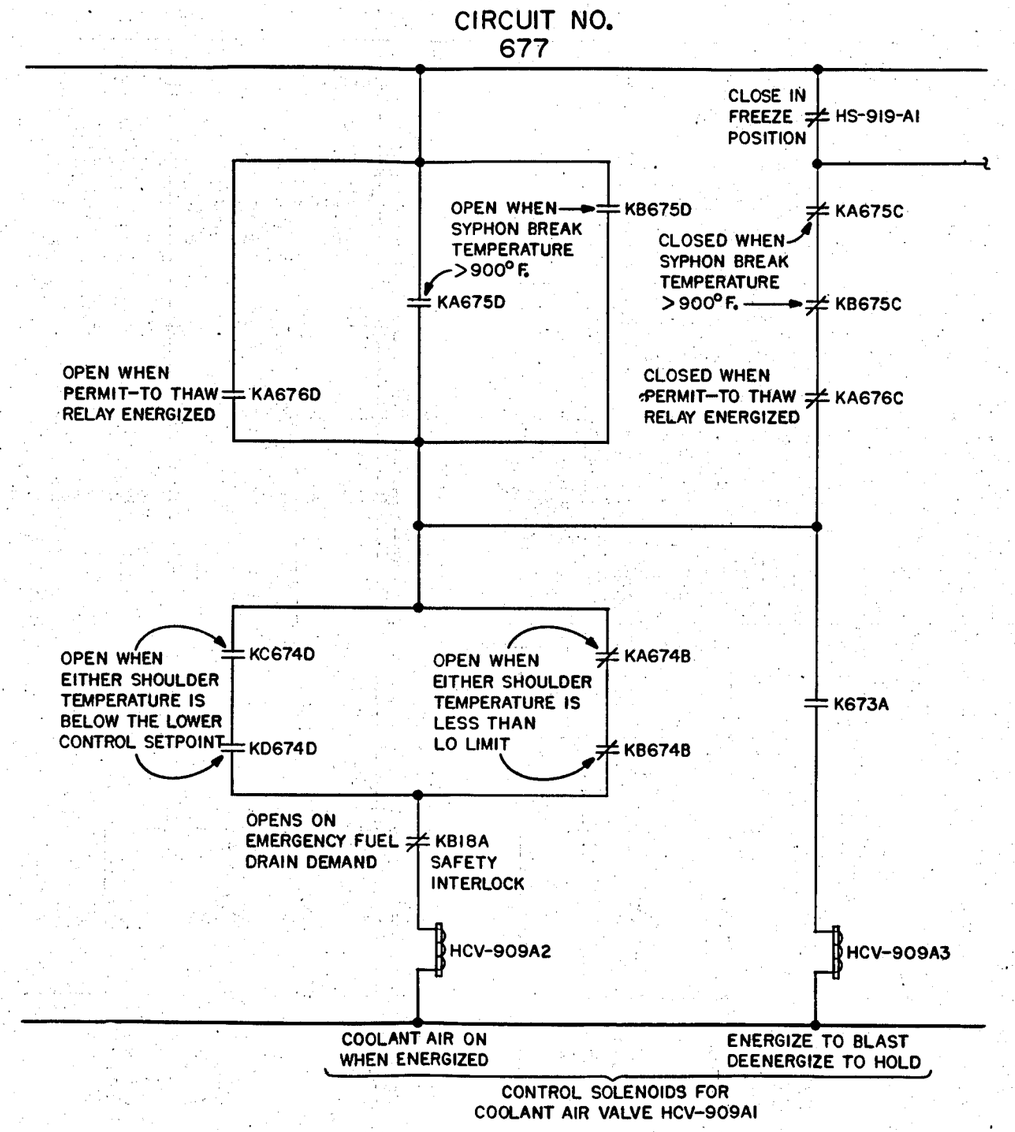


Fig. 4.3.2. Control circuit for freeze valve cooling air supply system.

ORNL DWG. 72-5571

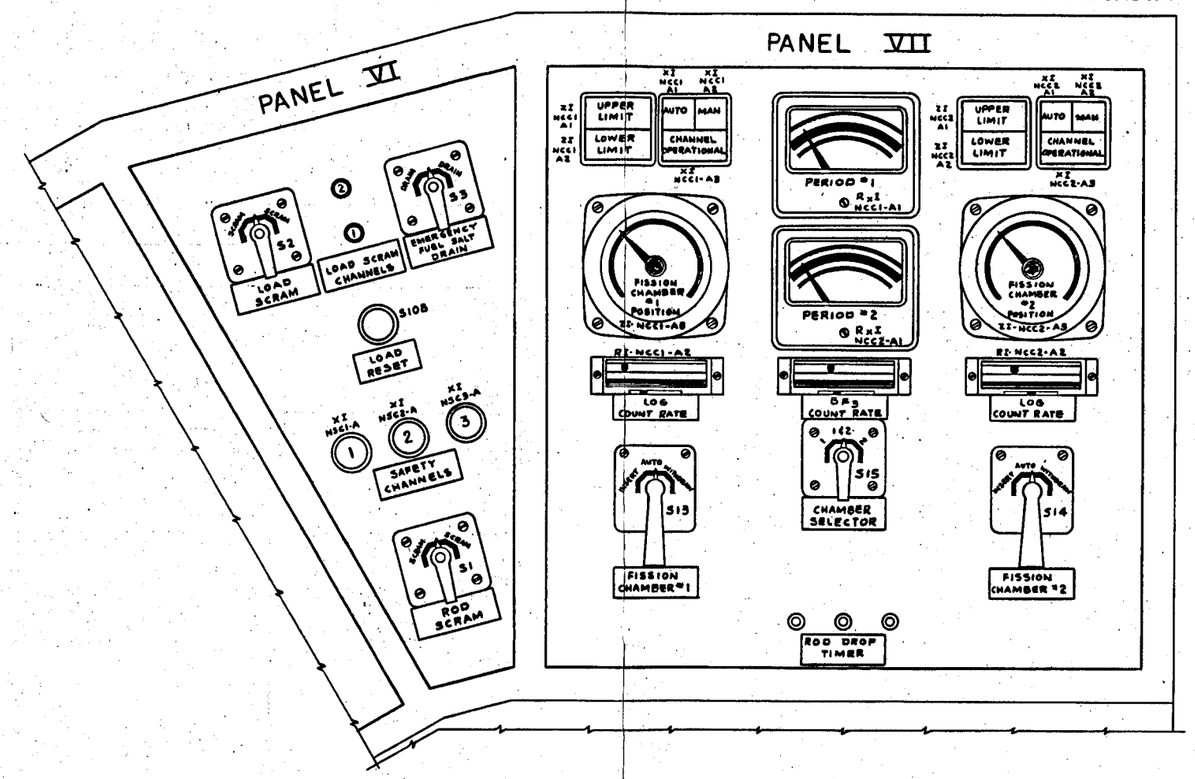


Fig. 4.7.2.1. Emergency and fission chamber drive switches in operator's console in main control room.

ORNL DWG. 72-5572

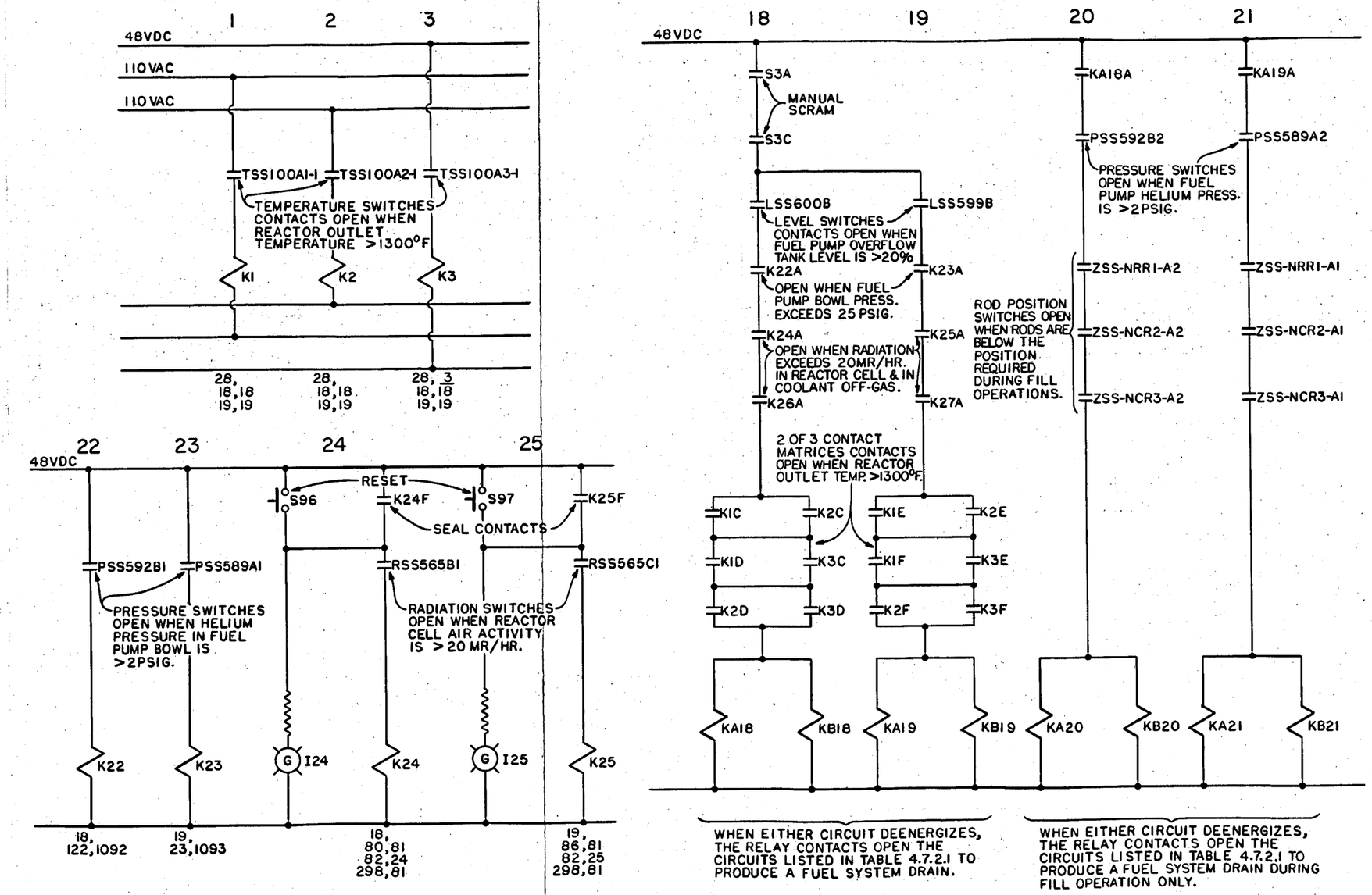


Fig. 4.7.2.2. Emergency fuel drain demand circuits.

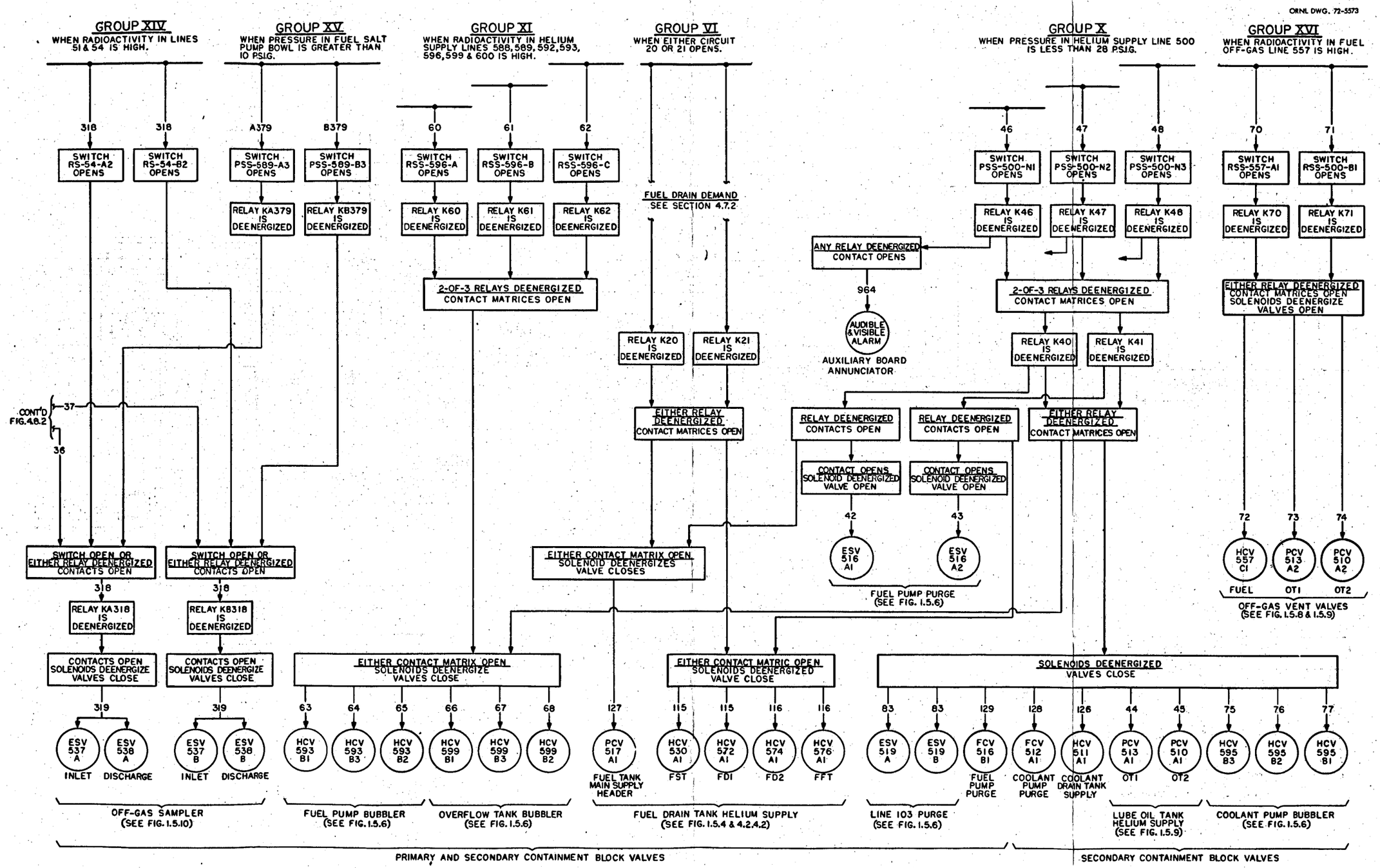


**Fig. 4.8.1. Containment system block valve circuits – sheet 1.**

ORNL DWG. 72-5574

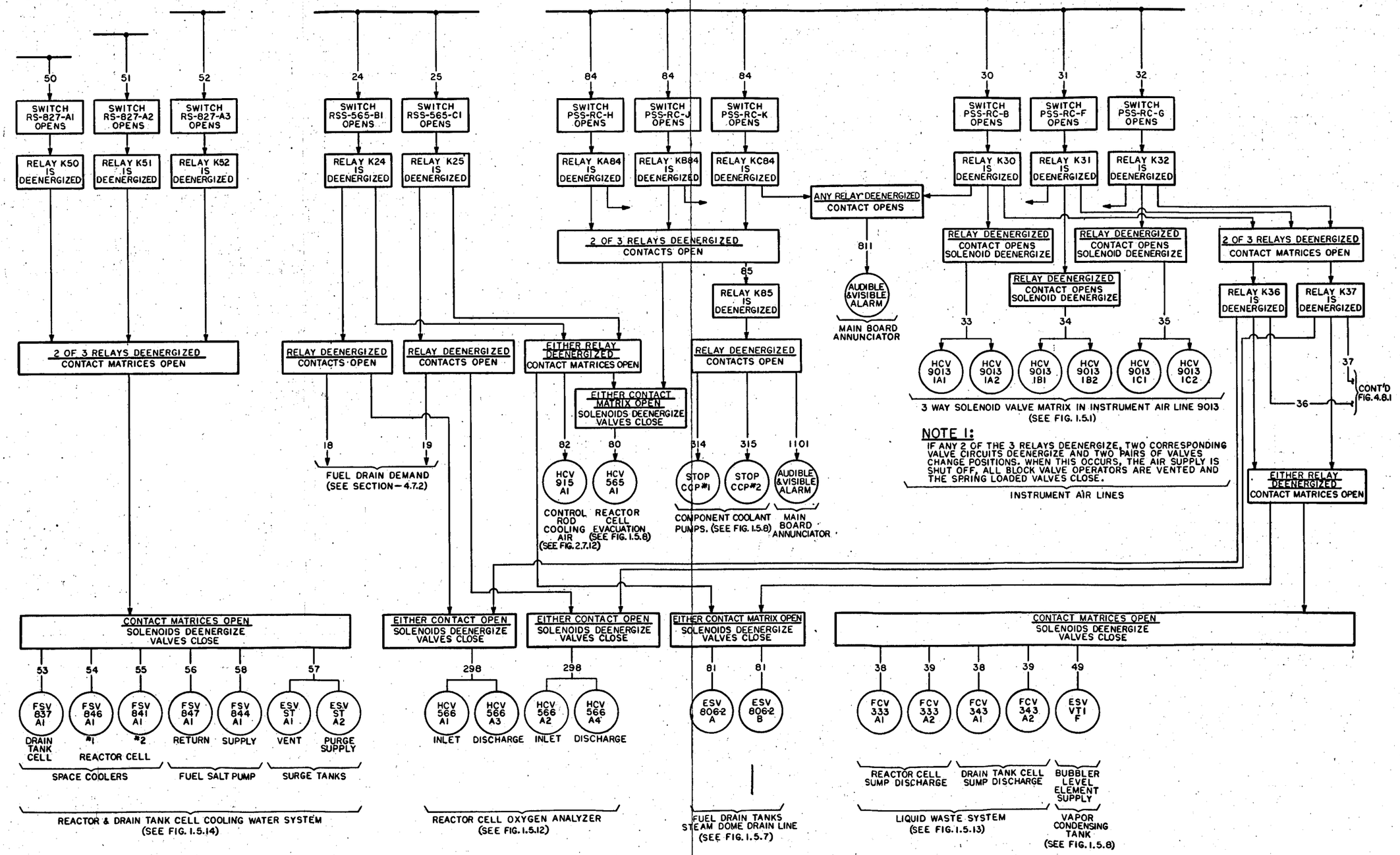


**Fig. 4.8.2. Containment system block valve circuits – sheet 2.**

ORNL DWG. 72-5575

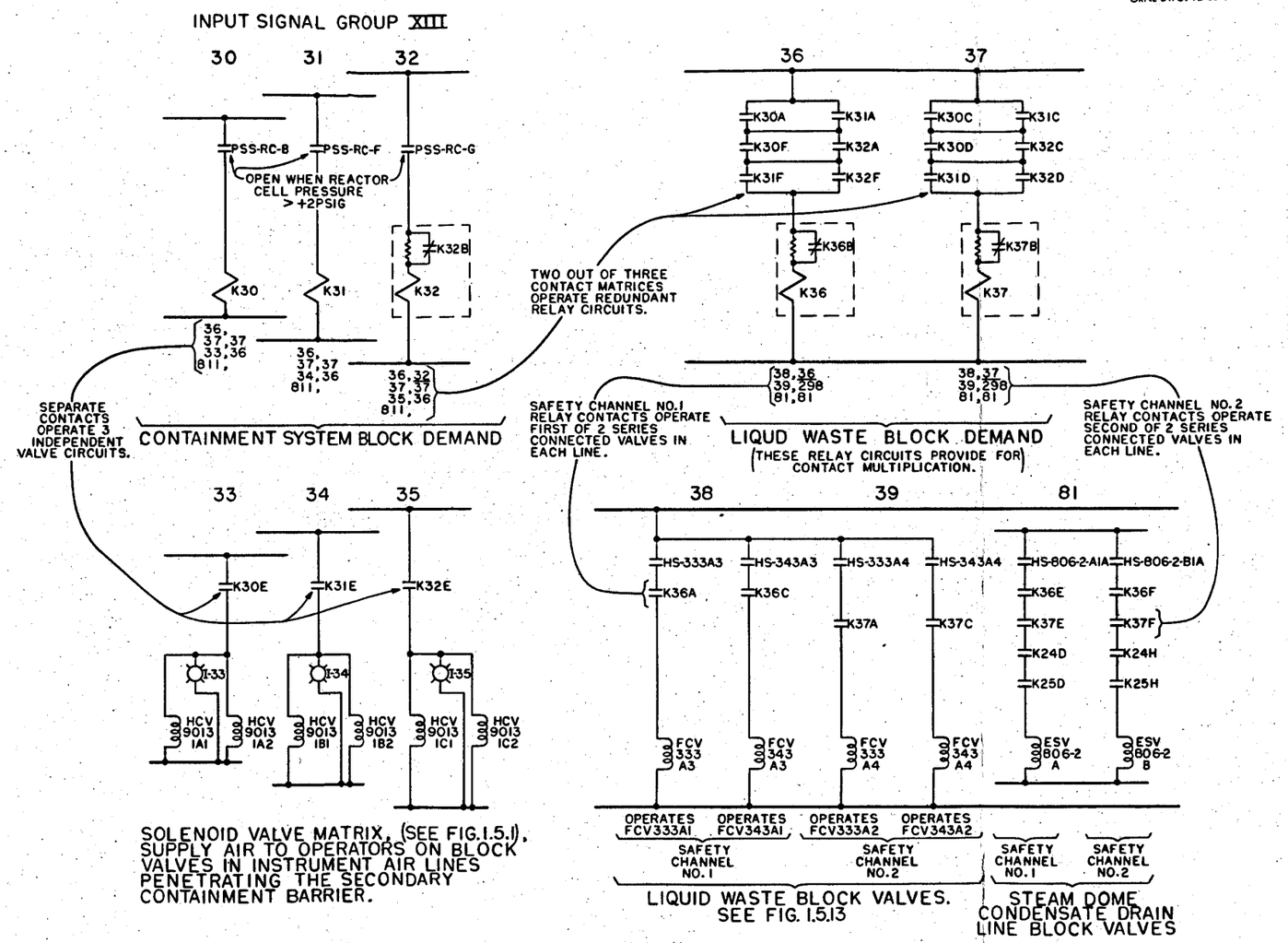


**HS-333A**
**LIQUID WASTE BLOCK VALVES TEST SWITCH**

| CONTACTS | | POSITION (FRONT VIEW) OPEN FCV-333A1 | CLOSE FCV-333A1 FCV-333A2 | OPEN FCV-333A2 | OPEN FCV-333A1 FCV-333A2 | LOCATION CIRCUIT NUMBER |
|---|---|---|---|---|---|---|
| o-\|\|-o | A(1) | | | | | |
| | B(2) | | | | | |
| o-\|\|-o | C(3) | X | | | X | 38 |
| | D(4) | | | X | X | 39 |

**HS-343A**
**LIQUID WASTE BLOCK VALVES TEST SWITCH**

| CONTACTS | | POSITION (FRONT VIEW) OPEN FCV-343A1 | CLOSE FCV-343A1 FCV-343A2 | OPEN FCV-343A2 | OPEN FCV-343A1 FCV-343A3 | LOCATION CIRCUIT NUMBER |
|---|---|---|---|---|---|---|
| o-\|\|-o | A(1) | | | | | |
| | B(2) | | | | | |
| o-\|\|-o | C(3) | X | | | X | 38 |
| | D(4) | | | X | X | 39 |

**Fig. 4.8.3. Containment block valve safety circuits.**

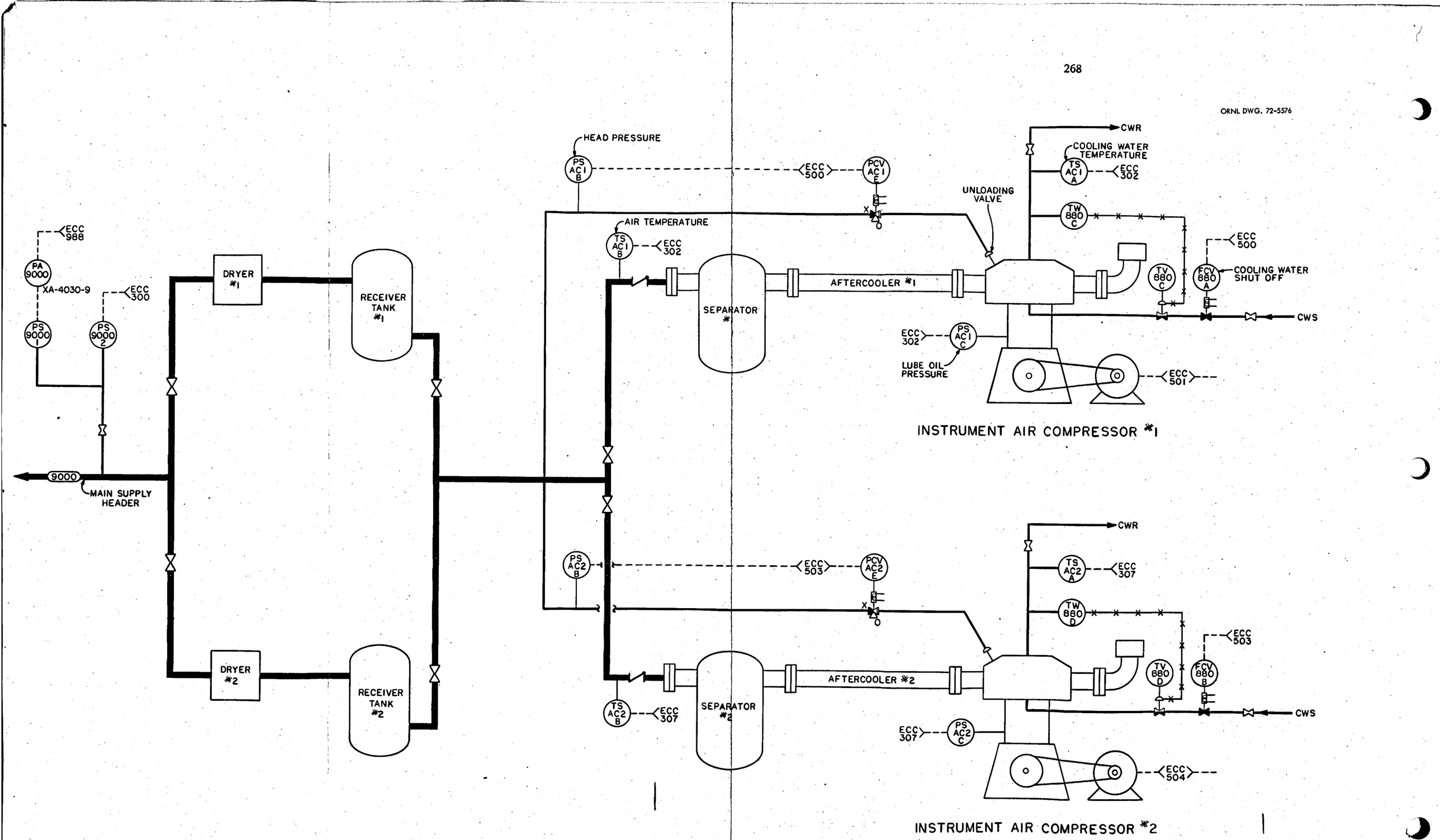


Fig. 4.9.1. Instrument air compressors.

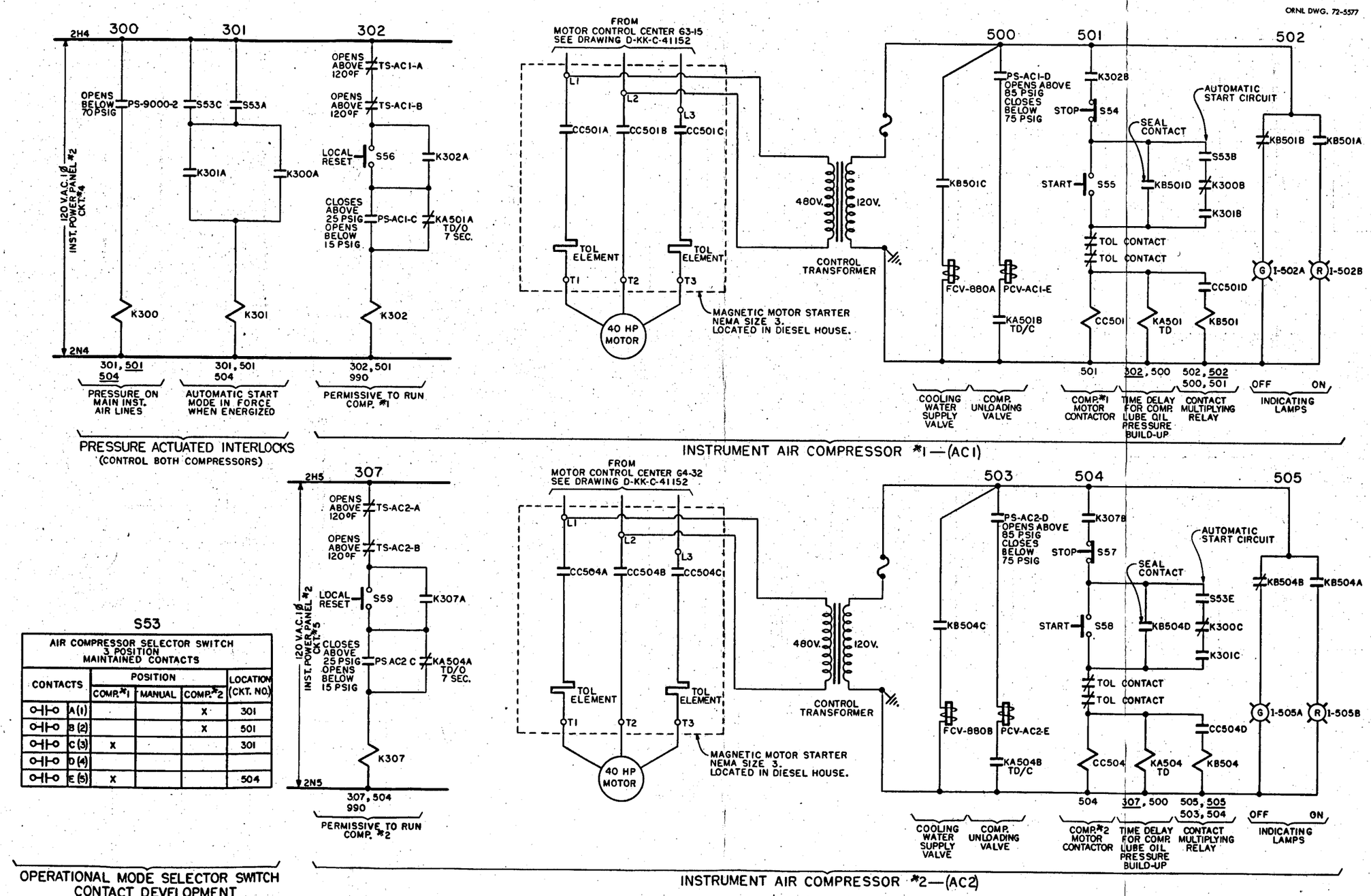


S53

| AIR COMPRESSOR SELECTOR SWITCH 3 POSITION MAINTAINED CONTACTS | | | | | |
|---|---|---|---|---|---|
| CONTACTS | POSITION | | | | LOCATION (CKT. NO.) |
| | COMP. #1 | MANUAL | COMP. #2 | | |
| A (1) | | | X | | 301 |
| B (2) | | | X | | 501 |
| C (3) | X | | | | 301 |
| D (4) | | | | | |
| E (5) | X | | | | 504 |

OPERATIONAL MODE SELECTOR SWITCH CONTACT DEVELOPMENT

**Fig. 4.9.2. Instrument air compressor control circuits.**

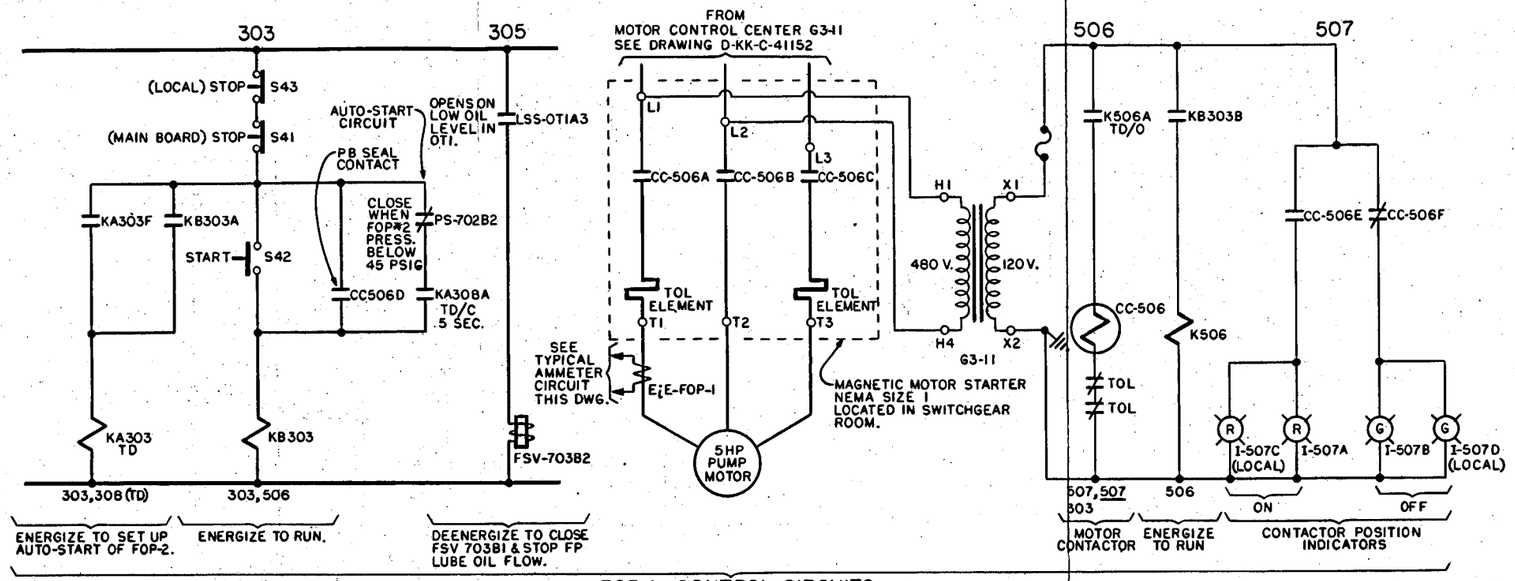


FOP-1 CONTROL CIRCUITS

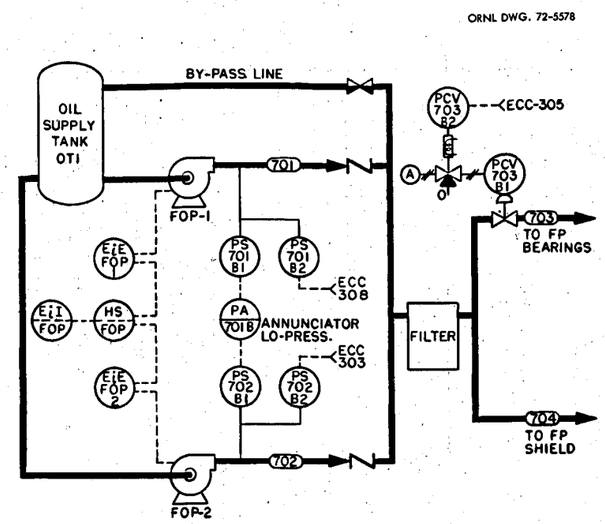


SCHEMATIC FLOW DIAGRAM—FUEL SALT PUMP LUBRICATING OIL SYSTEM.

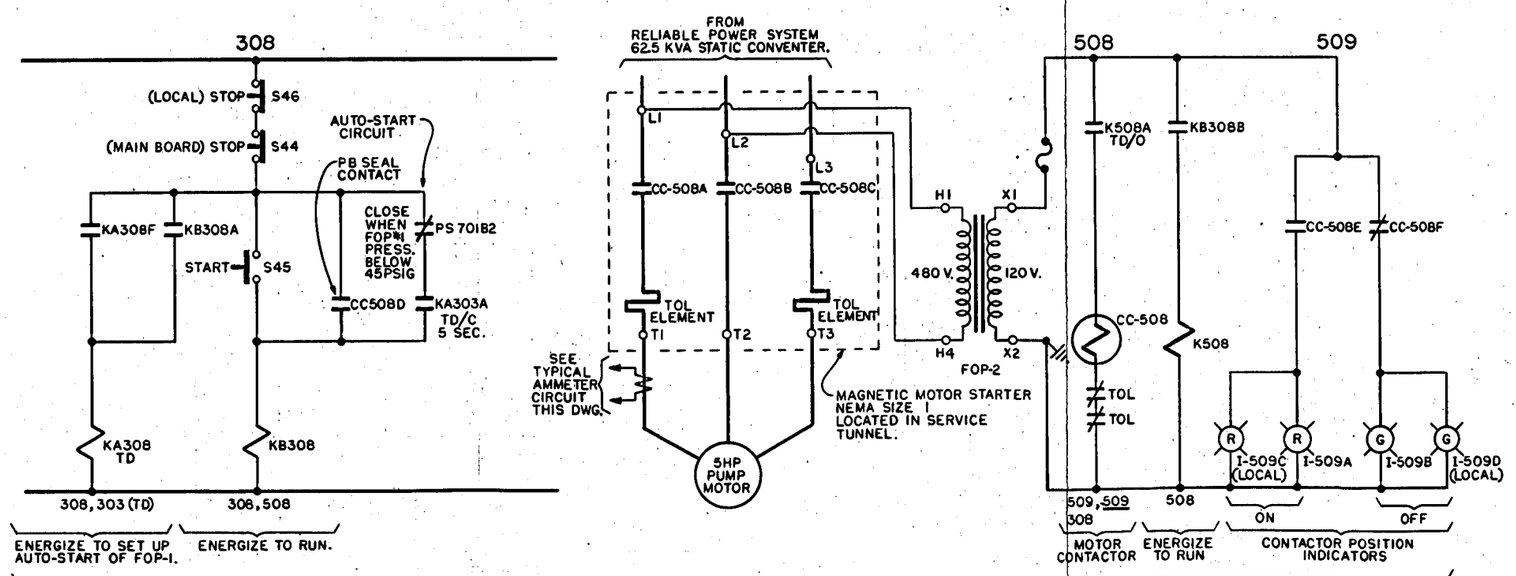


FOP-2 CONTROL CIRCUITS

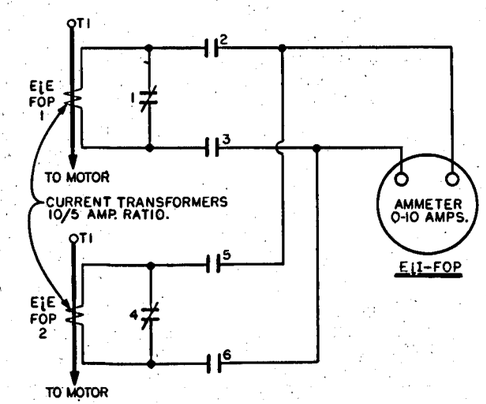


PUMP MOTOR CURRENT MEASURING CIRCUITS FOP-1 AND FOP-2

**HS-FOP AMMETER SELECTOR SWITCH**

| CONTACT NO. | POSITION | | |
|---|---|---|---|
| | FOP-1 | OFF | FOP-2 |
| 1 | | X | X |
| 2 | X | | |
| 3 | X | | |
| 4 | X | X | |
| 5 | | | X |
| 6 | | | X |

X-DENOTES CLOSE CONTACTS

Fig. 4.9.3. Lube oil pump control circuits.

ORNL DWG. 72-5579

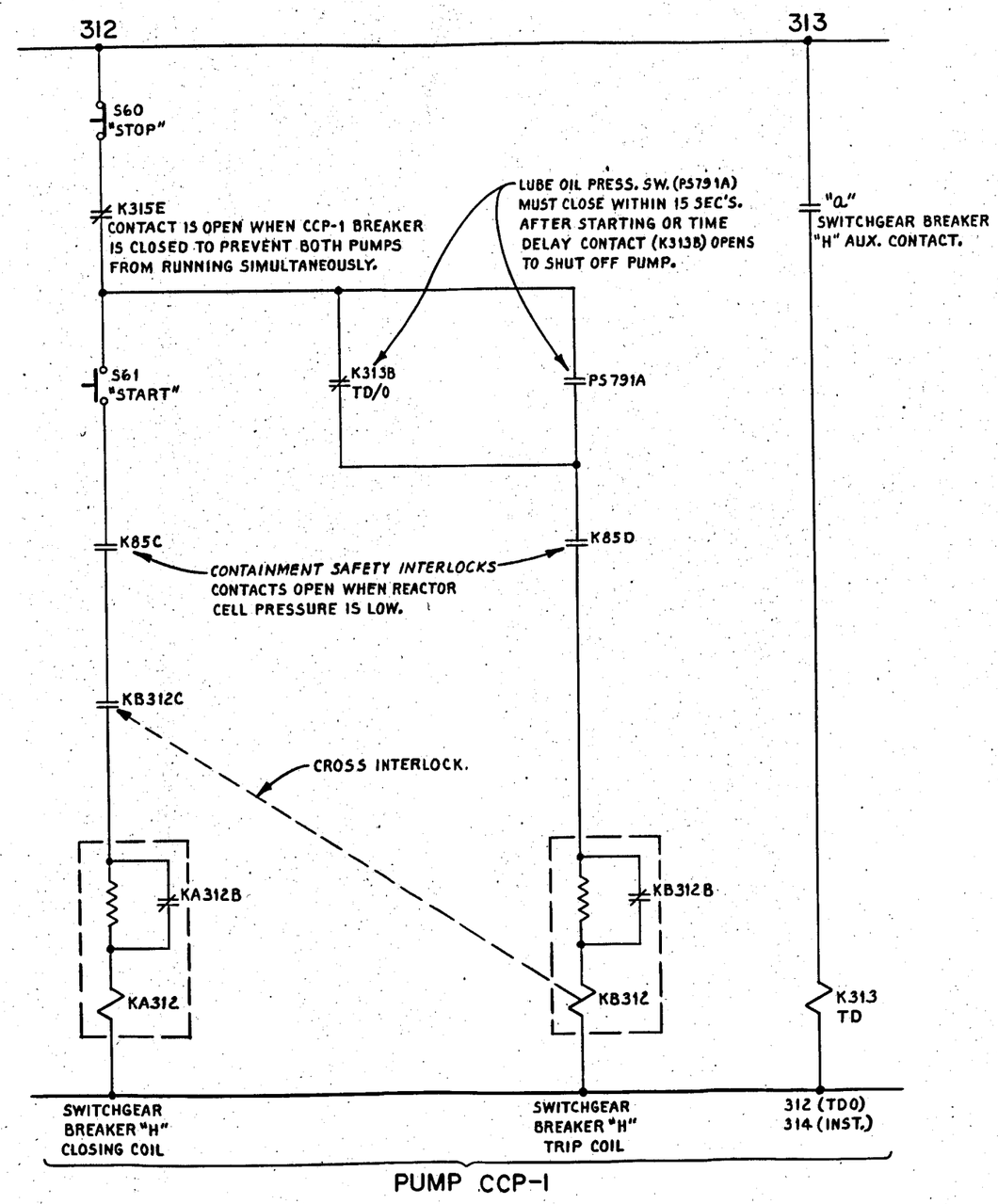


Fig. 4.9.4. Control circuit for component coolant pumps.

ORNL DWG. 72-5580

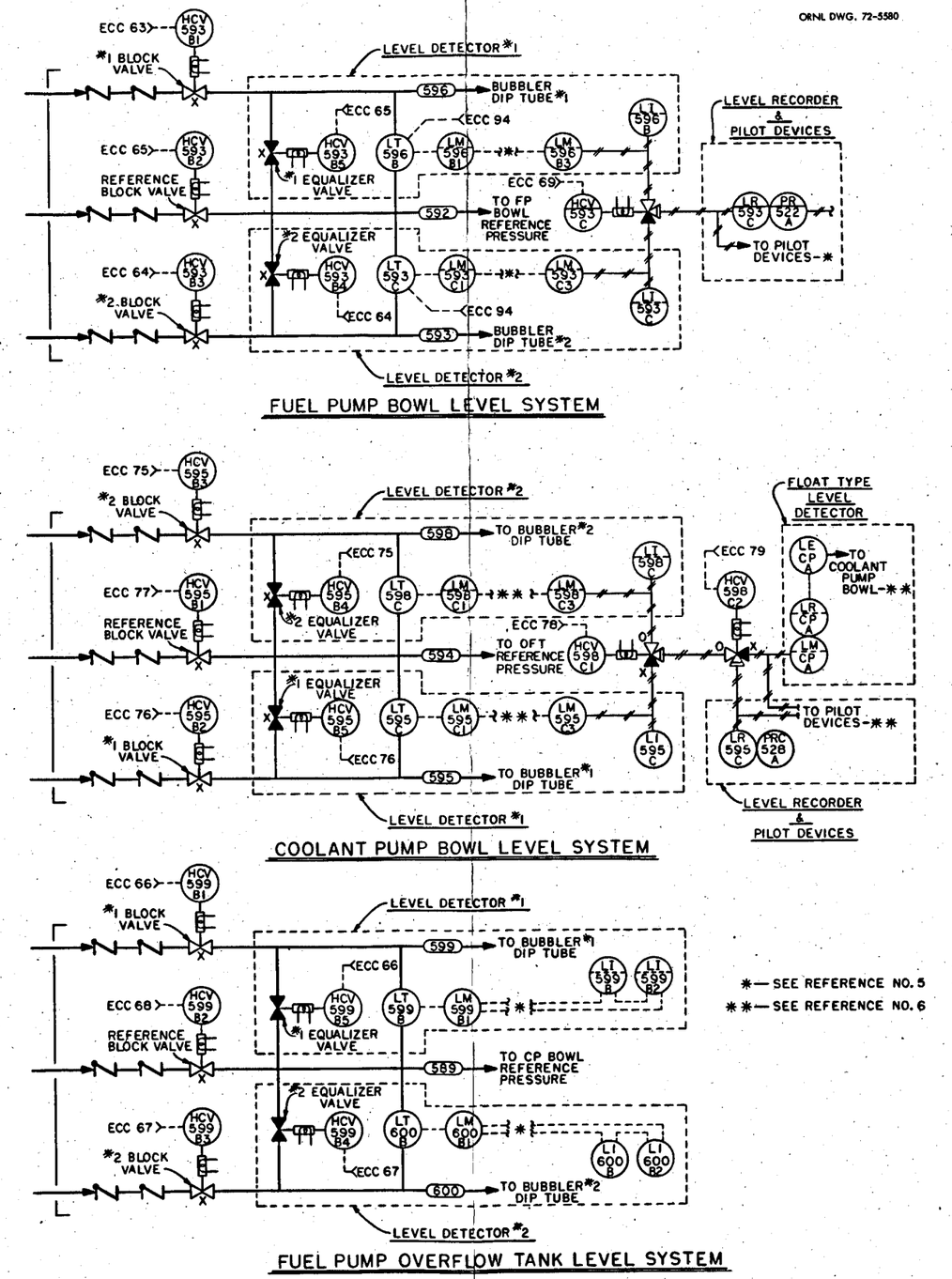


Fig. 4.9.5. Fuel and coolant pump level measuring systems.

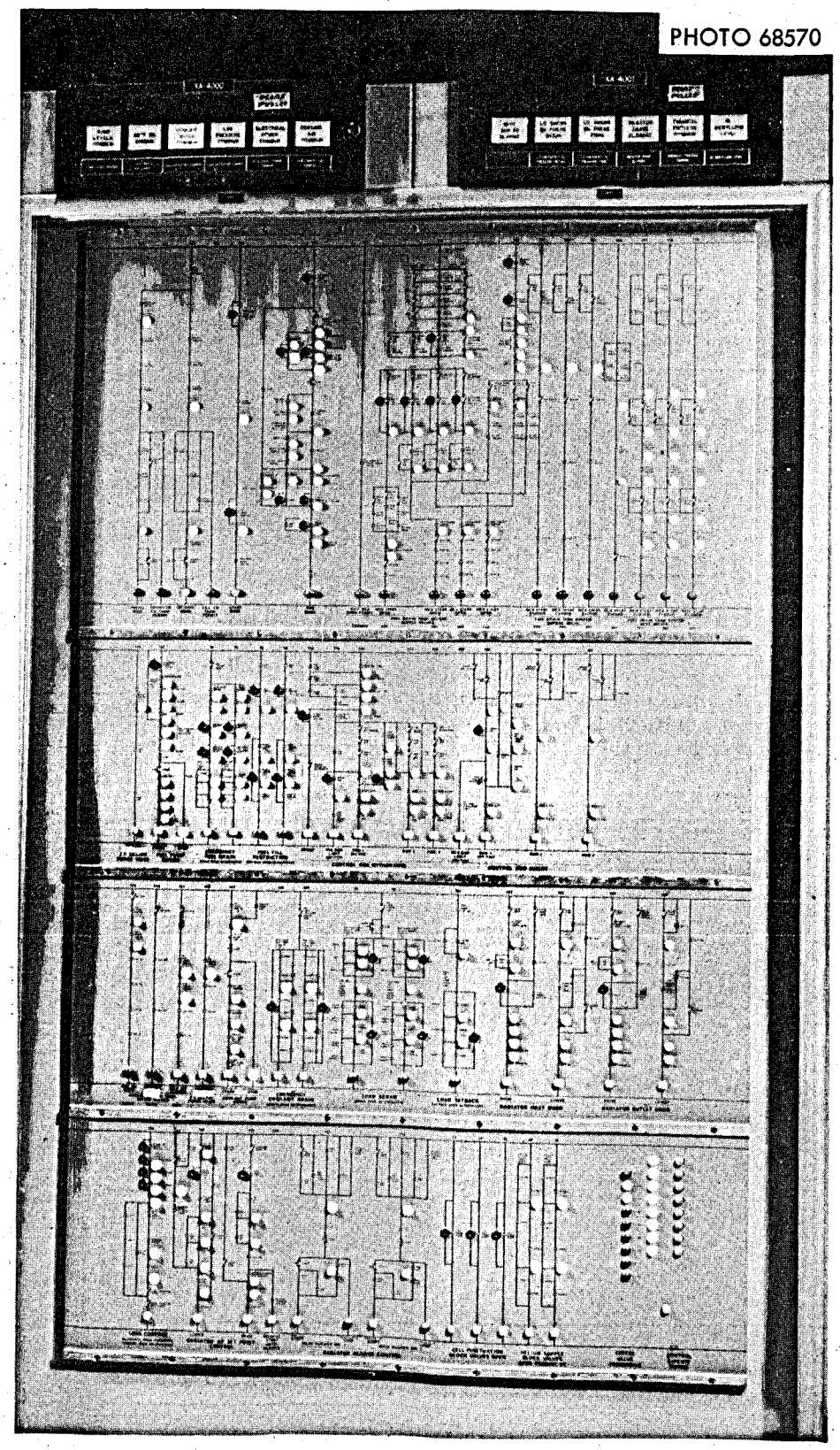


Fig. 4.11.1. MSRE jumper board.

10

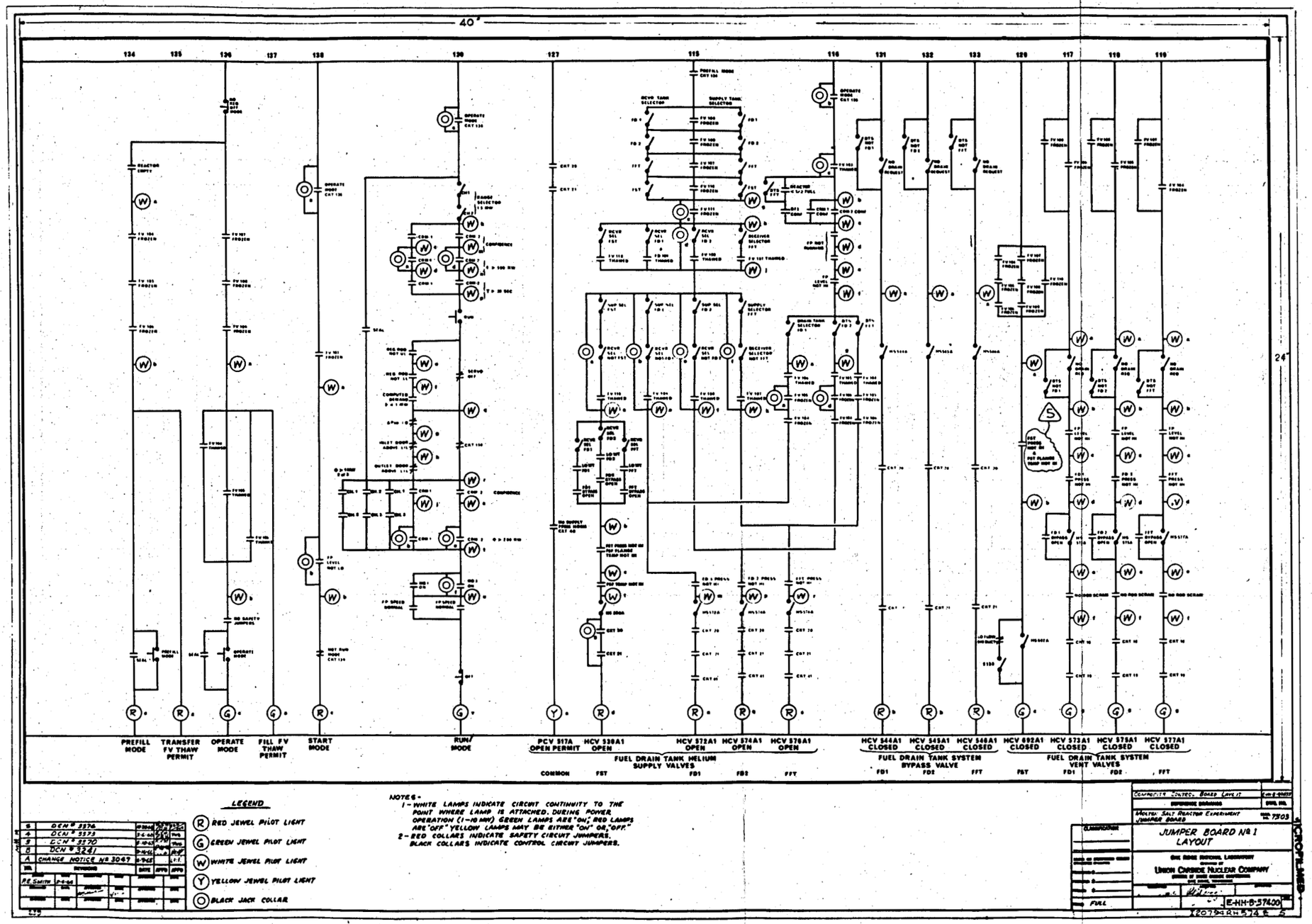


Fig. 4.11.2. Jumper board no. 1, layout.

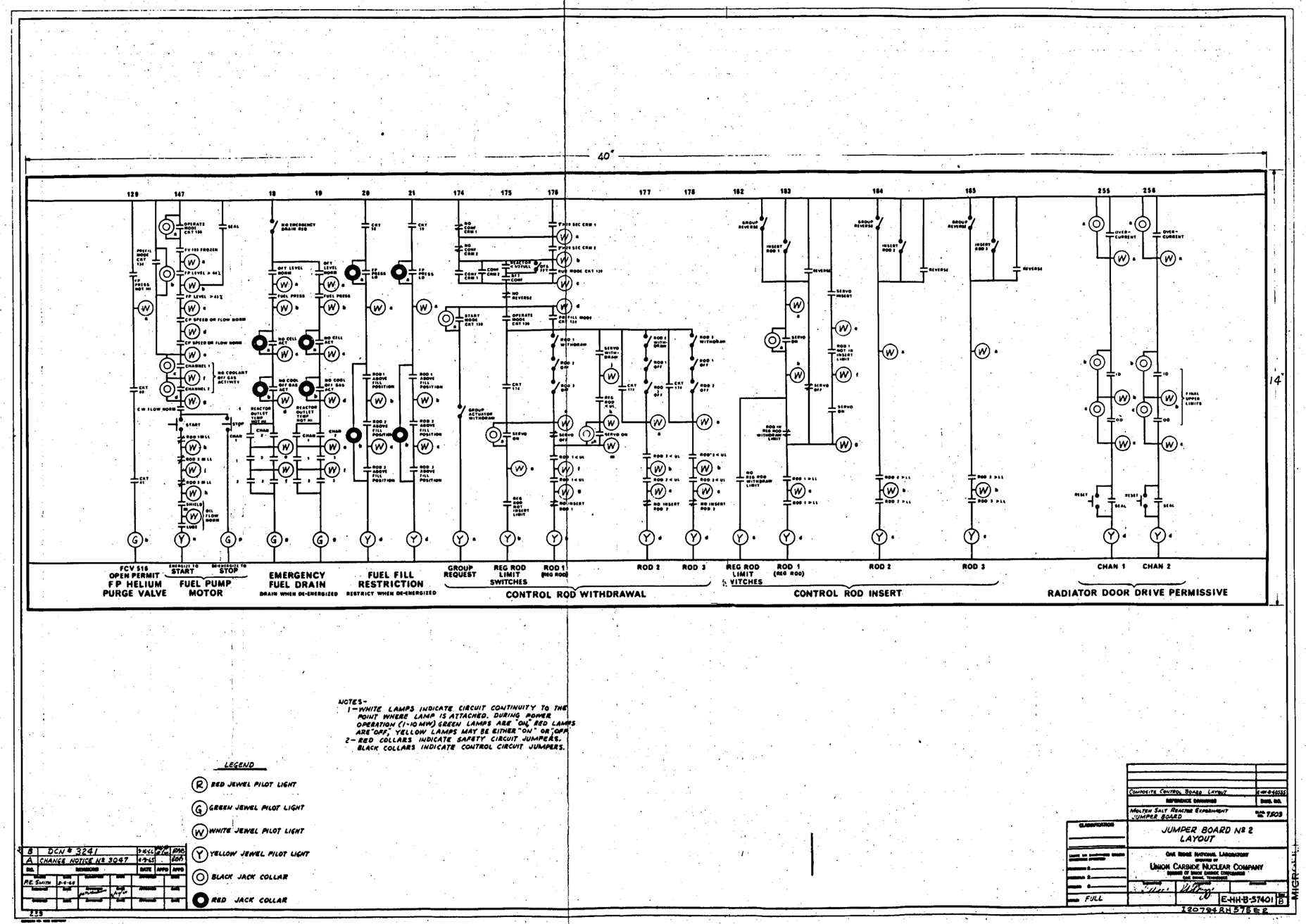


Fig. 4.11.3. Jumper board no. 2, layout.

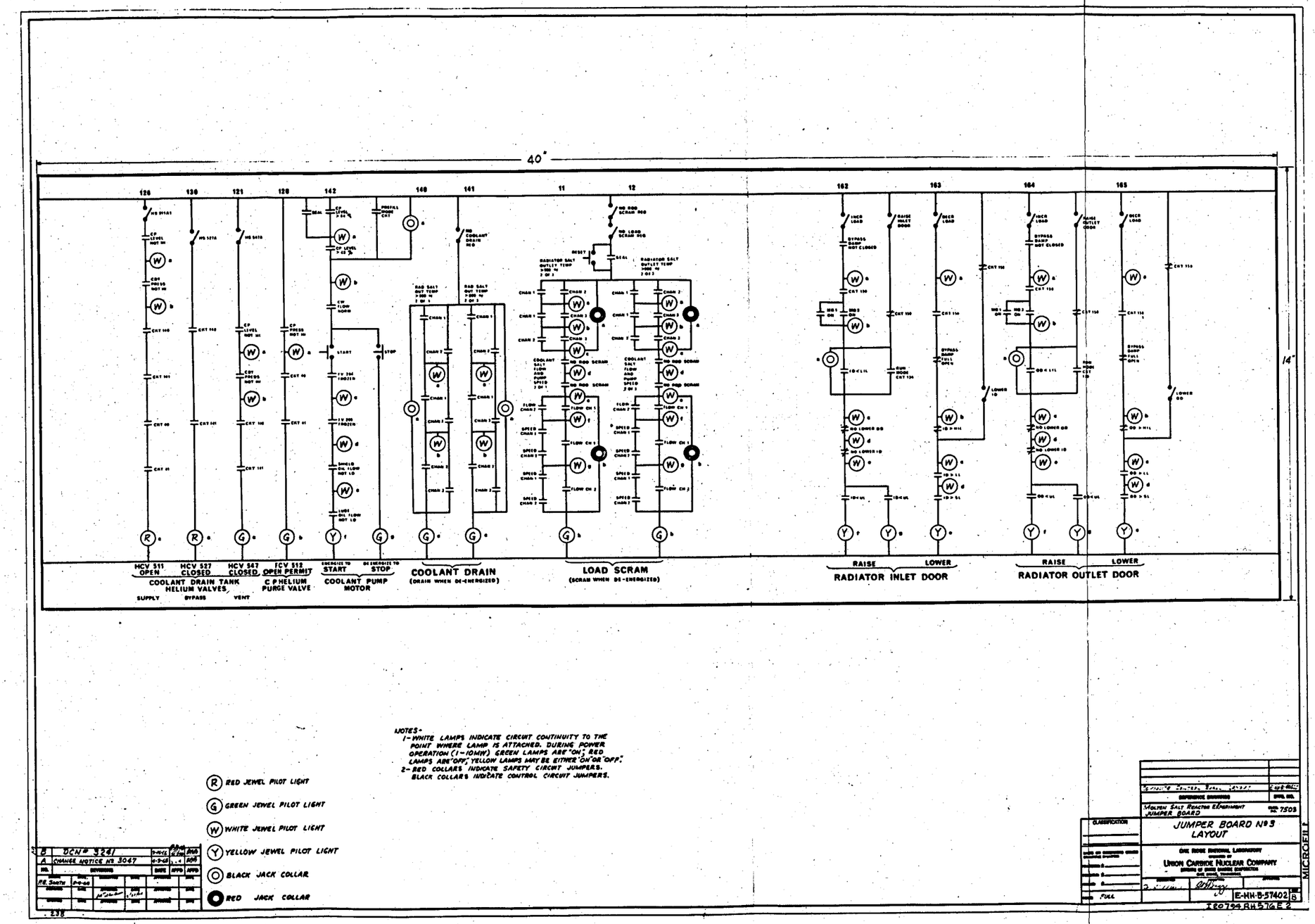


Fig. 4.11.4. Jumper board no. 3, layout.

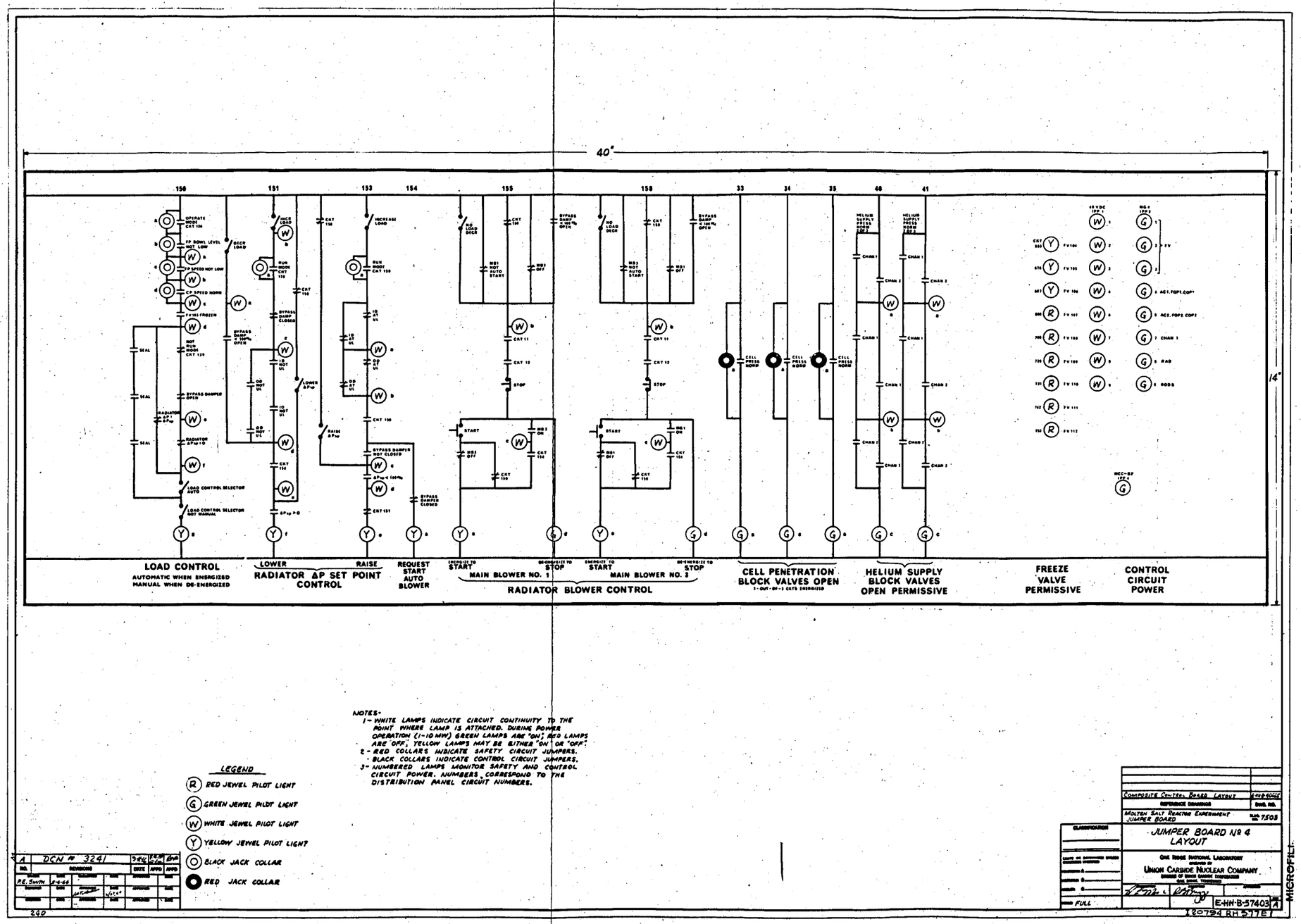


Fig. 4.11.5. Jumper board no. 4, layout.

ORNL-DWG 64-6080

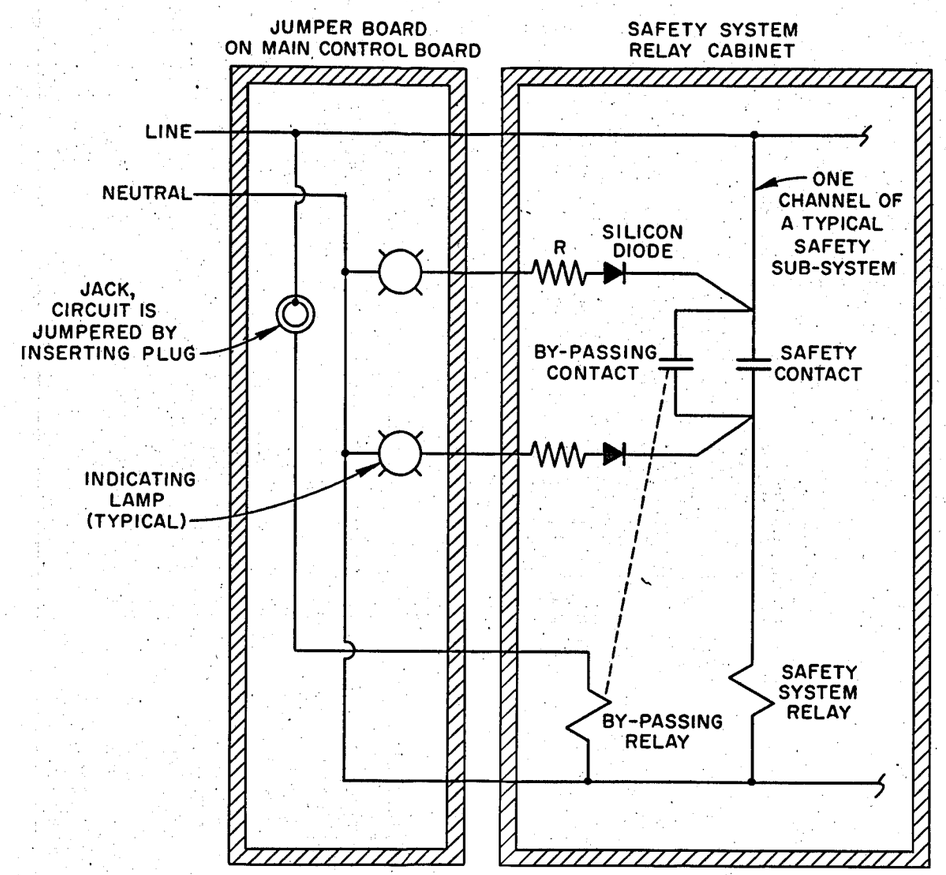


NOTE: THE JUMPERS AND THE INDICATING LAMPS ARE ON THE MAIN CONTROL PANEL AND VISIBLE FROM THE OPERATOR'S CONSOLE.

**Fig. 4.11.6. Diagram of safety system bypassing with jumper board.**

ORNL DWG. 72-5581

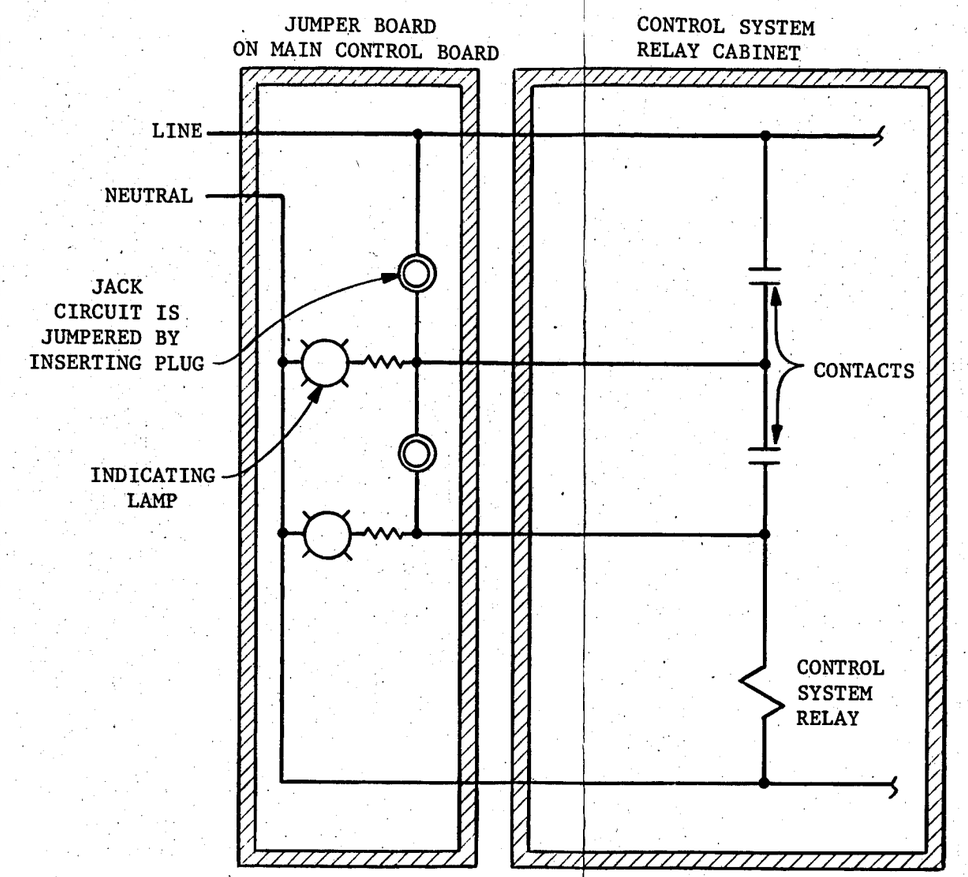


NOTE: THE JUMPERS AND THE INDICATING LAMPS ARE ON THE MAIN CONTROL PANEL AND VISIBLE FROM THE OPERATOR'S CONSOLE.

**Fig. 4.11.7. Diagram of control system bypassing with jumper board.**

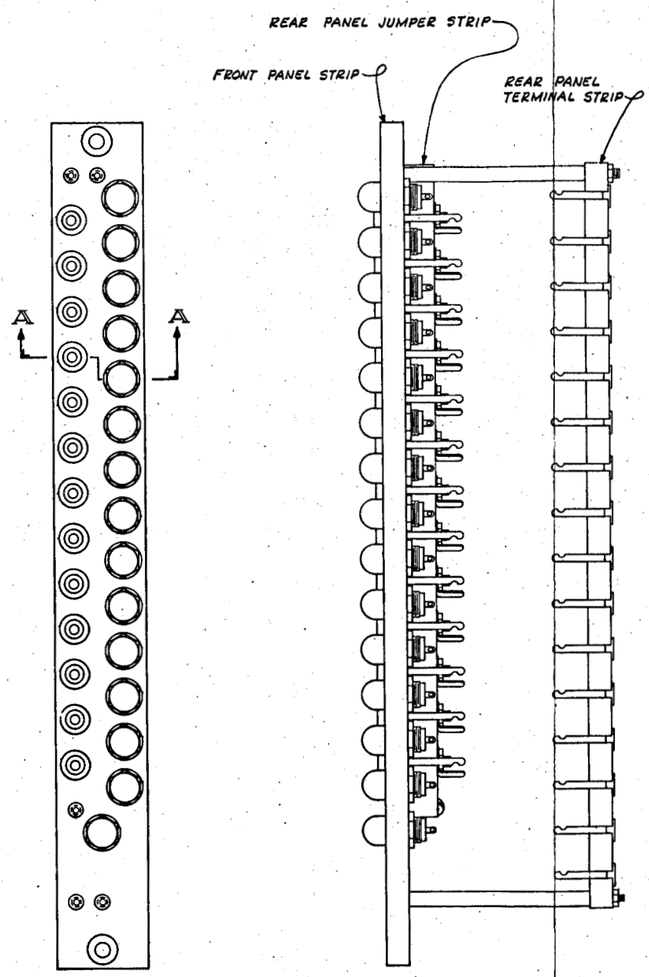


14" FRONT PANEL STRIP ASSEMBLY DIAGRAM

THIS ASSEMBLY SHOWN WITH MAX. NUMBER OF LIGHTS & JUMPERS
THE 24" ASSEMBLY SHALL BE SIMILAR

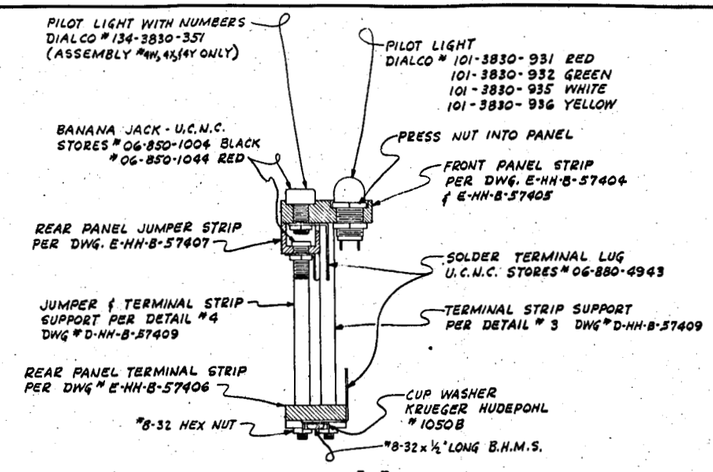


SECTION A-A

NOTES-

1- AT ASSEMBLY, ASSEMBLE FRONT PANEL STRIP, REAR PANEL JUMPER STRIP, AND REAR PANEL TERMINAL STRIP, (ALL WITH THE SAME PART NUMBER WHICH BECOMES THE ASSEMBLY NUMBER), USING PILOT LIGHTS, JUMPERS, AND OTHER HARDWARE AS REQUIRED PER ASSEMBLY DIAGRAM. (THIS DRAWING)

2- USE JUMPER BOARD LAYOUTS DRAWING NUMBER E-HH-B-57400, E-HH-B-57401, E-HH-B-57402, AND E-HH-B-57403 TO DETERMINE COLOR OF PILOT LIGHT JEWELS, AND JACK COLLARS.

3- USE MODEL ASSEMBLY (FURNISHED BY I&C) AS A GUIDE FOR ALL ASSEMBLY'S.

4- REAR PANEL TERMINAL STRIP FOR ASSEMBLY Nº 4X IS SPECIAL AND SHALL REQUIRE SOLDER TERMINAL LUG U.C.N.C. STORES # 06-880-4923, #8-32 x ½" LONG B.H.M.S. & NO. CUP WASHER.

| | |
|---|---|
| JUMPER BOARD #1,2,3&4 - WIRING SCHEDULE & INSTRUCTIONS | D-HH-B-57410 |
| M.B. PANEL #1 & #2 DETAIL LAYOUT | D-HH-B-40557 |
| JUMPER BOARD #1,2,3,4 MISCELLANEOUS DETAILS | D-HH-B-57409 |
| JUMPER BOARD #1,2,3,4 REAR PANEL JUMPER STRIP DRILLING DETAILS | E-HH-B-57407 |
| JUMPER BOARD #1,2,3,4 REAR PANEL TERMINAL STRIP DRILLING DETAILS | E-HH-B-57406 |
| JUMPER BOARD #2,3,4 FRONT PANEL STRIP DRILLING DETAILS | E-HH-B-57405 |
| JUMPER BOARD #1 FRONT PANEL STRIP DRILLING DETAILS | E-HH-B-57404 |
| JUMPER BOARD #4 LAYOUT | E-HH-B-57403 |
| JUMPER BOARD #3 LAYOUT | E-HH-B-57402 |
| JUMPER BOARD #2 LAYOUT | E-HH-B-57401 |
| JUMPER BOARD #1 LAYOUT | E-HH-B-57400 |
| REFERENCE DRAWINGS | NO. |

OAK RIDGE NATIONAL LABORATORY
OPERATED BY
UNION CARBIDE NUCLEAR COMPANY
DIVISION OF UNION CARBIDE CORPORATION
OAK RIDGE, TENNESSEE

MOLTEN SALT REACTOR EXPERIMENT
JUMPER BOARD
BLDG. NO. 7503

JUMPER BOARD Nº 1, 2, 3, & 4
FRONT PANEL STRIP
ASSEMBLY

SUBMITTED | APPROVED | APPROVED
APPROVED

D-HH- B 57408 D REV.

LIMITS ON DIMENSIONS UNLESS OTHERWISE SPECIFIED:
FRACTIONS ±
DECIMALS ±
ANGLES ±
SCALE: FULL

| NO. | REVISIONS | | | DATE | APPD | APPD |
|---|---|---|---|---|---|---|
| DRAWN R.E. SMITH | DATE 5-20-64 | SUBMITTED | DATE | APPROVED | | DATE |
| DESIGNED | DATE | APPROVED | DATE | APPROVED | | DATE |
| CHECKED | DATE 6/11/64 | APPROVED | DATE | APPROVED | | DATE |

253

I20794RH 582D

MICROFILMED

Fig. 4.11.8. Jumper board nos. 1, 2, 3, and 4, front panel strip assembly.

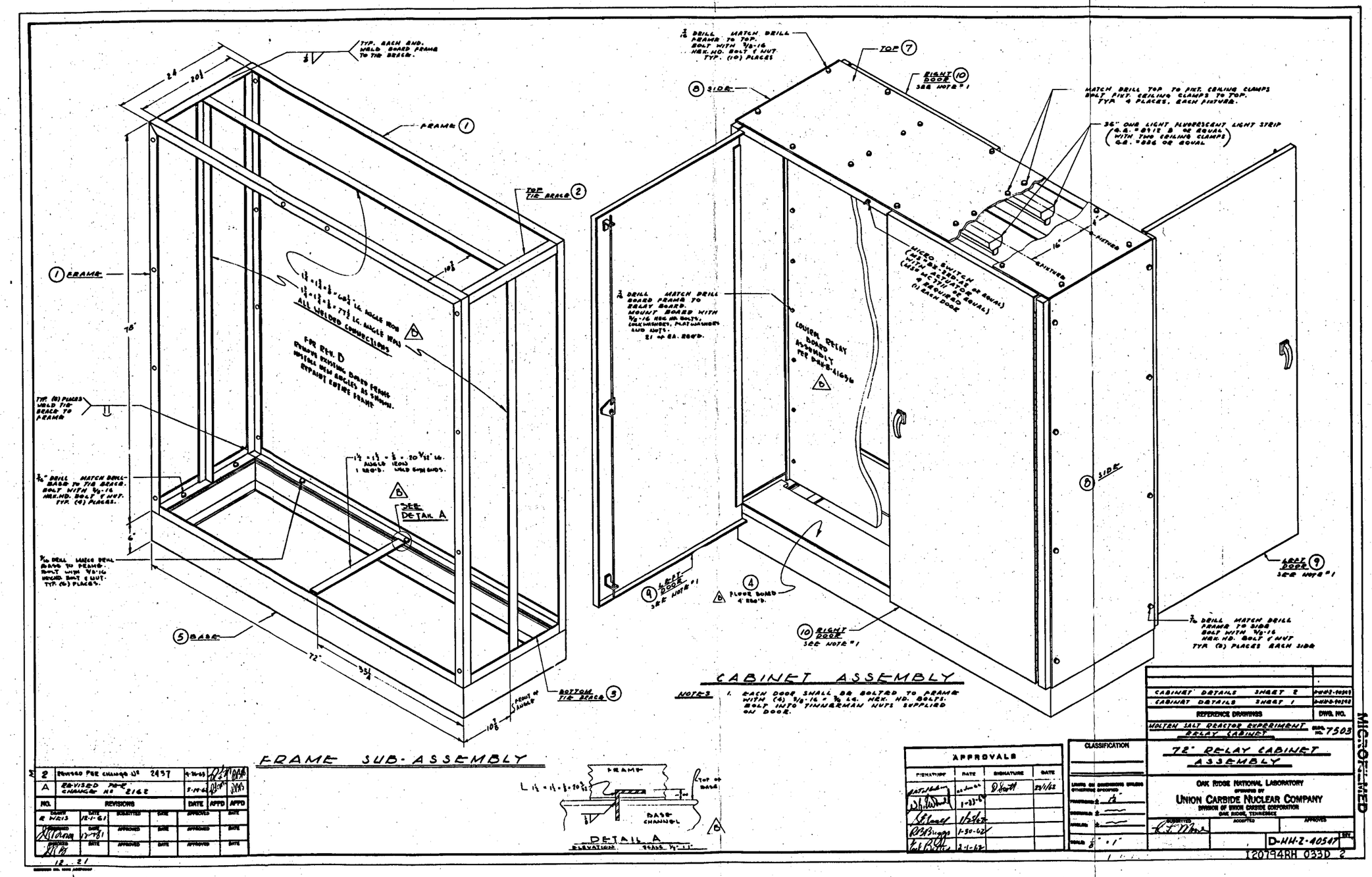


Fig. 4.11.9. 72-in. relay cabinet, assembly.

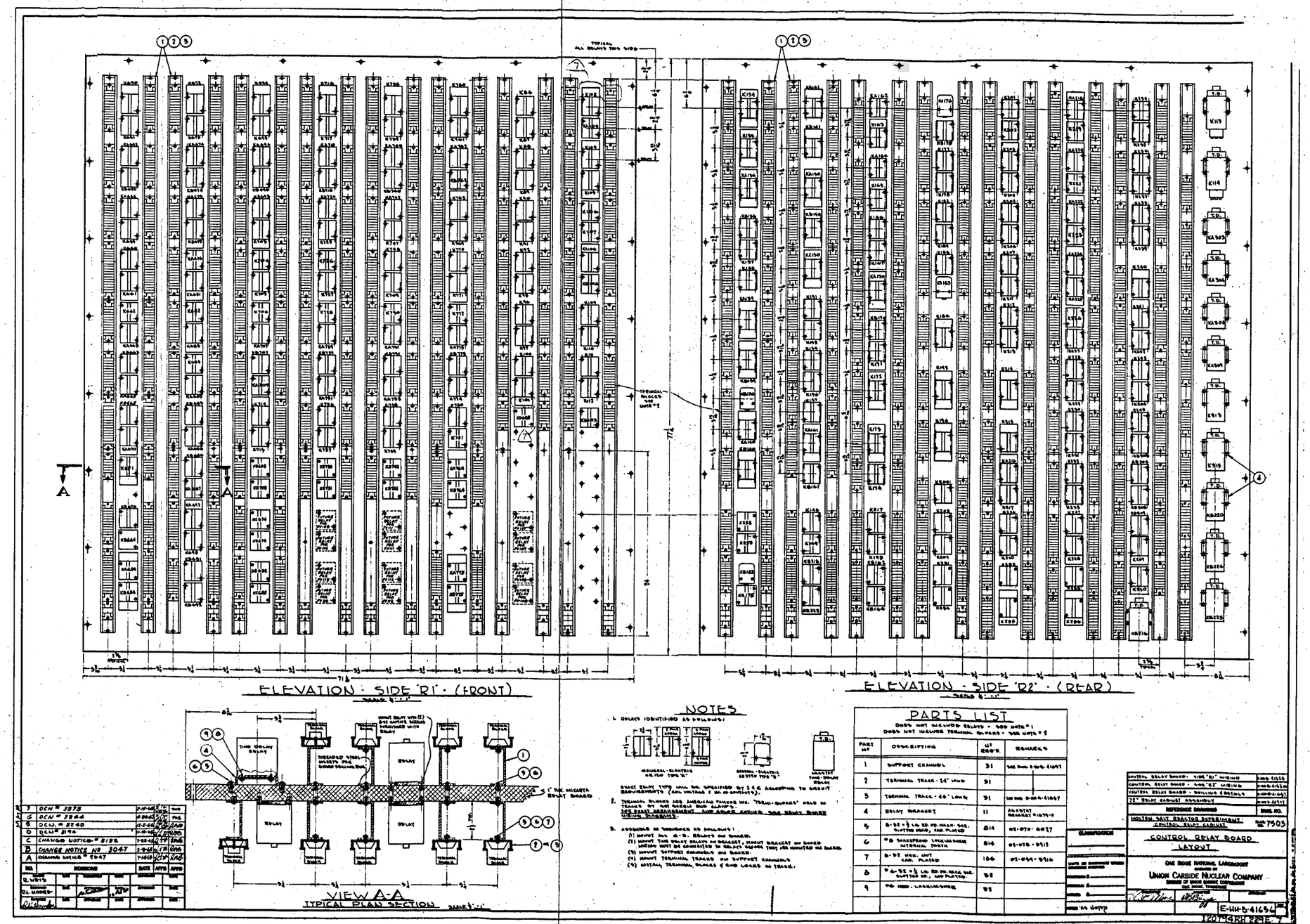


Fig. 4.11.10. Control relay board, layout.

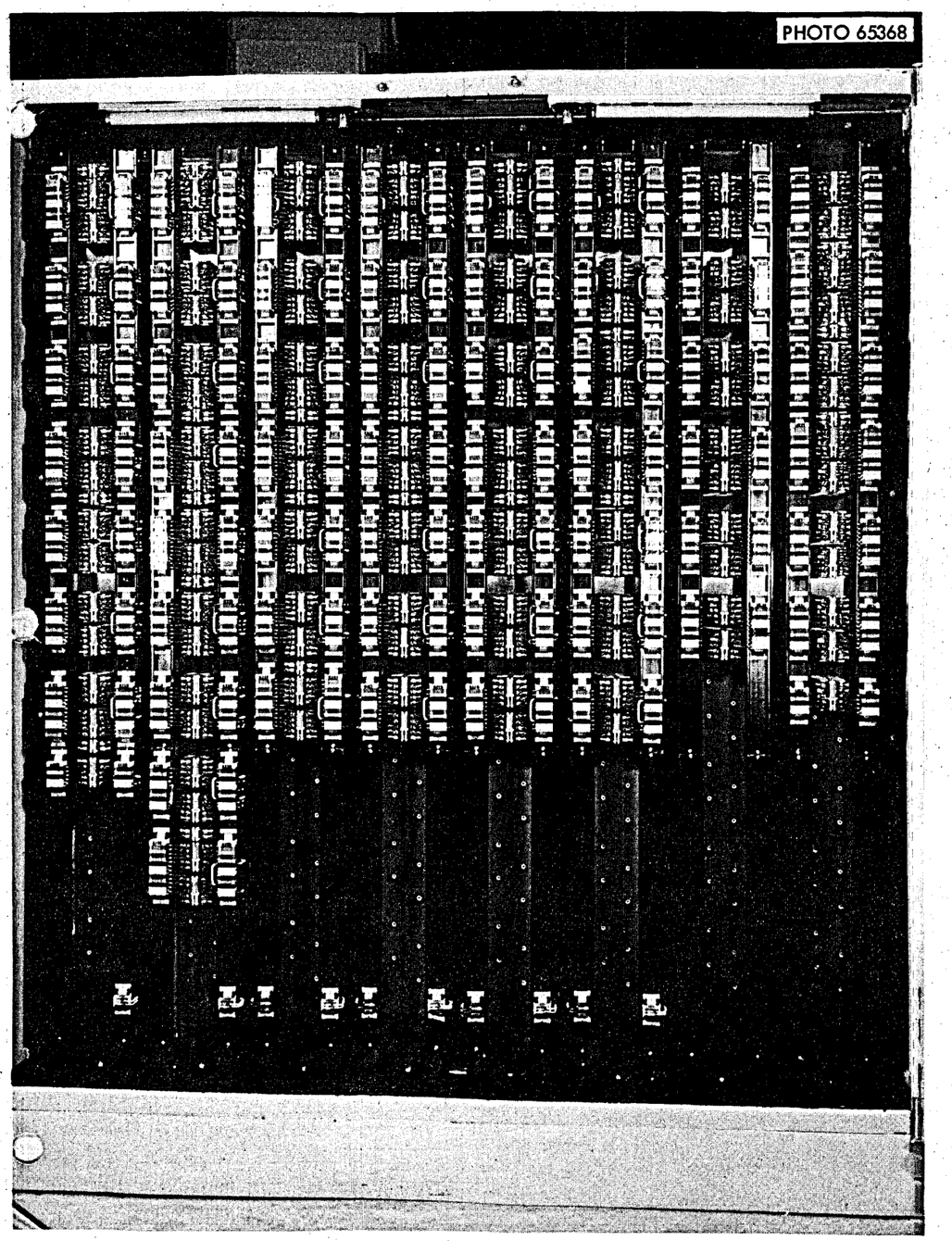


Fig. 4.11.11. Control relay board.

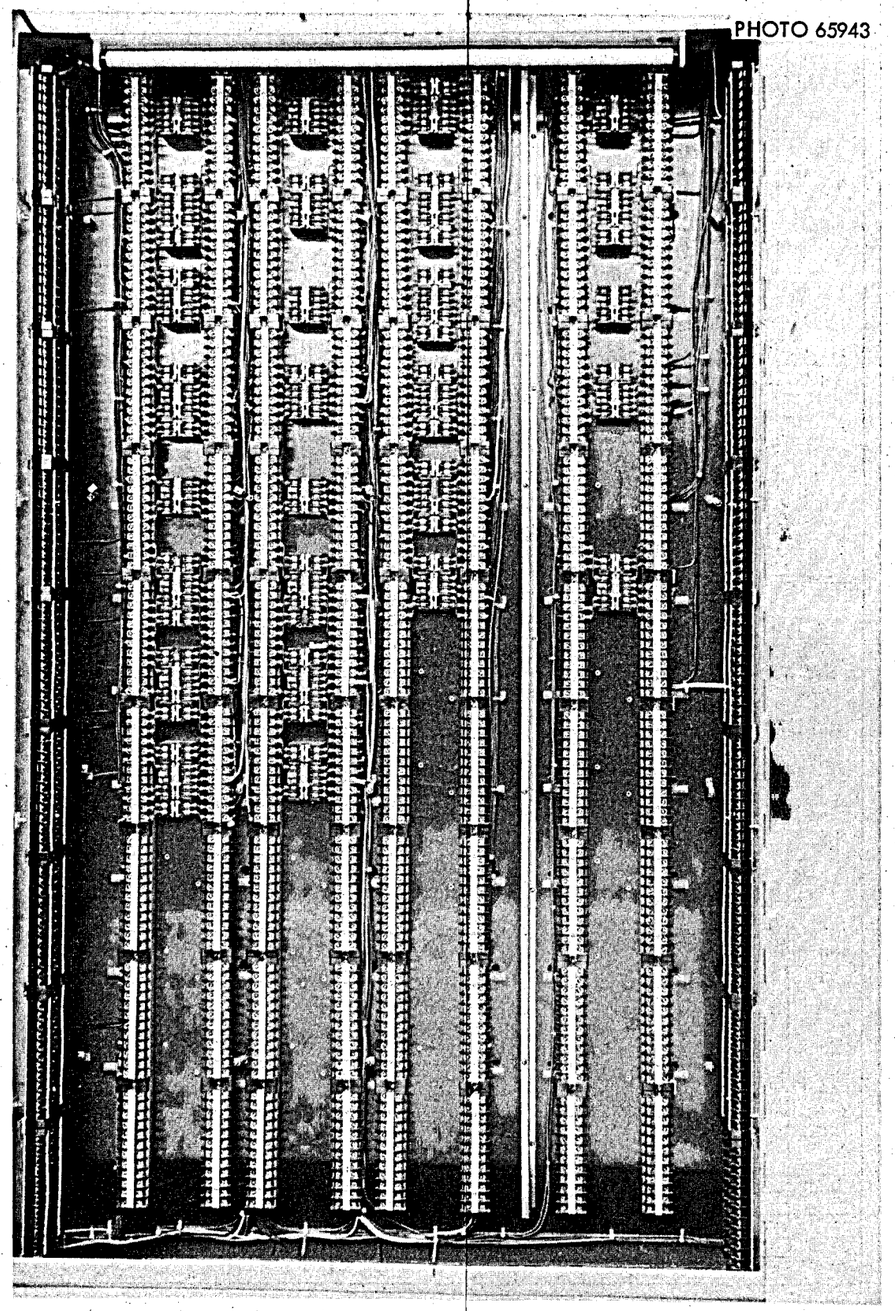


Fig. 4.11.12. Safety relay board.

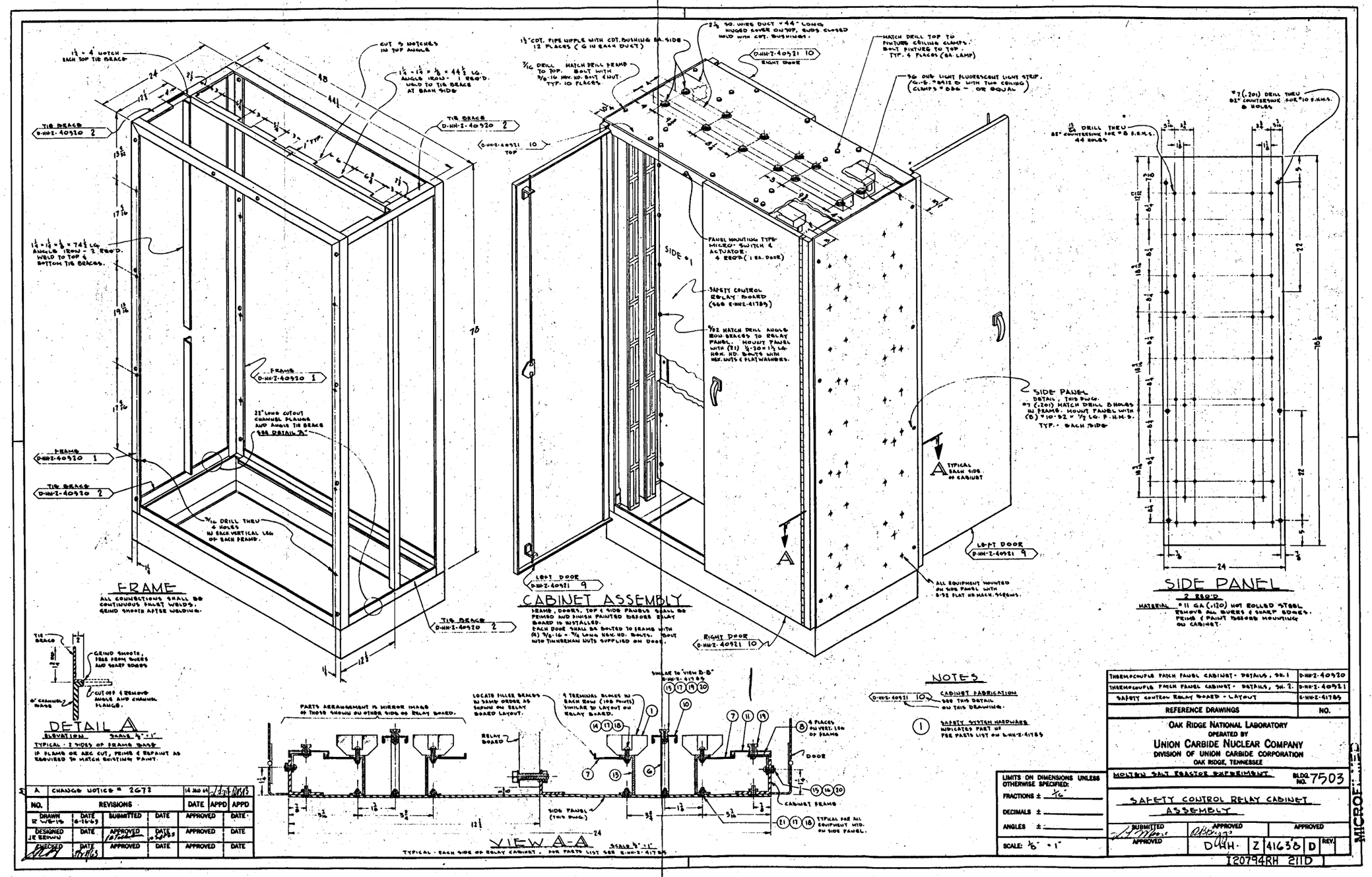


Fig. 4.11.13. Safety control relay cabinet, assembly.

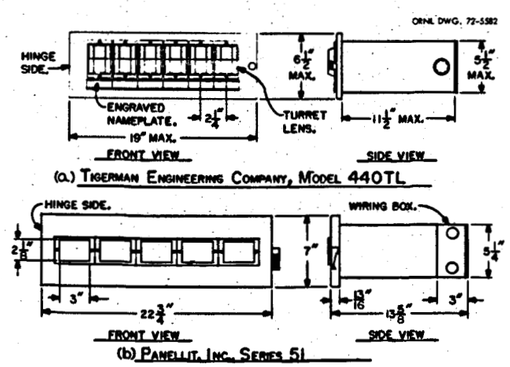


Fig. 4.12.1. Annunciator chassis.

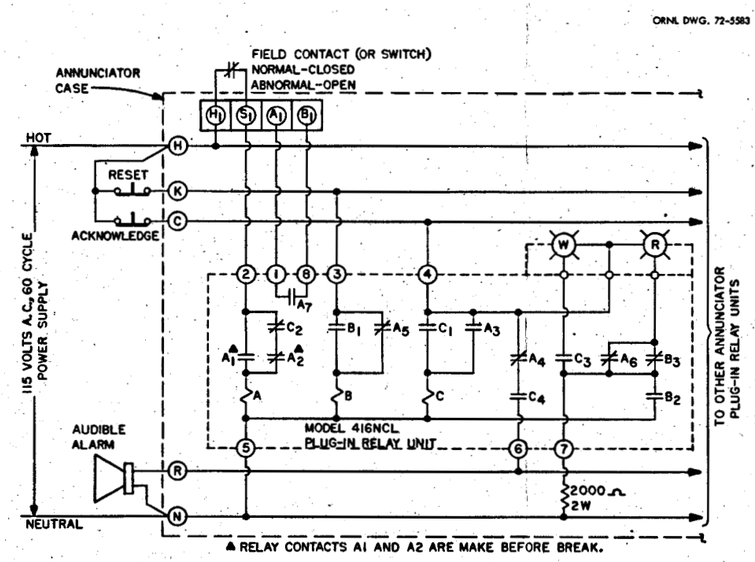


| OPERATIONAL SEQUENCE | | | | | | |
|---|---|---|---|---|---|---|
| | OPERATING CONDITION | SIGNAL CONTACT | RED LIGHT | WHITE LIGHT | AUDIBLE ALARM | AUXILIARY CONTACT |
| 1 | NORMAL CONDITION | CLOSED | DIM | DIM | OFF | CLOSED |
| 2 | ABNORMAL CONDITION, BEFORE ACKNOWLEDGED | OPEN | BRIGHT | BRIGHT | ON | OPEN |
| * 3 | ABNORMAL CONDITION, AFTER ACKNOWLEDGED | OPEN | BRIGHT | OFF | OFF | OPEN |
| 4 | NORMAL CONDITION RETURNS, BEFORE RESET | CLOSED | OFF | BRIGHT | OFF | CLOSED |
| ** 5 | NORMAL CONDITION, AFTER RESET | CLOSED | DIM | DIM | OFF | CLOSED |

* IF AFTER STEP 2, THE NORMAL CONDITION RETURNS BEFORE THE ACKNOWLEDGE BUTTON IS OPERATED, THE ANNUNCIATOR SHALL REMAIN IN THE STEP 2 CONDITION UNTIL ACKNOWLEDE BUTTON IS OPERATED, AFTER WHICH THE ANNUNCIATOR SHALL GO TO STEP 4 CONDITION.

** IF AFTER STEP 4, THE ABNORMAL CONDITION RETURNS BEFORE THE RESET BUTTON IS OPERATED, THE ANNUNCIATOR SHALL RETURN TO STEP 2 CONDITION.

Fig. 4.12.2. Tigerman Engineering Company annunciator control circuit.

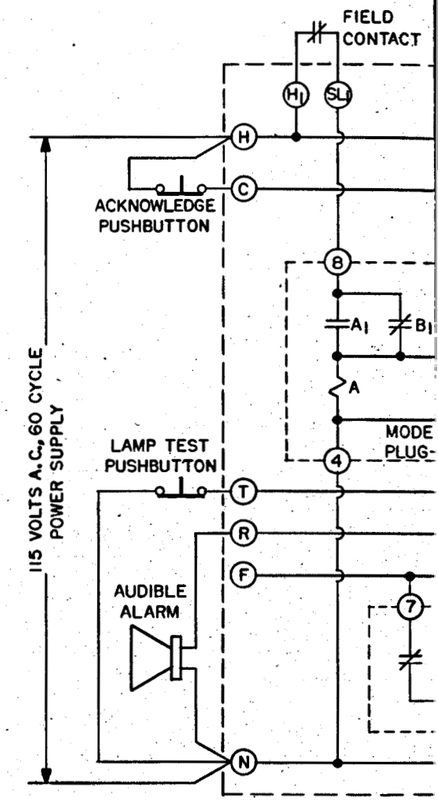


| OPE | | |
|---|---|---|
| CONDITION | NAME PLATE LIGHT | AUDIBL SIGNAL |
| NORMAL | OFF | OFF |
| ALERT | FLASHING | ON |
| OFF-NORMAL | STEADY-ON | OFF |
| NORMAL AGAIN | OFF | OFF |
| LAMP-TEST | STEADY-ON | OFF |

Fig. 4.12

ORNL DWG. 72-5584

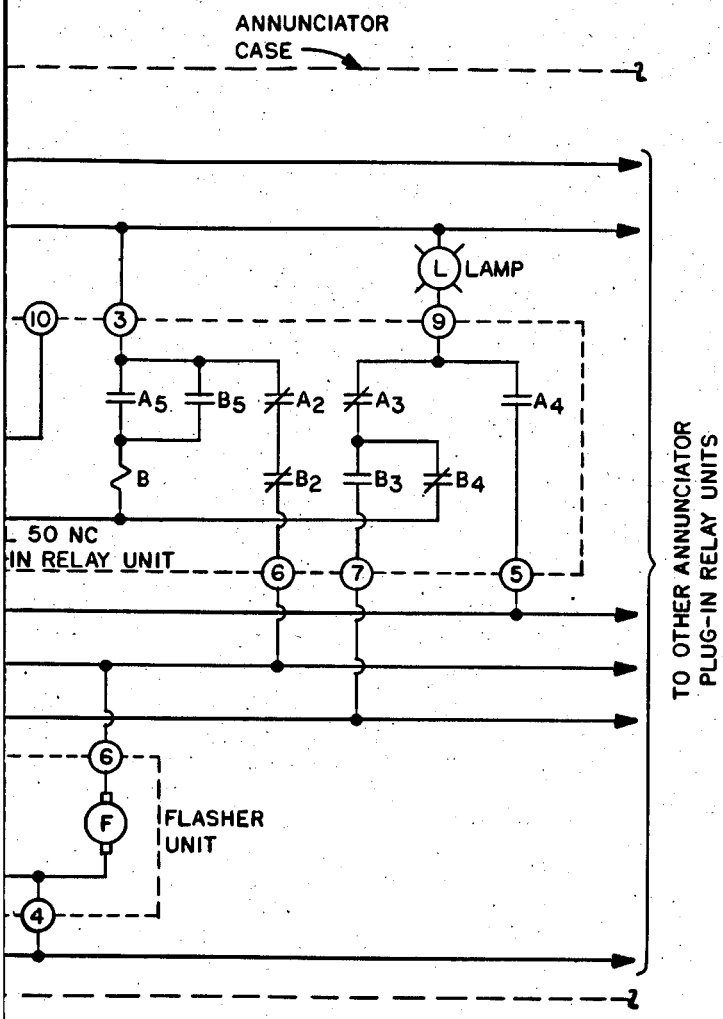


| RATIONAL SEQUENCE | | | | |
|---|---|---|---|---|
| E | "A" RELAY | | "B" RELAY | AUXILIARY CONTACT (A6) |
| | SIGNAL CONTACTS N.O. | SIGNAL CONTACTS N.C. | | |
| | DEENERGIZED | ENERGIZED | ENERGIZED | OPEN |
| | ENERGIZED | DEENERGIZED | ENERGIZED | CLOSED |
| | ENERGIZED | DEENERGIZED | DEENERGIZED | CLOSED |
| | DEENERGIZED | ENERGIZED | ENERGIZED | OPEN |
| | DEENERGIZED | ENERGIZED | ENERGIZED | OPEN |

3. Panellit, Inc., annunciator control circuit.

ORNL DWG. 72-5585

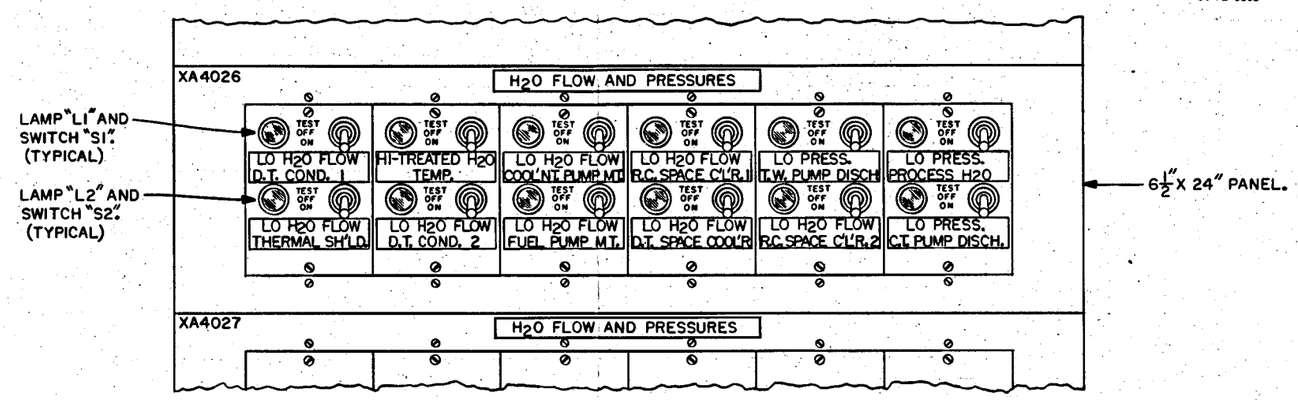


**Fig. 4.12.4. Annunciator chassis, Rochester Instrument Company model SM-110 (modified).**

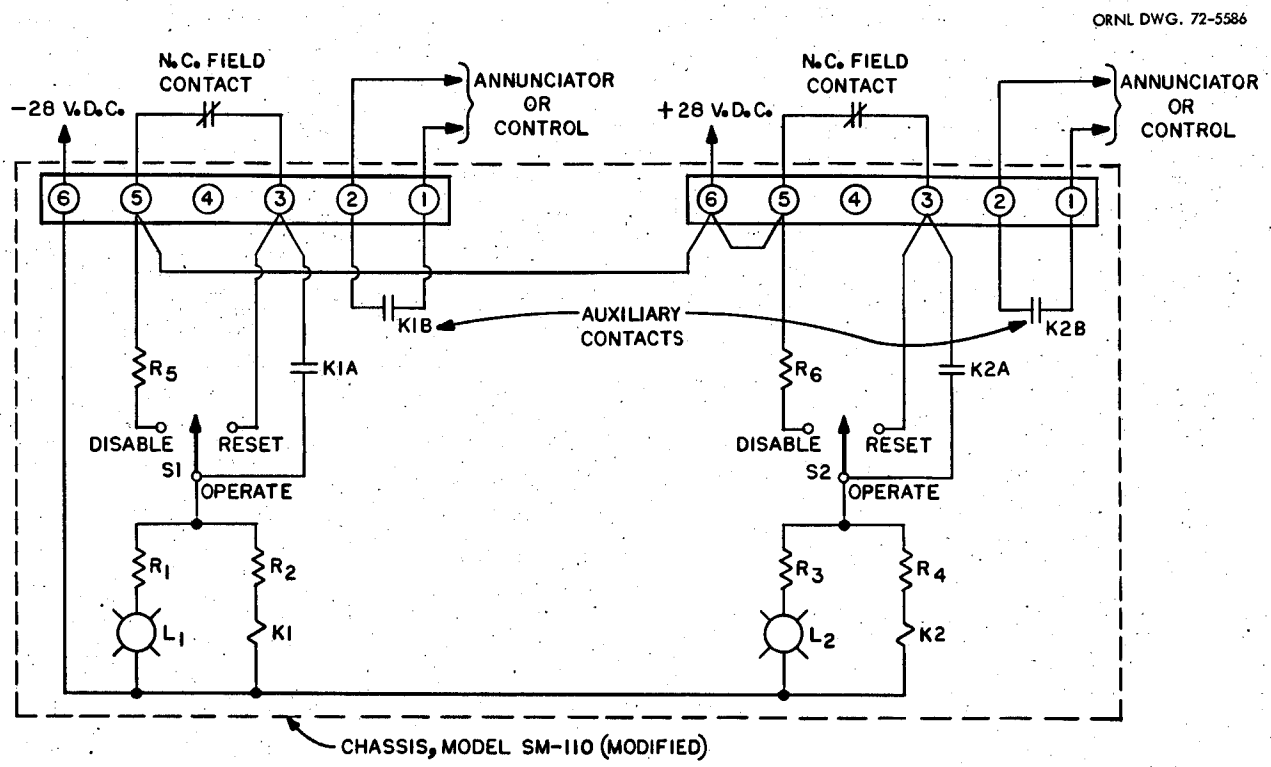


| OPERATIONAL SEQUENCE | | | | | | | |
|---|---|---|---|---|---|---|---|
| FIELD CONTACT | CLOSED | | | | OPEN | | |
| SYSTEM CONDITION | NORMAL | | | | ABNORMAL | | |
| MAN. SWITCH POSITION | OPERATE BEFORE RESET | OPERATE AFTER RESET | RESET | DISABLE | OPERATE | RESET | DISABLE |
| LAMP | OFF | BRIGHT | BRIGHT | DIM | OFF | OFF | DIM |
| AUXILIARY CONTACT | OPEN | CLOSED | CLOSED | CLOSED | OPEN | OPEN | CLOSED |

**Fig. 4.12.5. Rochester Instrument Company annunciator control circuit.**

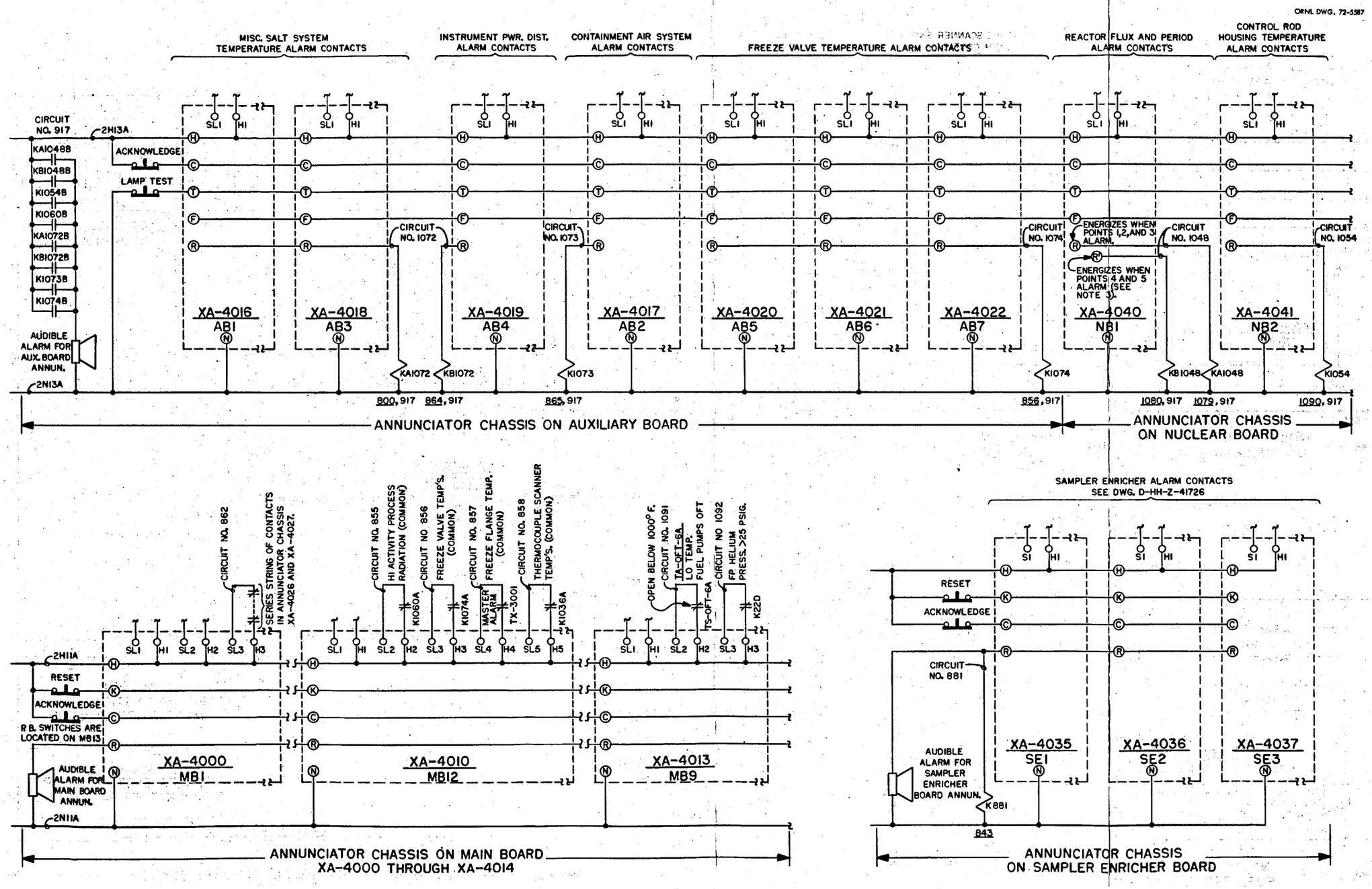


Fig. 4.12.6. MSRE annunciator system, control circuits, sheet 1 of 2.

ORNL DWG. 72-5593

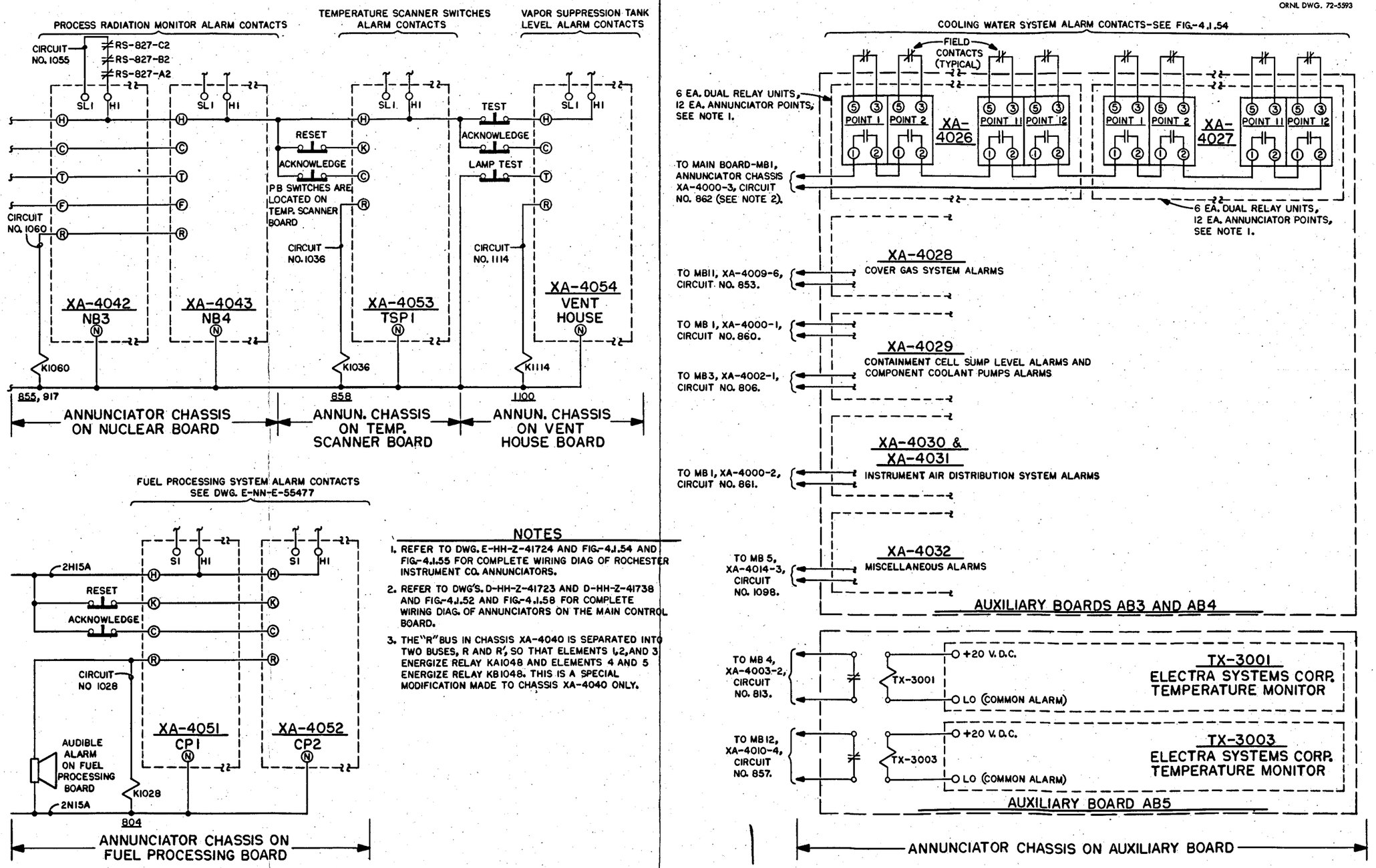


## NOTES

1. REFER TO DWG. E-HH-Z-41724 AND FIG.-4.1.54 AND FIG.-4.1.55 FOR COMPLETE WIRING DIAG OF ROCHESTER INSTRUMENT CO. ANNUNCIATORS.
2. REFER TO DWG'S. D-HH-Z-41723 AND D-HH-Z-41738 AND FIG.-4.1.52 AND FIG.-4.1.58 FOR COMPLETE WIRING DIAG. OF ANNUNCIATORS ON THE MAIN CONTROL BOARD.
3. THE "R" BUS IN CHASSIS XA-4040 IS SEPARATED INTO TWO BUSES, R AND R', SO THAT ELEMENTS 1, 2, AND 3 ENERGIZE RELAY KA1048 AND ELEMENTS 4 AND 5 ENERGIZE RELAY KB1048. THIS IS A SPECIAL MODIFICATION MADE TO CHASSIS XA-4040 ONLY.

Fig. 4.12.6. MSRE annunciator system, control circuits, sheet 2 of 2.

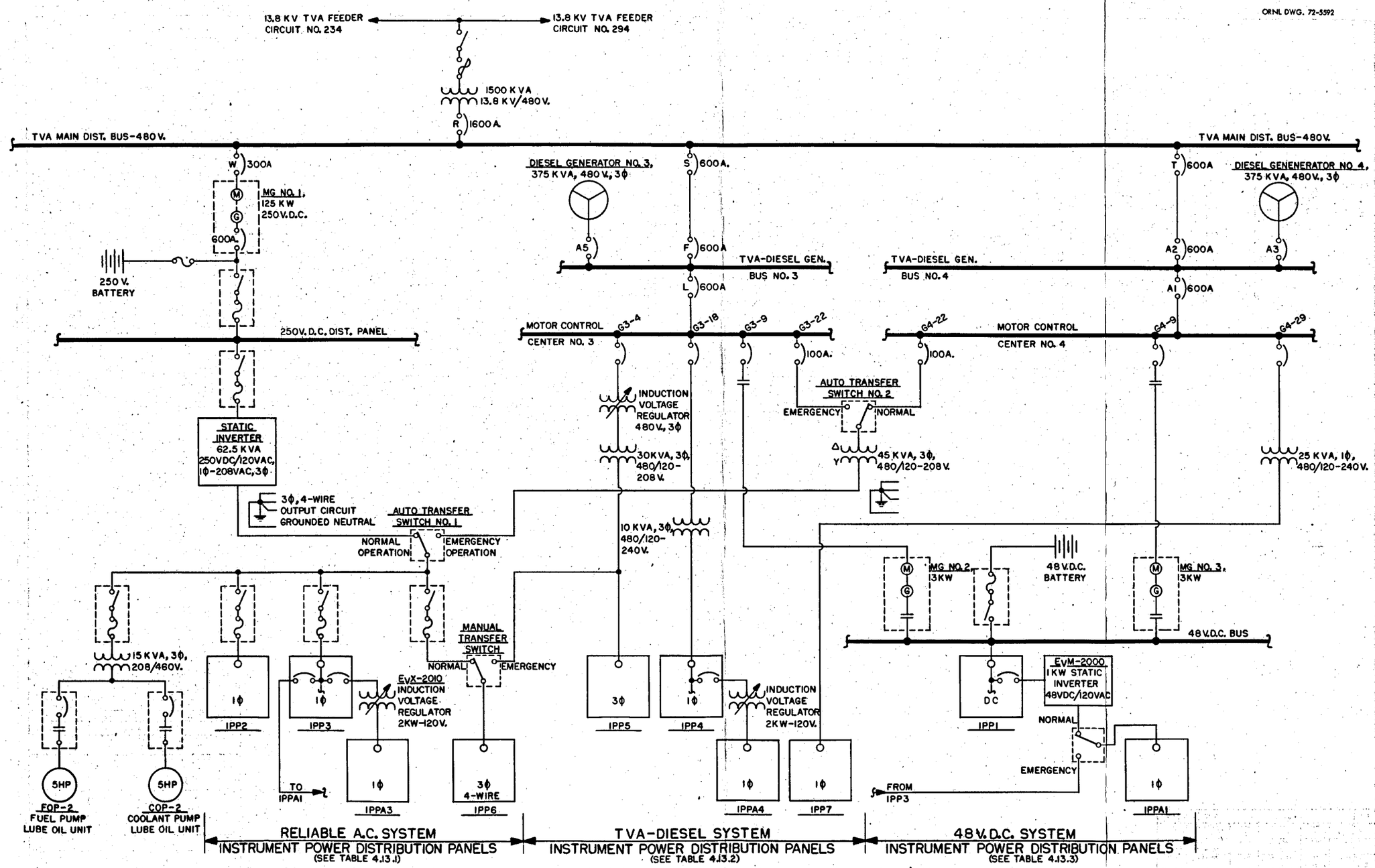


Fig. 4.13.1. MSRE instrument power distribution.

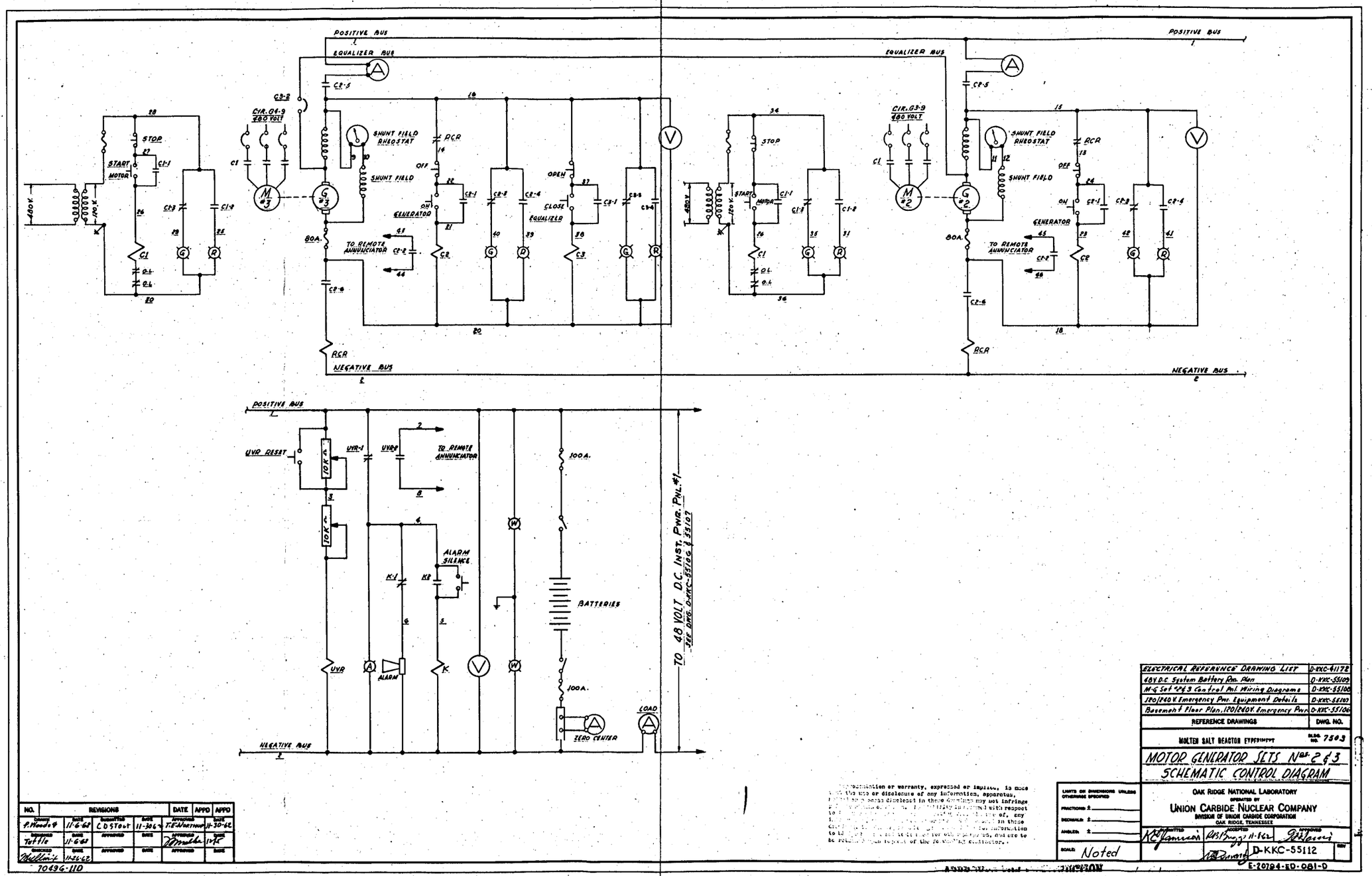


| NO. | REVISIONS | DATE | APPD | APPD |
|---|---|---|---|---|
| | | | | |

| | | | | | | | |
|---|---|---|---|---|---|---|---|
| Drawn F. Woods | 11-6-62 | Submitted C D Stout | 11-30-62 | Approved T.E. Northup | 11-30-62 | | |
| Approved Tuttle | 11-6-62 | Approved | Date | Approved | Date | | |
| Approved Mullin | 11-15-62 | Approved | Date | Approved | Date | | |

7049G-110

| ELECTRICAL REFERENCE DRAWING LIST | D-KKC-61172 |
|---|---|
| 48V D.C. System Battery Pnl. Plan | D-KKC-55109 |
| M-G Set #2 & 3 Control Pnl. Wiring Diagrams | D-KKC-55106 |
| 120/240 V. Emergency Pwr. Equipment Details | D-KKC-55107 |
| Basement Floor Plan, 120/240V. Emergency Pwr. | D-KKC-55106 |
| REFERENCE DRAWINGS | DWG. NO. |

MOLTEN SALT REACTOR EXPERIMENT — BLDG. NO. 7503

MOTOR GENERATOR SETS Nos. 2 & 3
SCHEMATIC CONTROL DIAGRAM

LIMITS OR DIMENSIONS UNLESS OTHERWISE SPECIFIED
FRACTIONS ±
DECIMALS ±
ANGLES ±
SCALE: Noted

OAK RIDGE NATIONAL LABORATORY
OPERATED BY
UNION CARBIDE NUCLEAR COMPANY
DIVISION OF UNION CARBIDE CORPORATION
OAK RIDGE, TENNESSEE

SUBMITTED K. C. Jameson | RECOMMENDED R.B. Briggs 11-6-62 | APPROVED

D-KKC-55112 | REV

E-20194-ED-081-D

Fig. 4.13.2. Instrument power distribution, single-line diagram, sheet 1 of 2.

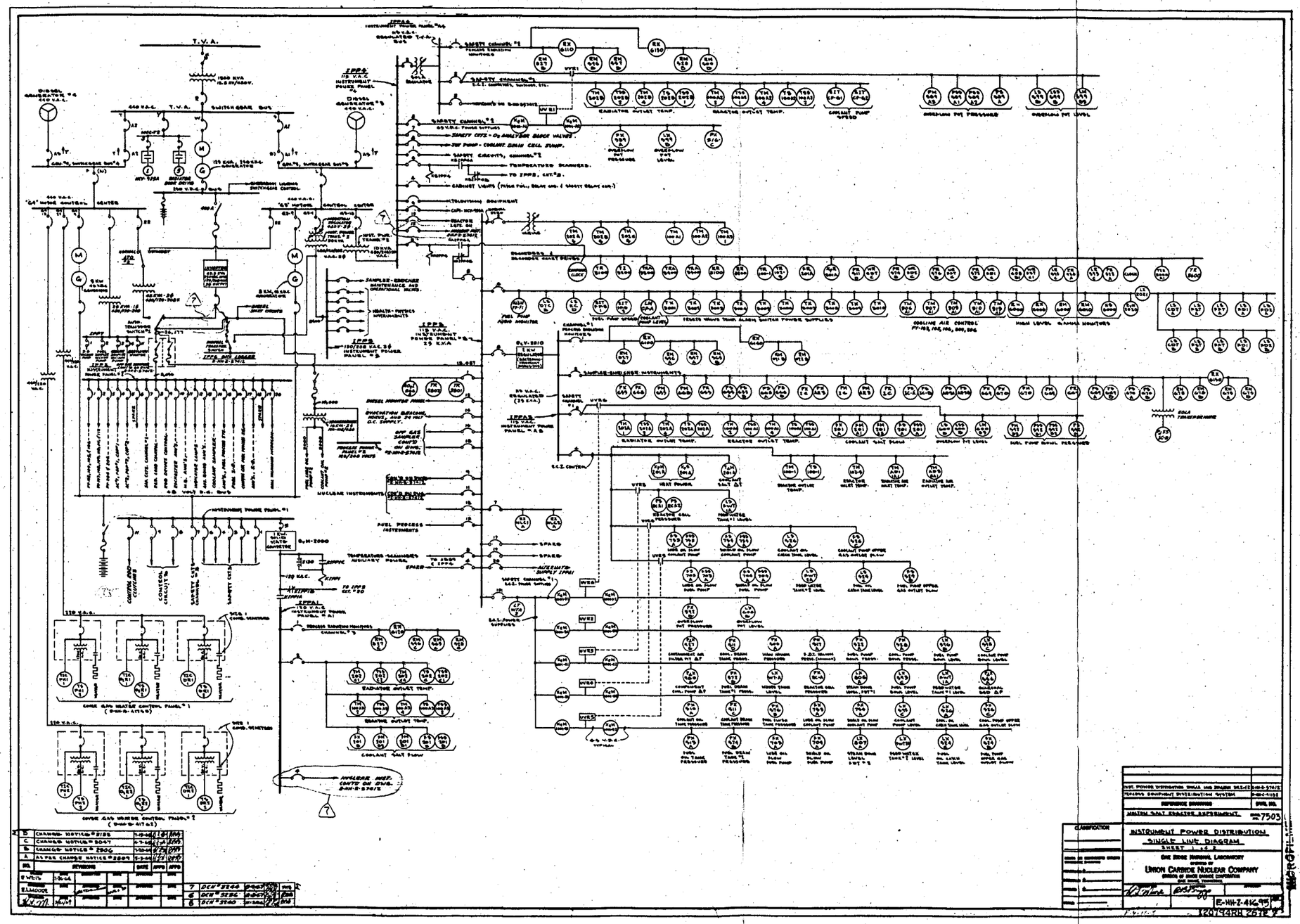


Fig. 4.13.3. Instrument power distribution, single-line diagram, sheet 2 of 2.

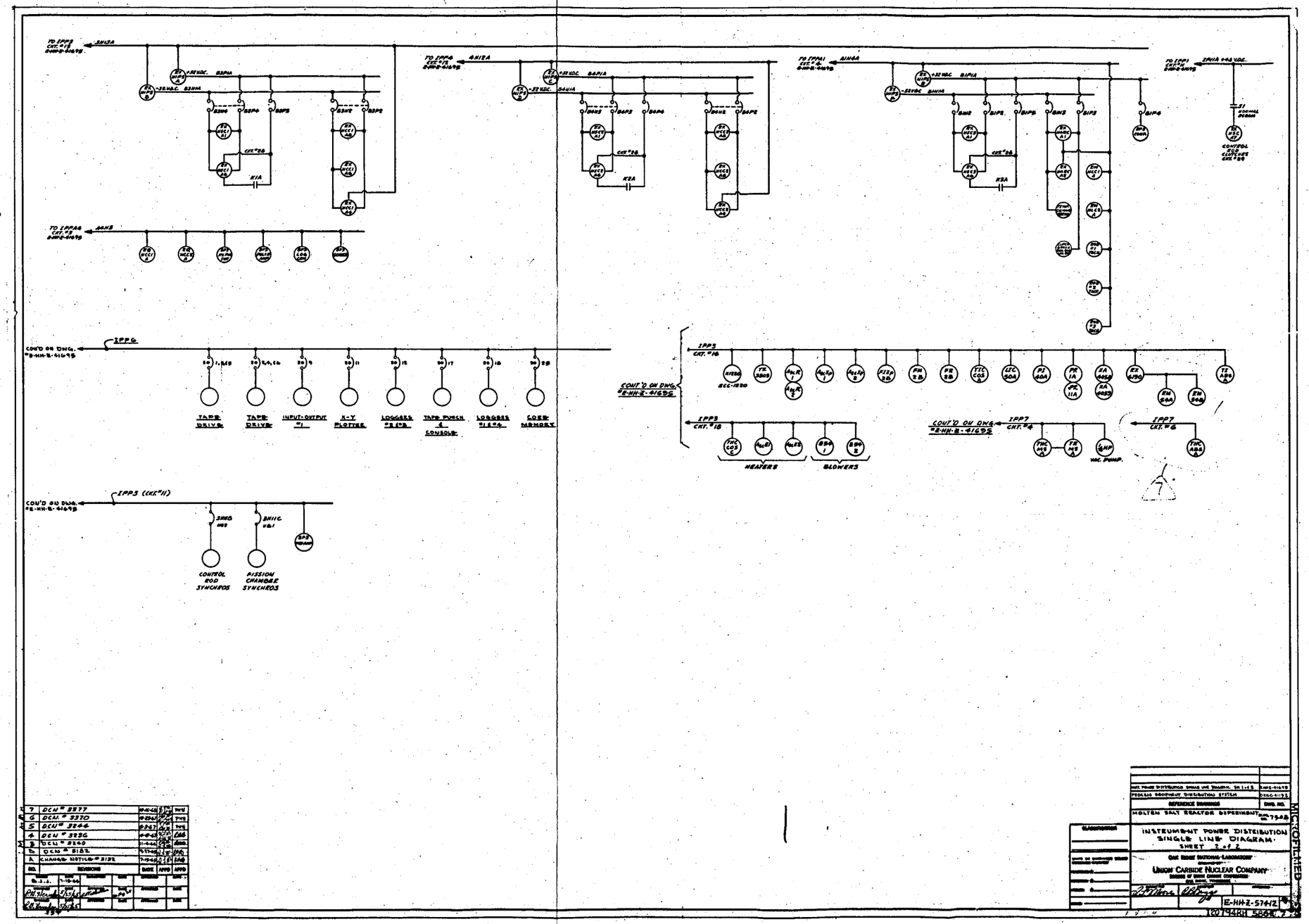


Fig. 4.13.4. Motor-generator sets nos. 2 and 3, schematic control diagram.

# 5. STANDARD PROCESS INSTRUMENTATION

R. L. Moore T. M. Cate

## 5.1 GENERAL

The MSRE process instrumentation system consists of a large number of individual components. Wherever possible, the system design was based on existing technology, and components were procured from commercial sources of supply. In most applications the requirements were such that "standard" components were suitable; however, in some applications, development of special components was necessary (see Chap. 6).

Both pneumatic and electrical components are used in the MSRE. Where transmission is electrical, the signal is 10 to 50 mA dc. Where transmission is pneumatic, the signal is 3 to 15 psig air pressure. Both types of transmission signals are industry standards. The use of electrical transmission of signals from primary elements was given preference in the design because of the relative ease of containment penetrations and because the inputs to the computer data logger are electrical voltages. However, in applications, such as the weigh system described in Chap. 6, and in some applications where the transmitter is located outside containment and the signal from the primary element is not inherently electrical, primary signals are transmitted pneumatically. In these applications, the pneumatic systems offer advantages of cost, performance, or compatibility with environmental conditions which outweigh those of the electrical systems. In most MSRE applications, electrically transmitted primary signals operate electronic receivers. Similarly, pneumatic primary signals usually operate pneumatic receivers. In some cases, however, electrical signals were converted to pneumatic, or vice versa. These conversions were made where dictated by considerations of cost or compatibility with overall system requirements. For example, strain gage pressure transducers are used to interface the pneumatic systems with the computer data logger, and electric-to-pneumatic (I/P) converters are used to operate pneumatic controllers from electric signals.

Most of the final control elements in the MSRE are pneumatically actuated valves. These valves are controlled in two ways – manually and automatically. Manual control is accomplished by means of a loading station which consists of a manually operated pressure regulator and an indicator. Automatic control is accomplished by means of a pneumatic controller.

Operation of electrical control circuit interlocks and annunciators requires the opening or closure of electrical contacts in response to variation of control signals above or below a preset value. These contact actions are generated in several types of devices. In many cases the contact action is obtained indirectly by the use of pressure switches connected to pneumatic transmission lines or from electronic switches connected to electronic transmission lines. In other cases the contact action is obtained more directly by use of pressure switches connected directly to process lines or vessels.

Some of the standard components commonly used in the MSRE are discussed below. This discussion is intended to indicate the types of components used in the MSRE and does not cover all MSRE components. For additional information on standard components used in the MSRE, refer to the MSRE instrument application tabulations and specification sheets and to the manufacturers' literature.[1–4] Considerable information on the principles and practices of process instrumentation and control is also available in open technical literature. A particularly useful source of general information and further reference is the *Process Instruments and Controls Handbook.*[5]

## 5.2 ELECTRONIC

### 5.2.1 Self-Balancing-Bridge Indicators and Recorders

**5.2.1.1 Strip-chart potentiometer recorder.** The strip-chart recorders in the MSRE are self-balancing potentiometric recorders. Figure 5.1 is a simplified diagram of the recorder circuit. In the self-balancing potentiometer, the balancing system provides both the

detecting and the balancing means. An electronic amplifier detects any unbalanced emf in the measuring circuit, amplifies it, and applies it as power to drive a balancing motor, which positions the slide-wire contactor, the recording pen or printing mechanism, and an indicating pointer. In the single-point recorders, the slide-wire contactor has an indicating pointer and ink pen attached which travels across a calibrated scale and chart, providing both continuous indication and permanent record. The chart is driven at a constant speed by an electric motor. In the multipoint recorders, the pen is replaced by a printing mechanism which is synchronized with an automatic input selector switch. As a point is selected, the recorder automatically balances. When balance is achieved, the number of the point is printed on the chart, and the selector switch and print wheel advance to the next point. Single-pen, two-pen, 12-point, 16-point, and 24-point recorders are used in the MSRE instrument system. Most of the recorders monitor temperatures measured by thermocouples, and are equipped with cold junction compensation circuitry.

**5.2.1.2 Precision potentiometric indicators.** One precision potentiometric indicator is used in the MSRE. The operating principle of the precision indicator is very similar to the strip-chart potentiometric recorders discussed in Sect. 5.2.1.1, and the circuit diagram, Fig. 5.1, in that section is equally applicable to the precision indicator. The precision indicator is equipped with a rotary scale which revolves about a fixed pointer. The active scale length of the precision indicator is 28⅝ in., thus giving much better resolution than is possible with the stri-chart recorder.

The indicator in the MSRE system has a 0 to 2000°F range with Chromel-Alumel type K thermocouples. Forty-eight points can be manually selected and read by means of a 48-point selector board. All inputs to the selector board are terminated at the thermocouple patch panel. This allows any 48 out of the more than 1000 thermocouples to be plugged into the precision indicator at any time.

**5.2.1.3 Foxboro Dynalog (ac bridge self-balancing recorder).** Figure 5.2 is a simplified diagram of a Dynalog recorder used with differential-transformer-type transmitters. The differential transformer primary is connected to a 1000-Hz voltage source in the recorder. The secondary voltage of the differential transformer is directly proportional to the position of its iron core and is applied to the recorder internal bridge at point 1. The internal bridge is connected to the 1000-Hz voltage source and is isolated from the source supplying voltage to the differential transformer. The connections to the differential transformer primary and secondary are arranged so that the output signal voltage from the differential transformer is in phase opposition to the unbalance voltage developed between point 1 and point 3 by the internal bridge. The output of the internal bridge, point 3, is connected to the unbalance voltage amplifier. As long as the voltage from point 3 to point 1 is equal in amplitude and is 180° out of phase with the voltage from point 1 to ground, the voltage from point 3 to ground will be zero. If the voltage from point 3 to ground is not zero, it can be made so by changing the position of the rotor of the variable balancing capacitor. When this condition exists, the position of the capacitor rotor indicates the position of the differential transformer core. The recording pen is linked directly to the capacitor rotor and reads the differential transformer core position. Point 3 is connected to the unbalance amplifier. Any voltage between this point and ground is first amplified and then compared in phase to a reference voltage to determine the direction of unbalance. The output of the unbalance detector is a pair of dc voltages of opposite polarity. These voltages differ in magnitude by an amount proportional to the bridge unbalance and provide the signals to the grids of the push-pull power amplifier. The output current of the push-pull power amplifier flows through the windings of the drive motor, producing a magnetic force which causes the drive rotor to move and drive the rotor of the balancing capacitor in the internal bridge. The capacitor rotor is moved to a position which unbalances the internal bridge sufficiently to develop an output which cancels the signal from the differential transformer. With both signal sources unbalanced by the same amount, an equilibrium condition is reached. The balancing action is practically instantaneous, so the equilibrium condition is established continuously, and any change in core position is recorded or indicated continuously. This type of recorder is used in the MSRE to read out the signal transmitted from the ball float level transmitter described in Sect. 6.9. It can also be used with other signal sources such as strain gages, thermocouples, and resistance thermometers. Variations of the recorder input circuitry are required for these applications; however, the basic principles of operation are the same.

### 5.2.2 Foxboro ECI System

The Foxboro ECI system refers to a family of fully electronic instruments, transmitters, recorders, indicators, controllers, and final operators – all operating with compatible current signal, and linked in a dc

transmission system. Process measurements are converted at the transmitter to a proportional dc current signal and are transmitted over unshielded lines to remotely located receivers.

A major characteristic of the system design is replacement of vacuum tubes with sturdy, yet sensitive, magnetic amplifiers and other solid state devices. This type of equipment is used extensively in the MSRE.

**5.2.2.1 ECI recorder.** The model 64 electronic recorder is a panel-mounted 4-in. strip-chart recorder. It is available as a one-pen or two-pen recorder with horizontal pen motion.

The recorder input is 10 to 50 mA dc, which is the standard transmission signal range for the Foxboro ECI current-operated system. A magnetic torque motor, which is basically a D'Arsonval meter movement, drives the pen directly from the input signal without further amplification.

The recorder is completely independent of controllers and other receiver units, all of which are connected in series with the transmitter.

**5.2.2.2 Emf-to-current converters.** The type 693 emf-to-current converter changes a dc millivolt input signal to a proportional 10- to 50-mA dc output signal. Spans from 5 to 100 dc millivolts can be handled directly; larger spans require voltage dividers. With this device, thermocouples, strain gages, or other elements producing dc millivolts can be used to operate ECI receivers such as recorders, controllers, alarm units, and various computing instruments.

The converter is an all-solid-state device making use of magnetic amplifiers, silicon diodes, tantalum and aluminum capacitors, and printed circuits. A block diagram of the converter is shown in Fig. 5.3.

Referring to the block diagram, the input millivolt signal, the feedback signal, and the bridge output are summed algebraically. The resulting signal is the input to the amplifier. The bridge provides temperature compensation where thermocouples are the measuring element and establishes the amount of zero elevation required.

The feedback ensures stable operation of the first two amplifier stages and determines the instrument span by fixing the gain of the amplifier. The output signal of the second stage is further amplified by the third and fourth stages to provide the necessary 10- to 50-mA dc output current. A separate feedback loop around the third and fourth stages provides stability of operation. A potentiometer in the feedback circuit provides a fine span adjustment of ±3% of span. A separately adjustable bias for the third stage provides a fine zero adjustment of ±3% of span. Coarse span and zero are fixed by resistors in an externally located range and zero unit. The range is easily changed by loosening six screws and replacing the unit with another.

Since there are separate feedback loops around the first two stages and the last two stages, there is electrical isolation between the input and the output. Hence, it is possible to ground either side of the input signal when desired.

A closely regulated dc voltage is obtained from a circuit using Zener diodes. This voltage provides the bias for the third amplifier stage and also provides an excitation for the bridge.

**5.2.2.3 Vertical scale indicators.** The model 65 PV indicator is a standard 10- to 50-mA dc meter designed for either vertical or horizontal mounting on either magnetic or nonmagnetic materials. It is available with the scale calibrated in a variety of units to fit nearly all process variables. The indicator has a basic accuracy of ±2% of full scale and a damping factor of 5 or more. The internal resistance of the meter is 5 Ω.

**5.2.2.4 Differential pressure transmitters.** The type 613 differential pressure transmitter measures differential pressures in the range of 0–20 to 0–250 in. $H_2O$ or from 0–200 to 0–850 in. $H_2O$. The pressure differential is detected by the transmitter and converted to a proportional 10- to 50-mA dc signal transmitted to remote ECI receivers.

Figure 5.4 shows schematically the operation of the type 613 differential pressure cell. In operation, a change in the differential pressure across the diaphragm capsule causes the force bar to pivot on the Eligiloy diaphragm, resulting in lateral movement of $A$ and $B$. For instance, if the pressure on the high side of the diaphragm increases, the force bar will pivot, moving point $A$ to the left. This causes the range rod to pivot at $C$ and thus moves the laminated core of the detector. The movement of the detector core varies the air gap of the detector, resulting in an increase in the inductive coupling in the core which increases the secondary voltage and the oscillator output, which is the amplifier input (see Fig. 5.5).

The signal from the detector is fed to the base of transmitter $Q_1$, and the amplified signal from the collector of $Q_1$ is fed back through the primary of the detector. This positive feedback results in oscillations which are regulated at approximately 1000 Hz by a tuned circuit. This variable-amplitude 1000-Hz signal is rectified and applied to the base of $Q_2$, which controls the current flow through $Q_3$. The 10- to 50-mA output signal is fed to the feedback motor in series with the load. As current in the winding of the feedback motor increases, an increase in force is developed which

repositions the laminated core of the detector. This force is simultaneous with any movement of the laminated core and is in opposition to the force exerted by the diaphragm on the lower end of the force bar. Therefore, a balance of forces always exists.

The amplifier can be located up to 500 ft away from the differential pressure transmitter when necessary but must be interconnected by a six-wire shielded cable instead of the usual two-wire unshielded signal leads.

**5.2.2.5 Pressure transmitters.** All ECI pressure transmitters used in the MSRE are the specially designed type 611TM-ASX described in Sect. 6.1. A standard type 611 is available but was not used in the MSRE. The main difference between the types 611 and 611GM-ASX is the construction of the bellows sensing element. The principle of operation of both types is the same as that of the differential pressure transmitter described in Sect. 5.2.2.4 except that force applied to the force bar is developed by the pressure difference across a bellows.

**5.2.2.6 Square root converter.** The type 66A square root converter extracts the square root of a 10- to 50-mA dc input signal and delivers it as a linear 10- to 50-mA dc output. This converter is used in several MSRE flow systems to linearize the output of the flow transmitter.

As shown by the block diagram in Fig. 5.6, the square root converter is basically a two-stage magnetic amplifier with negative feedback. A variable-resistance-diode function generator circuit in the feedback circuit of the amplifier varies the gain of the amplifier, changing the resistance in the feedback circuit in such a way that the output is a square root function of the input.

**5.2.2.7 Electronic multiplier-divider.** The type 66D electronic multiplier-divider is a solid state instrument which is designed to perform certain computing operations. The following equations can be solved by the standard instrument.

$$\frac{AB}{K} = D$$

$$\frac{AK}{B} = D$$

$$\frac{AB}{C} = D$$

$$\sqrt{AB} = D$$

$$\frac{A^2}{K} = D$$

$$K\sqrt{A} = D$$

$$\frac{A^2}{B} = D$$

The instrument receives either two or three 10- to 50-mA dc signals, depending on the application, and produces an output of 10- to 50-mA dc proportional to the solution of the equation being solved. In the above equations, $A$, $B$, and $C$ represent the input signals. These signals are 10- to 50-mA dc signals which represent such process variables as flow, temperature, and pressure as transmitted by the ECI transmitters and converters. $D$ represents the output signal and $K$ is a constant. In the MSRE the type 66D multiplier-divider is used to compute heat power from the product of coolant salt flow and radiator $\Delta T$. Two inputs are used in this application.

A simplified block diagram of the basic multiplier-divider is shown in Fig. 5.7. The diode bridge is made up of 12 diodes and 12 resistors and produces an output signal proportional to a function involving $e_1e_2/e_3$ when the bridge is excited by the sawtooth generator. The amplifier is a transistorized high-gain dc operational amplifier, which amplifies its input signal to a usable level.

**5.2.2.8 Resistance-to-current converter.** The type 694 resistance-to-current converter converts the temperature measured by a resistance temperature detector to a 10- to 50-mA dc signal which can be transmitted to other ECI receivers. The resistance-to-current converter is very similar in operation and design to the type 693 emf-to-current converter discussed in Sect. 5.2.2.2. The main difference is that, in the resistance-to-current converter, the detector element becomes a part of the bridge circuit. A Zener supply excites the bridge through a voltage divider and establishes the required instrument span. Varying the detector resistance results in a 2 to 7 dc millivolt output signal from the bridge which is algebraically summed with the feedback signal. The resultant is the input to the first amplifier stage. Operation beyond this point is identical to the emf-to-current converter.

**5.2.2.9 Alarm switch.** The model 63 ECI alarm units open or close relay contacts when a measurement signal exceeds some preset limit or limits. The alarms can be set to operate at a preset high or a preset low signal from a transmitter. The set point is adjustable over 100% of the10- to 50-mA dc input signal span. Fail-safe operation is possible where required. The alarms use all-solid-state amplifiers and Zener regulated supplies. This type of switch is used extensively in the MSRE.

Figure 5.8 is a simplified schematic of the alarm unit. The input signal current develops a voltage $V_1$ across $R_1$, which is opposed by $V_S$ from the Zener supply. The difference is modulated by the chopper so that it will be passed by the transformer, $Tx$, to the input to the amplifier. The amplifier raises the difference signal to a level that is high enough to operate the relay. Action can be reversed easily in the field by reversing diode $D_1$ and the polarity of the chopper circuit output. This is accomplished by switching two jumper wires on an alarm circuit card.

**5.2.2.10 Current-to-pneumatic converter.** The type 69TQ current-to-pneumatic converter is used in the MSRE to convert 10- to 50-mA dc electrical signals to proportional 3- to 15-psi pneumatic signals.

Figure 5.9 is a schematic representation of the type 69TA converter. In operation, the 10- to 50-mA current signal is applied to a coil which is wrapped around the armature. The strength of the magnetic flux produced by the coil is proportional to the current.

With an increase in current through the coil, the armature north and south poles become stronger and react with greater force against the poles of the permanent magnet. The south pole tends to move up and the north pole down. The south pole has a greater moment about the pivot, so the net moment is clockwise.

This clockwise movement causes the nozzle to be covered. This increases the pneumatic output and increases the pressure in the feedback bellows. The force exerted by the feedback bellows increases until it balances the force caused by the increase in signal current. Reduction of input current results in the opposite sequence of events. Therefore, during static conditions, a balance of forces always exists, and the pneumatic output is proportional to the current input.

**5.2.2.11 General features of ECI system.** All transmitters, receivers, and operators in the ECI system are calibrated to a common signal of 10 to 50 mA direct current. Load value for one or a combination of several receivers is fixed at 600 Ω ±10%. All receivers must be connected in series.

All panel-mounted ECI instruments are mounted by means of a separately mounted housing. Connection of the instrument to the housing is accomplished by plugging into a receptacle at the end of a stretch-out cord, which in turn is connected to a terminal strip at the rear of the housing. This allows partial or complete withdrawal of the instrument from the front of the panel.

An automatic interlock removes power from the instrument before it can be unplugged. Most ECI instruments are designed so that removal of the instrument from its housing will not disrupt operation by breaking continuity of the 600-Ω series loop.

## 5.3 PNEUMATIC

### 5.3.1 Pneumatic Receivers and Modifiers

**5.3.1.1 Receiver gages.** Receiver gages are special-purpose Bourdon- or bellows-type pressure gages which are manufactured and calibrated to read zero with 3 psig applied and to read full scale with 15 psig applied. The scales on receiver gages can be chosen to read linearly from 0 to 100% of full scale or can be calibrated to read directly in engineering units. Receiver gages are commonly used with nonindicating-type pneumatic transmitters for indication at the point of measurement or as a repeater to indicate the measurement at some remote location.

**5.3.1.2 Model 50 pneumatic ribbon indicator.** The model 50 ribbon-type indicator is basically a pneumatic bellows-type receiver that is operated by a 3- to 15-psi pneumatic signal. The visible indication is a red-and-white nylon ribbon appearing in back of a glass scale. This type of indicator was particularly useful in the MSRE main board graphic display.

**5.3.1.3 Foxboro model 54 pneumatic recorder.** The model 54 pneumatic recorder, shown in Fig. 5.10, receives standard 3- to 15-psig pneumatic signals from any pneumatic transmitter and makes a permanent record of this signal in ink on a 4-in.-wide paper chart. Two types of recorders are used in the MSRE instrument system. One type is for recording and/or indication only. The other type is for recording and/or indication also, but in addition serves as the control station for a process controller (see Sect. 5.3.2.3).

The difference between the two types is the addition of a set-point transmitter, a valve position or output pressure indicator, and a connection manifold assembly for a controller to the units required to control a process variable. The diagram in Fig. 5.10 shows a typical recorder control station with set-point transmitter. In operation the signal is applied to the receiver bellows, which works against a flexure-pivoted arm. Changes in the measurement air pressure move the bellows against this arm. This motion is transmitted through the linkage to the recording pen or indicating pointer. Zero and span adjustments are determined by springs. A tapered shank resistance is located in the input signal line of the input bellows and can be used to dampen pulsating pressures due to extraneous influences on the measuring device. The set-point transmit-

ter is basically a pressure regulator which produces a 3- to 15-psig reference pressure determined by the position of the set-point lever (knurled wheel). The M54 design is such that it can be easily removed from a panel for recalibration, replacement, or repair without disturbing the piping or process. The recorder housing is permanently connected to the instrument panel.

**5.3.1.4 Multifunction pneumatic relays.** The Moore Products Company multifunction relay is a pneumatic computing device which allows functions such as addition, subtraction, integration, and differentiation to be performed on one or more pneumatic signals. Figure 5.11 shows details of one configuration of the multifunction relay along with connection diagrams and equations for three typical applications. In the equations, $K$ is the suppression, and $A$, $B$, $C$, and $D$ are the pressure chambers. The multifunction relay is not limited to the configurations shown in the illustration. Moore Products Company Bulletin No. AD-68 shows diagrams of 50 of the most frequently used configurations and states that more than 1000 different combinations of the assembly are possible.

**5.3.1.5 Strain-gage-type pressure transducer.** In several instances in the MSRE system it was desired to log process variables whose primary measuring device transmitted a pneumatic signal. In these cases a Statham model IPG60-15-350 unbonded strain gage pressure transducer was utilized to generate a precise electrical analog of the pneumatic signal. Construction details of the transducer are shown in Fig. 5.12. Figure 5.13 is a schematic diagram of the transducer electrical circuit. The force produced be applying pressure to the bellows stresses four strain gages arranged in a balanced Wheatstone bridge which provides a stepless output and an ultimate resolution limited only by the characteristics of the receiver. As seen in the schematic, Fig. 5.13, an integral zero and span adjustment is provided which allows field calibration and precise matching of several transducers. Maximum excitation for the transducer is 14 V dc or ac (rms). The transducer output is approximately 2.5 mV dc per volt of excitation with full range pressure applied.

**5.3.1.6 Pressure switches.** In many cases in the MSRE system an electrical contact opening or closure is required for operation of alarms and interlocks when a pneumatic signal pressure varies above or below a preset value. Pressure switches are used for this purpose. The switch most frequently used in the MSRE is the Minneapolis-Honeywell type LR404H1027. This switch has a set point adjustable from 0 to 15 psi and a fixed differential of 0.2 psi. Contacts in the switch are rated for 2.6 A at 120 V or 1.3 A at 240 V.

### 5.3.2 Transmitters and Controllers

**5.3.2.1 Foxboro type 13A and type 15A differential pressure transmitters.** The Foxboro type 13A and type 15A differential pressure transmitters are differential pressure measuring devices operating on the force balance principle. The two types can be discussed simultaneously because in principle of operation they are identical. The only differences between the two types are the sensing elements and body design and the range of differential pressures which they can measure. Schematic diagrams of a type 13A transmitter are shown in Fig. 5.14. Referring to Fig. 5.14, the operation of the 13A is as follows. Process pressures are applied to opposite sides of a twin-diaphragm capsule ($F$) through the high- and low-pressure connections ($M$). Any resulting differential pressure exerts a force on the twin-diaphragm capsule, which is rigidly connected to the force bar ($C$) by the flexure $E$. The Elgiloy diaphragm $D$ acts as a seal and as a fulcrum for the force bar. The force bar transmits a force, which is exactly proportional to the differential pressure on the sensing capsule, by means of the flexure $B$ to the range bar ($H$), causing the range bar to pivot about the range wheel ($J$).

Any motion of the range bar is detected by the flapper ($A$), thereby producing a flapper-nozzle relationship which establishes, from relay $K$, an output pressure which is the transmitted pneumatic signal. The output pressure is simultaneously transmitted to the feedback bellows ($G$). The force exerted by the feedback bellows is exactly proportional to the force applied to the range bar ($H$) by the force bar ($C$). Since the force exerted by the force bar is exactly proportional to the differential pressure, the pressure in the feedback bellows and to the output is exactly proportional to the differential pressure. In operation the motion of the range bar is continuously adjusting the flapper-nozzle relationship to maintain a balance of forces between the forces exerted by the feedback bellows and by the force bar.

Type 13A and type 15A differential pressure transmitters are used in several flow and level measuring applications in the MSRE system.

**5.3.2.2 Foxboro Company model 52 controller.** The model 52A Consotrol controller is an indicating receiver-controller designed to occupy a minimum of panel space. The air circuits for the Consotrol controller are divided between an upper and lower unit, interconnected by flexible air connections. The upper unit contains the measurement receiver bellows with its indicating scale and the control unit with its setting

adjustments. The lower unit contains the relay, nozzle bleeds, manual control parts, and transfer switch.

Figure 5.15*A* is a schematic of a controller employing a proportional action control circuit. Control units having proportional plus reset action or proportional plus reset and derivative action may also be employed (see Figs. 5.15*B* and 5.15*C*).

Referring to Fig. 5.15*A*, the receiver line is connected to the upper unit, and the measurement is read on the main scale. The flapper of the flapper nozzle assembly is automatically positioned by the resultant of the motions of the receiver bellows, index setting knob, and the proportional bellows of the control unit. The resulting nozzle pressure is conveyed by flexible tubing to the lower unit.

Air supply enters the controller through the lower unit, and the flow to the nozzle is restricted by a reducing tube in this unit.

In automatic operation, the transfer switch is in the position shown in Fig. 5.15*A*, thus placing nozzle pressure on the diaphragm of the control relay. The control relay acts as a high-gain power amplifier and also eliminates loading effects on the nozzle, thus increasing overall system gain and response. The output of the relay is connected to the final control element. The output is also indicated on the output pressure indicator, and is conveyed to the proportioning bellows of the control unit by tubing between the lower and upper units. The pressure in the proportioning bellows produces a force which causes the flapper nozzle assembly to move to a position which maintains the output pressure at a value proportional to the deviation between the measurement and the set point. When reset action is added, as shown in Fig. 5.15*B*, the output pressure is also conveyed to a reset bellows via a restrictor and capacity tank. When pressure is applied to the reset bellows, a force is produced which opposes the force produced in the proportioning bellows. Buildup of pressure in the reset bellows (and of the resultant force) is delayed by the action of the restrictor and capacity tank. The net effect of the reset circuit is to increase the low-frequency gain of the controller, with the result that the controller produces a greater corrective action for slow (low-frequency) changes in the measurement signal than for fast (high-frequency) changes. In most cases the practical result of reset action is to eliminate the offset effect present in proportional controllers and cause the controller to control on the set point instead of at some point above or below the set point. In some cases, reset action can be used to increase system stability; however, in most systems the presence of the reset action will reduce the low-frequency stability of the system, and improper use of the reset function can result in uncontrolled oscillations.

When derivative action is added, as shown in Fig. 5.15*C*, the high-frequency gain of the controller is increased. This action is accomplished by delaying the buildup of pressure in a portion of the proportioning bellows with a restrictor and capacity tank assembly. The net effect of the addition of the derivative circuit is that the controller produces a greater corrective action for fast changes in the measurement signal than for slow changes. Derivative action is used mainly to speed up the response of slow systems but is sometimes useful in improving system stability. The use of derivative action is not recommended in systems where a high-frequency noise is present on the measurement signal.

For manual operation, the transfer switch is swung to the "manual" position. This removes the "automatic" nozzle pressure from the relay diaphragm and substitutes the pressure at the "manual" nozzle. The pressure at this nozzle can be manually varied by the manual control knob, thus changing the pressure on the relay diaphragm and, in turn, the output pressure.

The transfer indicator is used to facilitate smooth transfer between manual and automatic control or vice versa. The "automatic" nozzle is always connected to the upper bellows of the transfer indicator, and the "manual" nozzle is connected to the lower bellows. When the nozzle pressures are equal, as indicated by the balanced position of the transfer indicator, control may be transferred with no upset or change of output pressure.

The lower unit may be used to maintain the process on manual control in event the upper unit is removed for any reason. A ball check automatically closes the output port to prevent the escape of air when the flexible tubing is removed.

Model 52 controllers are used in several applications in the MSRE to automatically control process variables such as level and pressure. For a complete explanation of the control functions, proportional, reset, and derivative, the reader is referred to Chap. 9 of the *Process Instruments and Controls Handbook.*[5]

**5.3.2.3 Foxboro Company model 58 controller.** The Foxboro Company model 58 controller is a small, compact automatic pneumatic process controller designed to mount on the rear of a model 53 or 54 recorder or field mount by means of a field mounting adapter plate. Model 58 controllers are used in both ways in the MSRE system to control such variables as pressure, flow, and temperature. The model 58 is available in proportional only, proportional with reset,

and proportional with reset and derivative versions. A schematic of a three-term version of the model 58 is shown in Fig. 5.16 for duscussion purposes.

The model 58 Consotrol controller operates on the force-balance principle. The "floating disk" acts as the flapper of a conventional flapper-nozzle system. The resultant of the forces due to the upward pressure of the bellows units determines the position of the floating disk in relation to the nozzle. Hence, the relay output pressure varies with changes in pressure in any of these bellows.

A change in pressure in the measurement or set bellows moves that side of the floating disk up or down and causes a change in nozzle pressure which results in an increased or decreased output pressure from the control relay. This variance in output pressure acts to reposition the control valve, thus bringing about a change in the measurement bellows. It is also fed back to the proportioning bellows. This continues until a balance of forces is restored against the floating disk. Thus, changes in output pressure are proportional to changes in measurement or set pressure.

Changes in the output pressure are fed to the reset bellows, as well as to the proportioning bellows, but at a rate depending upon the setting of the reset restriction or resistance. This resetting action continues until the pressures in the proportioning and reset bellows are equal. However, this action occurs at an ever-decreasing rate as the final balance point is reached, at which time the measurement and set pressures are equal. Thus, reset action is dependent on the deviation of the measurement from the control set point and the setting of the reset restriction.

A derivative effect is obtained by interposing a derivative resistance in the feedback line between the output and the proportioning bellows. Thus, air flowing to or from the proportioning bellows due to changes in the measurement or set pressure causes a pressure drop to occur across the derivative restriction. Pressure in the output line is greater or less than that in the proportioning bellows by the amount of this drop. Hence, the position of the final control element is determined by the combined proportional and reset effect plus or minus the derivative effect, and its position will thus be reached more quickly when derivative action exists.

A small bellows extending into the derivative capacity tank is provided on controllers with derivative action. It is connected directly to the controller output and ensures stability when sudden process upsets occur.

### 5.3.3 Final Control Elements

With a few exceptions, all pneumatically operated final control elements in the MSRE are bellows- or diaphragm-actuated control valves. The special weld-sealed valves used in the MSRE are described in Sect. 6.5. Other MSRE valves are similar in operation to those described in Sect. 6.5, but differ in body construction, material of construction, and flow characteristics.

Pneumatic signals are also used to position devices such as Variacs (variable transformers). In these applications, positioning is accomplished by pneumatic actuators similar to those used to position control valves.

## REFERENCES

1. *MSRE Instrument Application Tabulation*, ORNL-CF-65-12-49 (not available for external distribution).

2. *MSRE Instrument Specifications*, ORNL-CF-12-14 (not available for external distribution).

3. *MSRE Fuel Processing Facility Instrument Application Tabulation*, ORNL-CF-65-9-69 (not available for external distribution).

4. *MSRE Sampler-Enricher System Instrument Application Tabulation*, ORNL-CF-65-10-53 (not available for external distribution).

5. Considine et al., *Process Instrument and Controls Handbook* published by McGraw-Hill Book Co., Inc.

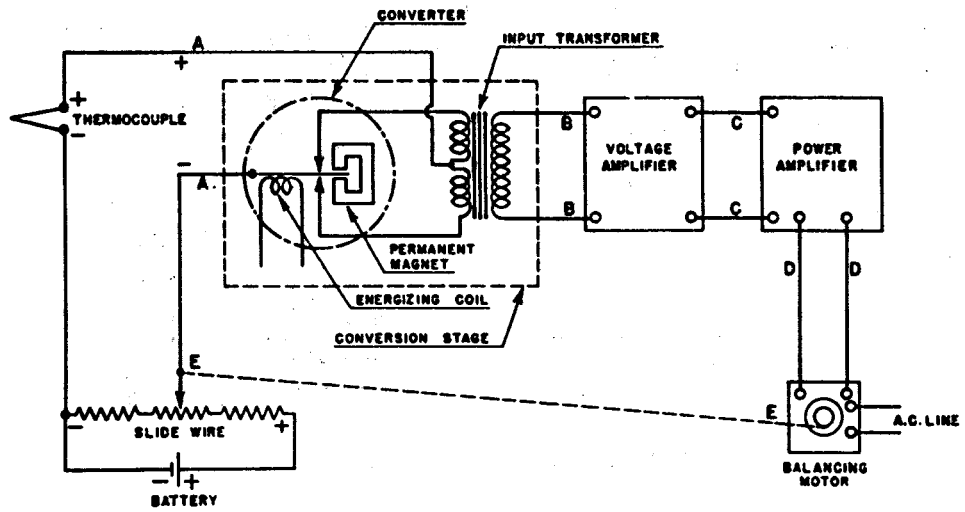


Fig. 5.1. Schematic diagram of Brown continuous balance system.

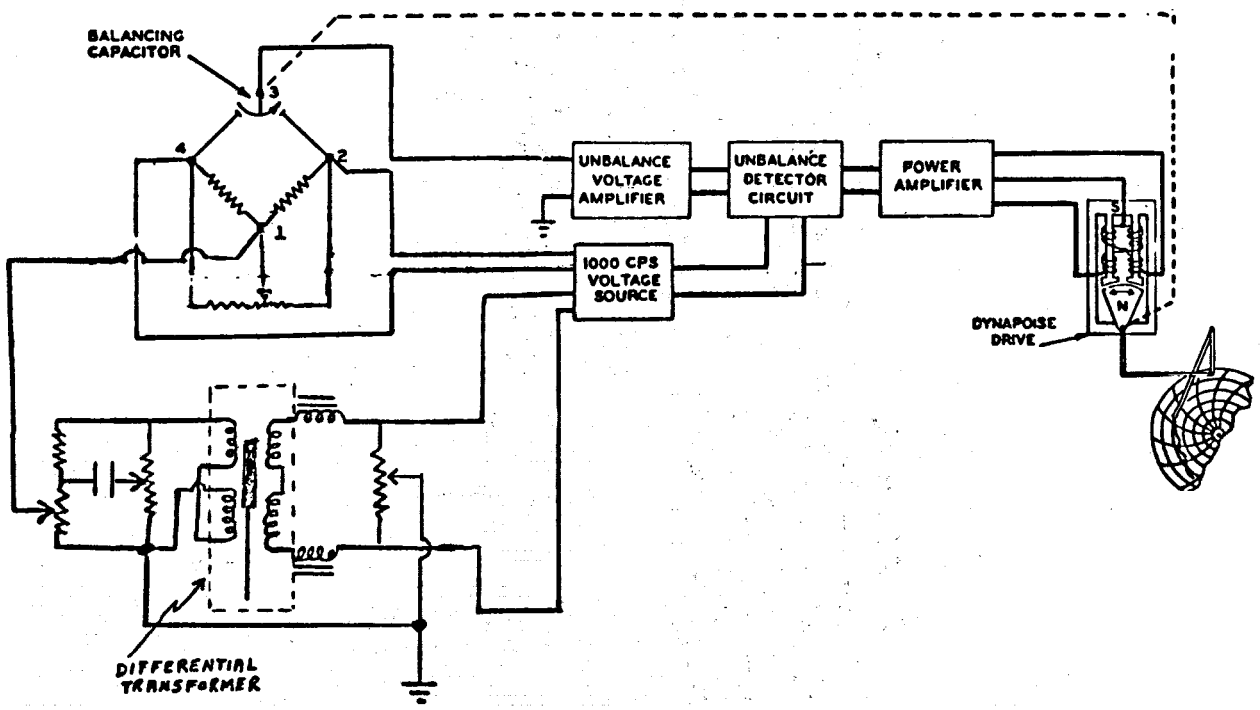


Fig. 5.2. Simplified diagram of Foxboro Dynalog recorder.

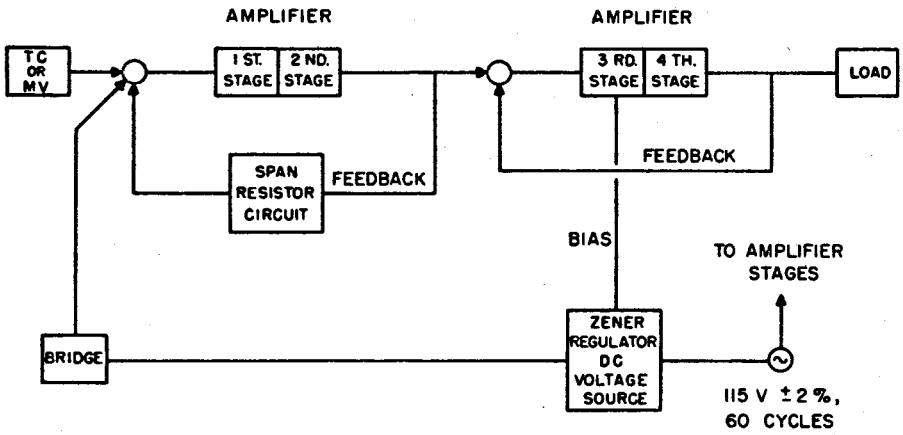


Fig. 5.3. Block diagram – emf-to-current converter.

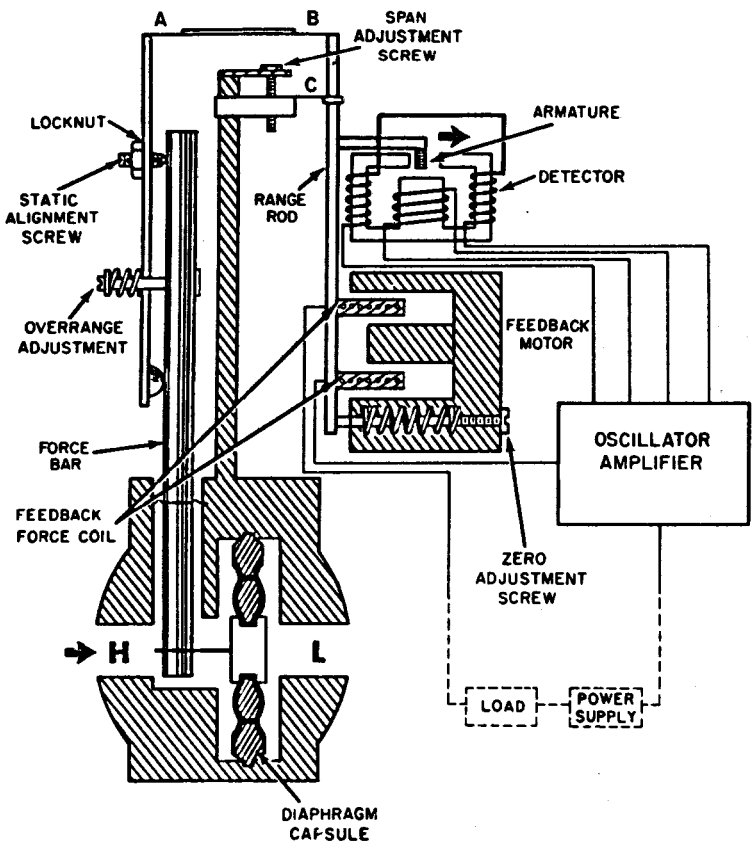


Fig. 5.4. System schematic and body assembly, type 613 differential pressure transmitter.

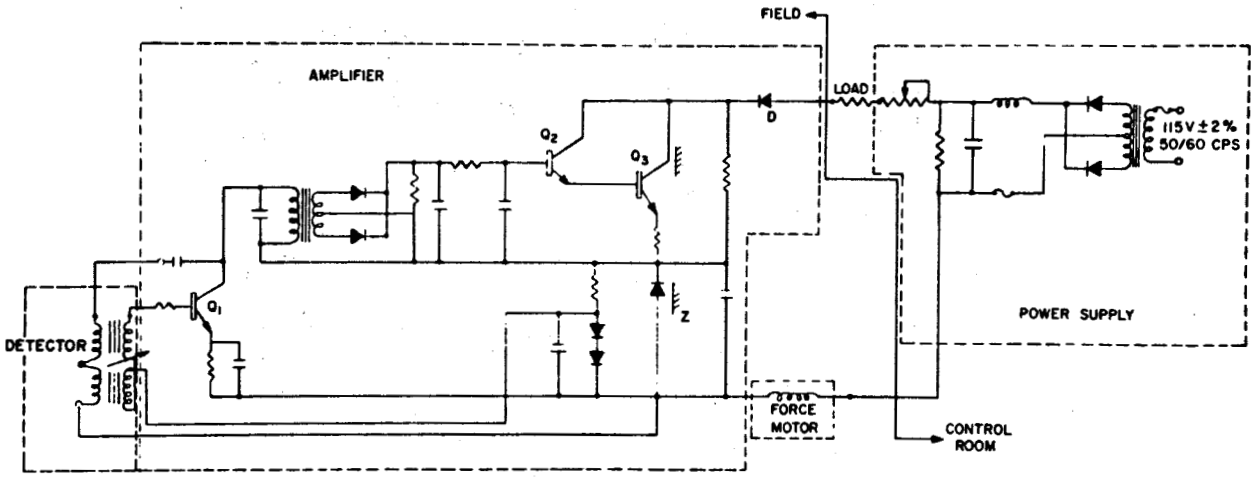


Fig. 5.5. Amplifier schematic, type 613 differential pressure transmitter.

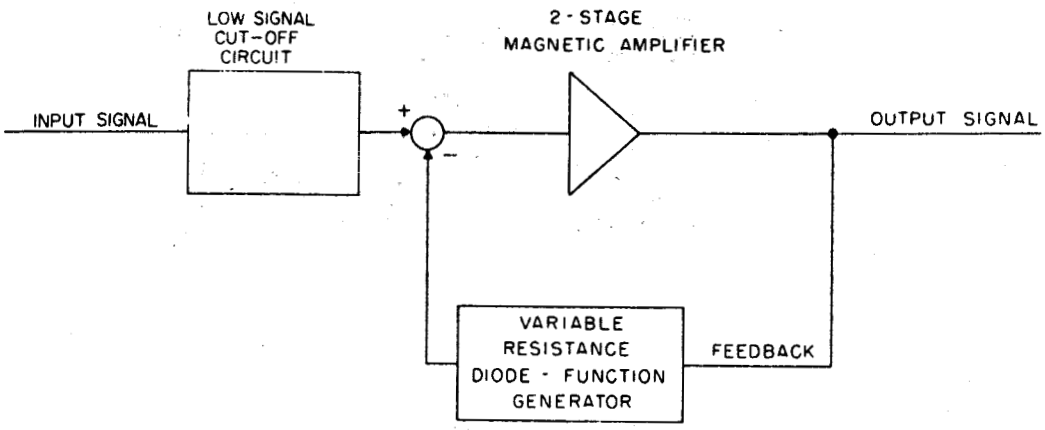


Fig. 5.6. Block diagram, square root converter.

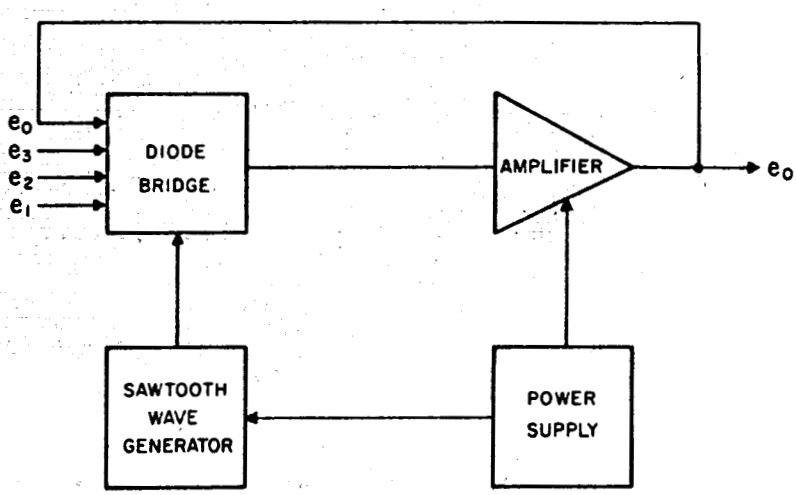


Fig. 5.7. Block diagram, multiplier-divider.

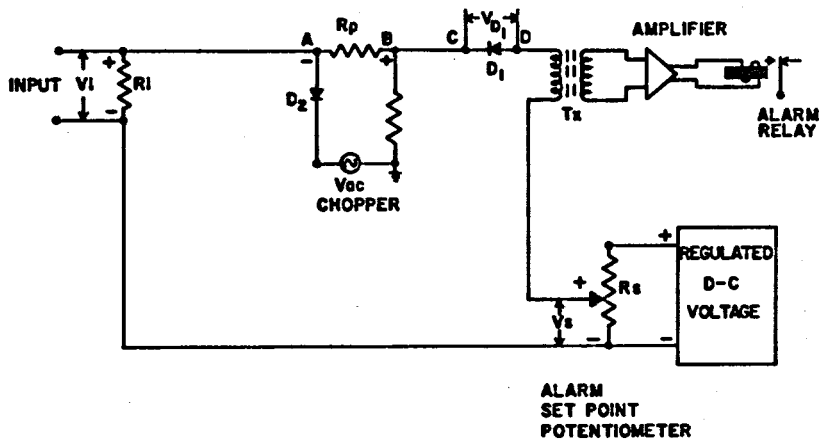


Fig. 5.8. Simplified schematic, alarm unit.

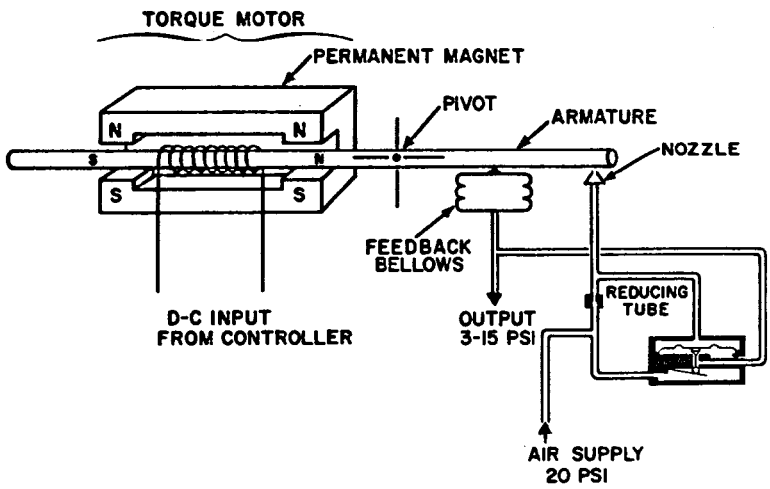


Fig. 5.9. Schematic diagram, current-to-pneumatic converter.

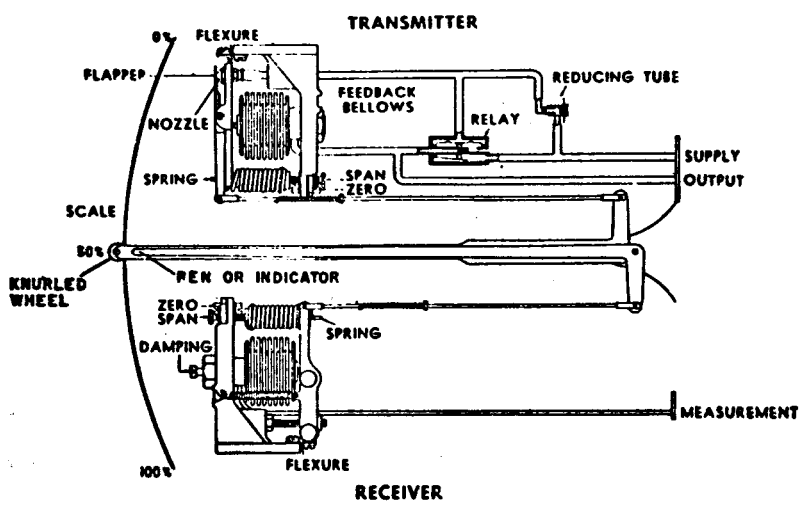


Fig. 5.10. System schematic of model M54 pneumatic recorder.

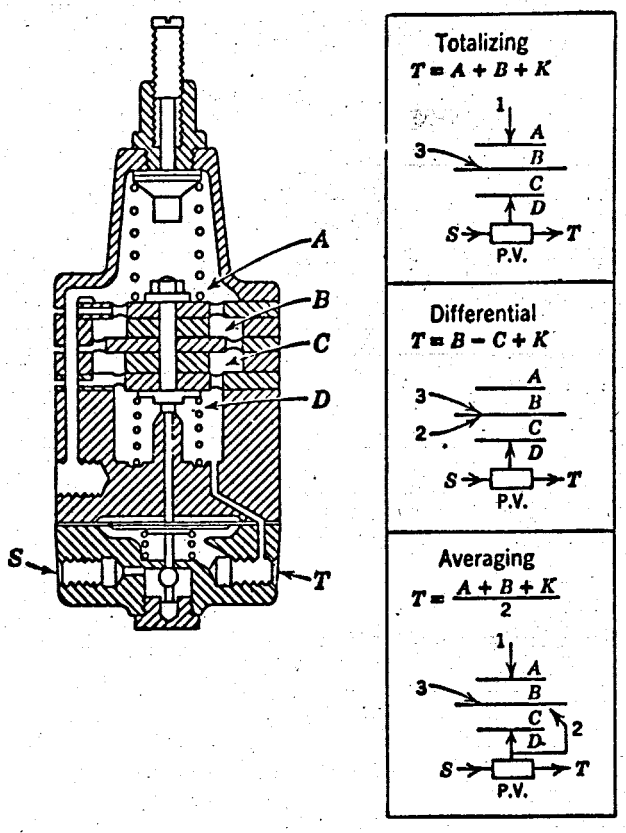


Fig. 5.11. Schematic of type M/F multifunction computing relay.

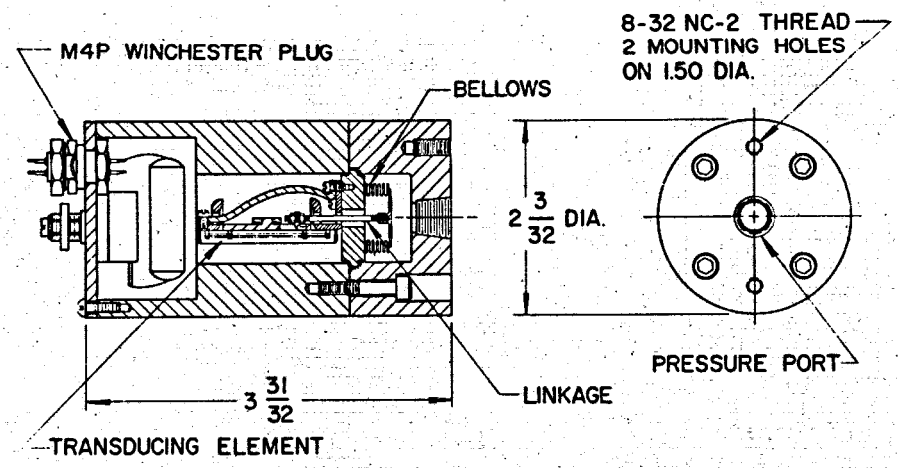


Fig. 5.12. Construction details of type IPG60-15-350 pressure transducer.

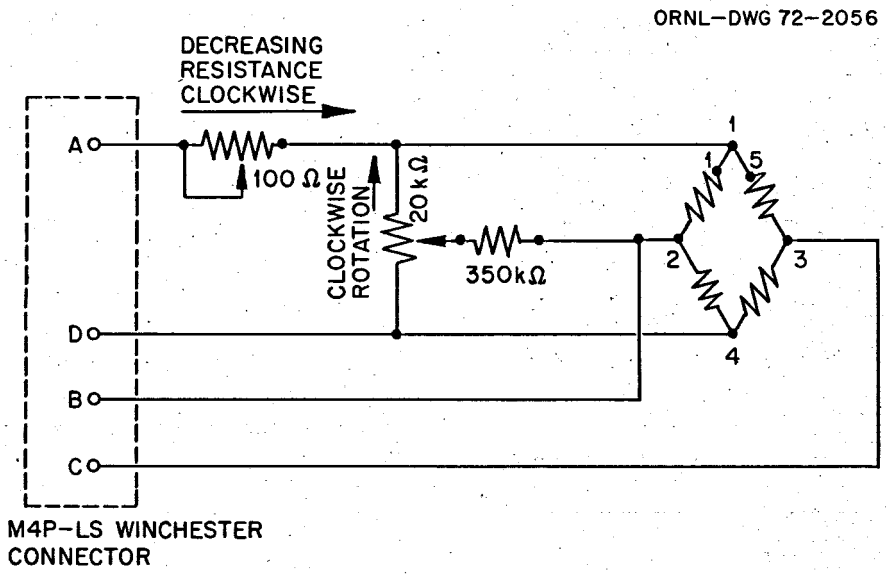


Fig. 5.13. Schematic diagram of IPG60-15-350 pressure transducer.

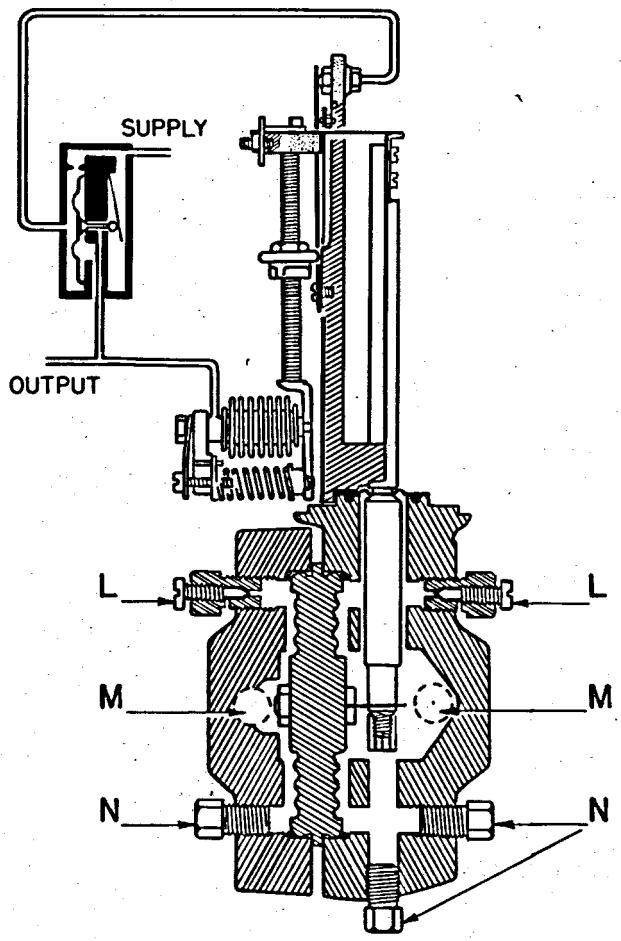


Fig. 5.14. Schematic diagram and body assembly of type 13A differential pressure transmitter.

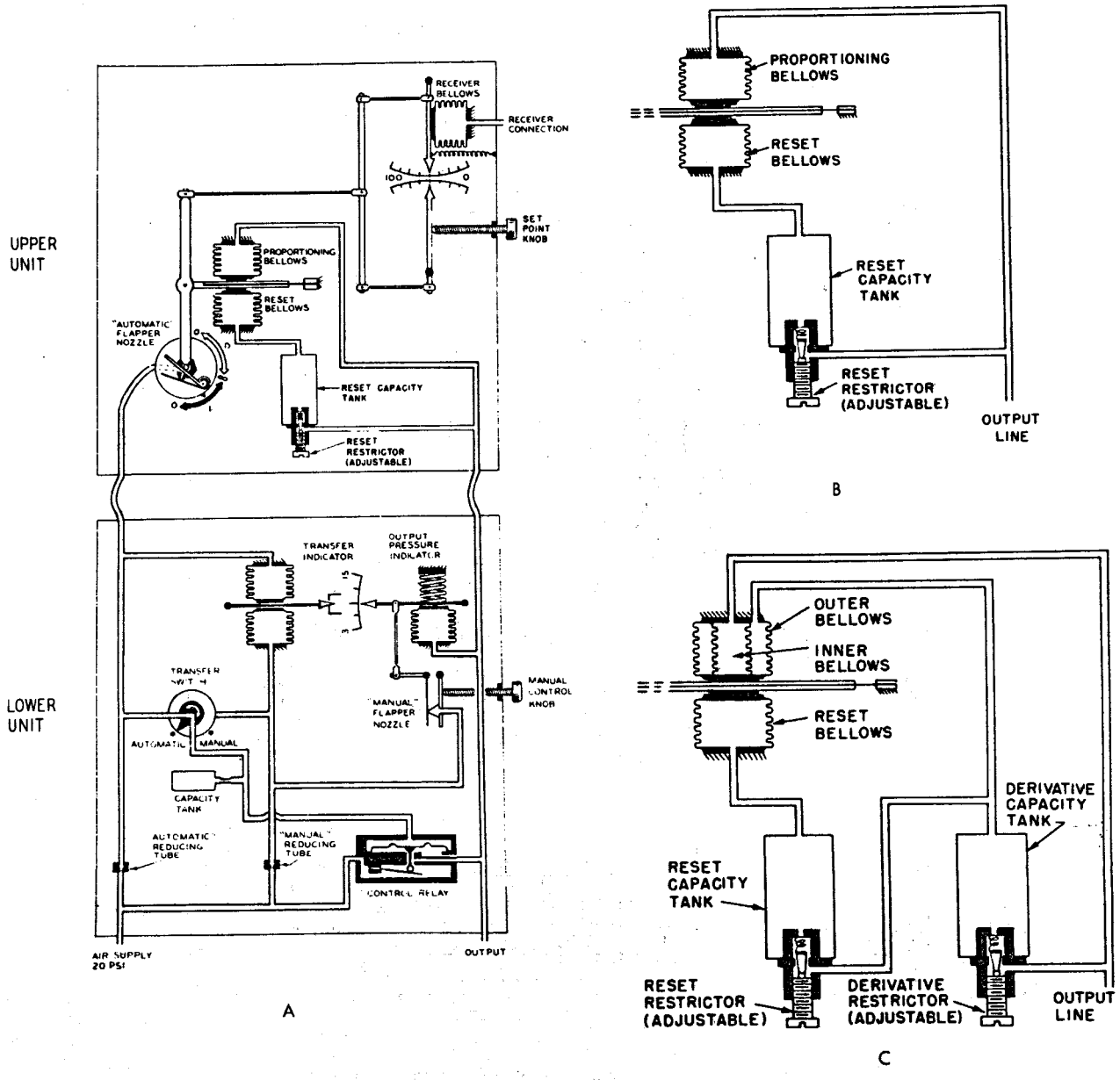


**Fig. 5.15. Schematic diagram of type M52A pneumatic controller.**

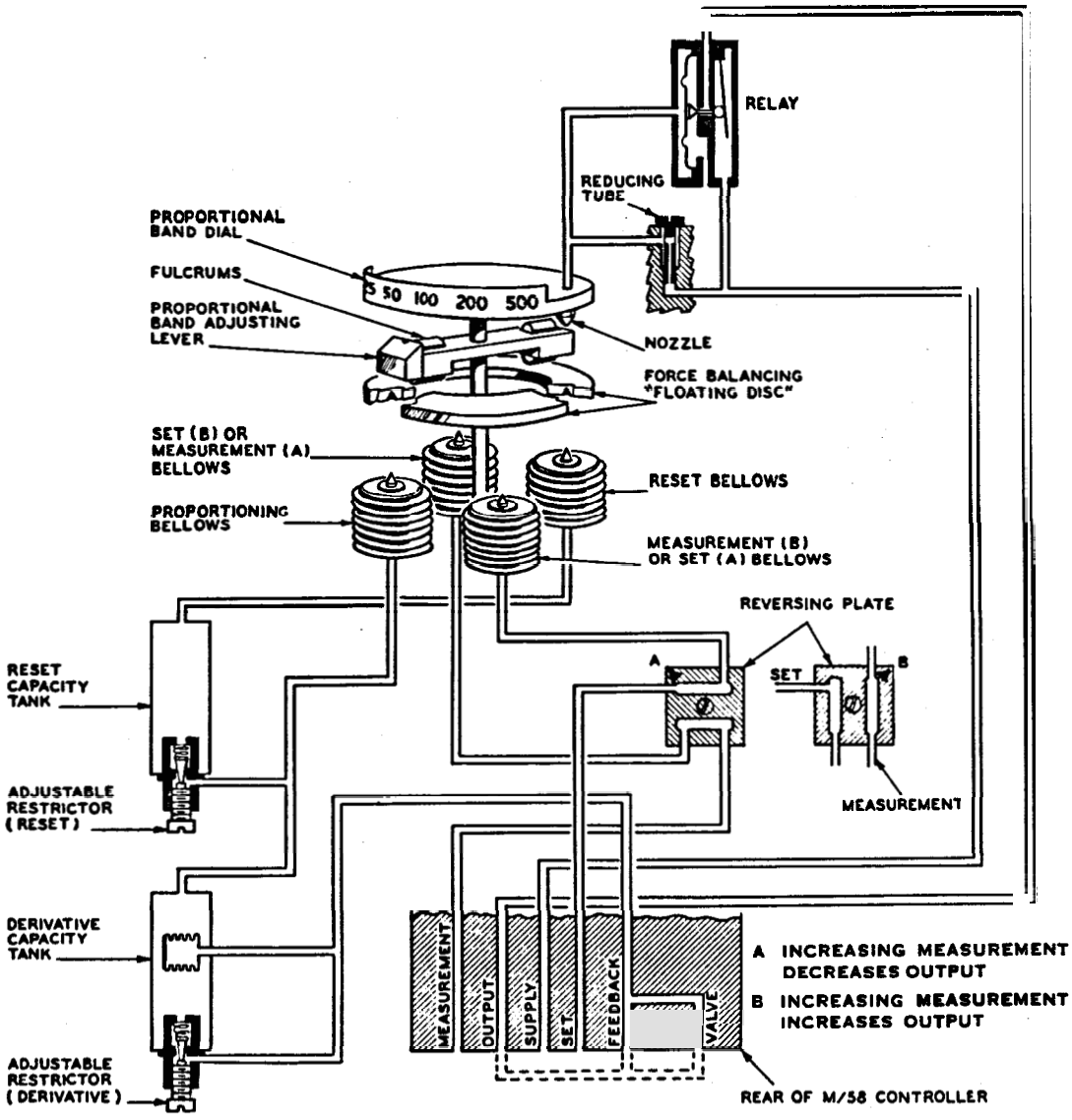


Fig. 5.16. Schematic diagram of type M58 pneumatic controller.

# 6. SPECIAL PROCESS INSTRUMENTATION SYSTEMS

R. L. Moore

G. H. Burger J. W. Krewson
D. G. Davis P. G. Herndon

## 6.1 PRESSURE TRANSMITTERS (WELD-SEALED)

### 6.1.1 Introduction

Two types of special weld-sealed pressure transmitters are used on the MSRE. One is the Foxboro Instrument Company type 611GM-ASX,[1] and the other is the Dynisco model APT45-SP-1C.[2] Both types of transmitters measure pressures in the helium cover gas spaces of the MSRE fuel- and coolant-salt systems where absolute containment of the process fluid is essential. The Foxboro type 611GM-ASX transmitters (Fig. 6.1.1) are directly connected to the cover gas spaces of the fuel- and coolant-salt systems pump bowls, drain tanks, and helium supply lines. They are also used in the fuel- and coolant-salt pump lube oil systems, which connect directly to the cover gas systems. These transmitters are identical to the Foxboro Company's standard commercially available units except for the pressure sensing elements, which have been modified to meet the containment requirements of the MSRE.[3] The Dynisco model APT45-SP-1C transmitters (Fig. 6.1.4) are used to measure helium purge gas pressures in the fuel-salt sampler-enricher, the coolant-salt sampler, and the fuel-salt processing system sampler. These are identical to Dynisco's standard model except for the process connections, which are specially designed weld nipples.[4]

### 6.1.2 Force-Balance Type

**6.1.2.1 Principles of operation.** The special type 611GM-ASX pressure transmitter is a force-balance instrument that measures pressure and transmits it as a proportional 10- to 50-mA dc signal. Except for the pressure sensing element, which is described in the following paragraph, the signal detecting and transmitting components are identical to those on the standard differential pressure transmitter described in Sect. 5.2.2 and will not be discussed here.

**6.1.2.2 Construction.** The pressure sensing assembly, shown in Fig. 6.1.2, is made of type 316 stainless steel and consists of a special bellows-capsule subassembly mounted inside of a standard Foxboro type 611 forged body. The construction of the stainless steel bellows capsule is shown in Fig. 6.1.3. All joints are seal welded to form a leak-tight chamber which contains the process fluid. Connection to the process is made by means of the Autoclave Engineers, Inc., $\frac{3}{8}$-in. male adapter. The process fluid, which is helium gas, enters the chamber, where pressure is applied to the bellows capsule through the capillary tube. The force on the bellows capsule is transmitted through a flexure member to the lower end of the force bar. The arrangement of the bellows capsule and body is a feature that is used to good advantage on the MSRE. The body, when properly connected to the MSRE containment air system, provides a secondary containment barrier which will prevent the release of process fluid if the bellows-capsule assembly develops a leak (see Sect. 6.2). The high quality of each unit is assured by the strict procedures observed to control material composition, cleanliness, and fabrication methods during construction operations.

**6.1.2.3 Performance characteristics.** The performance characteristics and operating conditions are as follows:

| | |
|---|---|
| Measurement range | 40 to 250 psig |
| Measurement accuracy | 0.5% of range span |
| Power supply | 65 V dc |
| Design pressure (bellows capsule) | 29 in. Hg vacuum to 350 psig |
| Design temperature (bellows capsule) | 300°F |
| Working pressure | 29 in. Hg vacuum to 250 psig |
| Working temperature | |
| With integral amplifier | −20°F to +180°F |
| With remote amplifier | −20°F to +250°F |
| Leak rate (bellows capsule) | $<1 \times 10^{-8}$ cc helium per second determined by mass spectrometer |

Two transmitters selected at random from the lot were subjected to rigid performance tests before any were accepted for use in the reactor system.

### 6.1.3 Strain Gage Type

**6.1.3.1 Operating principle and construction.** The construction of the Dynisco unbonded strain gage pressure transmitter is shown in Fig. 6.1.4. All process-fluid-containing joints are seal welded, and all material in contact with the process fluid is 347 stainless steel except the weld nipple, which is made of 400 series stainless steel. The basic pressure sensing element is a diaphragm which is welded at its rim to the transmitter body. An actuating rod joins the diaphragm to the two armature beams of the strain gage mounting assembly. This is shown schematically in Fig. 6.1.5 by the diagram in the inset. The armature is held in place by two flexure members which are fastened rigidly at one end to the fixed support member. Application of pressure to the diaphragm produces a force which is converted to motion by the spring characteristics of the flexure member. This motion is measured by strain gages. Span is determined by the spring rate of the flexure members. Four separate strain gage resistance elements, each formed by several turns of fine wire, are held under tension between the armature and the fixed support frame. These four resistance elements (*A*, *B*, *C*, and *D*) are connected into a Wheatstone bridge circuit, also shown in Fig. 6.1.5.

Thus an increasing pressure on the diaphragm raises the actuating rod and moves the armature in such a manner as to increase the strain in resistance elements *A* and *B* and decrease the strain in elements *C* and *D*. The result is an unbalance in the bridge circuit which yields an output signal proportional to the pressure on the diaphragm. The case is sealed and evacuated, resulting in vacuum reference and absolute pressure range.

**6.1.3.2 Performance characteristics.** The performance characteristics and operating conditions are as follows:

| | |
|---|---|
| Measurement range | 0–100 psia |
| Excitation voltage | 7 V dc |
| Full scale output | 35 ± 2 mV dc |
| Maximum pressure | 200 psia |
| Bridge resistance | 350 Ω ± 10 |
| Ambient temperature limits | −100°F to +250°F |
| Thermal sensitivity | <0.01%/°F from −65°F to +250°F |
| Leak rate (diaphragm) | $<1 \times 10^{-8}$ cc helium per second determined by mass spectrometer |

### References


1. Foxboro Instrument Company, Foxboro, Mass.
2. Dynisco Division of American Brake Shoe Co. Bulletin No. 145B.
3. Oak Ridge National Laboratory Specification Numbers JS-81-161 and JS-81-161B, Weld-Sealed, Electric Force Balance Pressure Transmitter for the Molten Salt Reactor Experiment.
4. Oak Ridge National Laboratory Specification No. MSRE-78.


## 6.2 PRESSURE TRANSMITTER REFERENCE CHAMBERS

Although the Foxboro ECI pressure transmitters, described in Sect. 6.1 above, satisfy the requirements for primary containments, they present only one barrier to the escape of radioactive materials when the bellows assembly is referenced directly to the atmosphere. Two barriers are required when the transmitters are connected directly to the reactor primary system. Since the transmitter sensing bellows assembly is completely enclosed by the transmitter body, the containment requirements could have been satisfied by plugging the reference port. This approach was undesirable because variation in ambient temperature would produce variations in the pressure of entrapped air on the reference side of the bellows, which, in turn, would produce corresponding variations in the transmitted signal. Complete evacuation of air from the reference side of the bellows would have eliminated the ambient temperature effects; however, any inleakage of air would have produced downscale zero shifts. This latter approach was seriously considered but was abandoned when it was determined that obtaining the degree of leak-tightness necessary to prevent long-term zero drifts would require considerable effort and expense. The containment requirements could also have been satisfied by means of instrumented closures consisting of solenoid valves installed in reference port vent lines and actuated by radiation monitors. This approach was considered to be undesirable because the use of individual block valves and monitors on each transmitter would have been too complex and costly. Also, the use of a common system would have resulted in downscale shifts in the signal from all other transmitters connected to the common vent line if one transmitter bellows failed.

To circumvent this problem, a device was developed which would provide a second barrier to the escape of activity without interfering with the performance of the

transmitter. This device consists of a floating diaphragm assembly in a housing (see Fig. 6.2.1). The volume above the diaphragm is connected to the reference port of the pressure transmitter. The volume below the diaphragm is at atmospheric pressure. During normal operation, the device acts as a free-floating slack diaphragm and introduces less than 0.1% error in the transmitter signal. In the event of a rupture of the bellows assembly in the transmitter, the device will contain the released radioactive gases. A limit switch is provided which will detect bottoming of the diaphragm resulting from bellows failure in the transmitter. All switches are connected to a common annunciator in the main control room.

A fringe benefit resulting from the use of the reference chamber and from the inherent design of the transmitter is the ability to remotely test the operability of the transmitter during reactor shutdown. Such tests are accomplished by removing the protective cap at the bottom of the chamber, pushing or pulling on the guide shaft, and observing response of the receiving instrument. Failure to respond is an indication of a degradation of the sensitivity of the transmitter or receiver which, in turn, is an indication of incipient failure. To permit such testing, the MSRE reference chambers were installed outside of biological shielding in areas that were accessible during shutdown or during low-power operation of the reactor.

When operating conditions permit, additional checks on the accuracy of the transmitter range calibration may be made by pressuring the area between the reference chamber and the transmitter and comparing the pressure applied with the change in indicated pressure. Provisions were made in the design of the reference chamber and of the reference port piping to permit such tests to be performed safely without disassembly of piping systems.

## 6.3 DIFFERENTIAL PRESSURE TRANSMITTERS (WELD SEALED)

### 6.3.1 Introduction

The special weld-sealed differential pressure transmitters (Figs. 6.3.1 and 6.3.2) are used to measure flow rates, liquid levels, and pressure drops in the helium cover gas spaces of the MSRE fuel- and coolant-salt systems where absolute containment of the process fluid is essential. They are directly connected to the cover gas spaces of the fuel- and coolant-salt systems pump bowls, off-gas lines, and helium supply lines. They are used on the fuel- and coolant-salt pumps lube oil systems, which connect directly to the cover gas systems, and on the liquid waste tank. Two types of Foxboro Instrument Company transmitters are used on the MSRE. Both types are identical except for the signal transmitting mechanisms. The type 13XA transmits a pneumatic signal, and the type 613HM transmits an electronic signal. Both types are also identical to the Foxboro Company's standard commercially available units described in Sect. 5.2.2 and 5.3.2 except for the body, which has been modified to meet the containment requirements of the MSRE. The special feature of these instruments is the leak-tight construction of the body assembly. All process-containing joints on the body assembly are seal welded. The design, fabrication, and testing of these transmitters are described by the company specifications[1,2] and the vendors' construction drawings and test reports.[3]

### 6.3.2 Principles of Operation

The pressure sensing element in both types of transmitters is mechanically coupled to a force-balance system. This system detects and converts differential pressure to a proportional signal which is transmitted to remote receivers. The type 13XA transmits a 3- to 15-psig pneumatic signal, and the type 613HX transmits a 10- to 50-mA electronic signal. The instruments operate in the same manner as described in Sect. 5.2.2 and 5.3.2 for the standard Foxboro type 13 and type 613 differential pressure transmitters.

### 6.3.3 Construction

The signal detecting and transmitting components are identical to those on the standard differential pressure transmitter described in Sect. 5.2.2 and 5.3.2 and will not be discussed here. The differential pressure sensing assembly, shown in Fig. 6.3.2, consists of a silicone-fluid-filled diaphragm-capsule subassembly mounted inside of a modified standard high-pressure Foxboro type 613HM forged body. The modifications are the specially machined lips, which are seal welded to form the process-containing joints. All body material is 316 stainless steel except the silicone fluid in the diaphragm capsule and the Elgiloy diaphragm which serves as a fulcrum for the force bar. Elgiloy is a steel alloy with good spring characteristics. Connections to the process are made by means of Autoclave Engineers, Inc., $^3/_8$-in. female fittings machined in the body. The high quality of each unit is assured by the strict procedures observed to control material composition, cleanliness, and fabrication methods during construction operations.

### 6.3.4 Performance Characteristics

The performance characteristics and operating conditions are as follows:

| | |
|---|---|
| Measurement range | |
| Types 613HM-MSX and 13XA | 20 to 200 $H_2O$ differential |
| Type 613HM-HSX | 200 to 850 in. $H_2O$ differential |
| Measurement accuracy | 0.5% of range span |
| Design pressure | 29 in. Hg vacuum to 350 psig |
| Design temperature | 300°F |
| Working pressure | 29 in. Hg vacuum to 250 psig |
| Working temperature | |
| With pneumatic output | −20°F to +250°F |
| With integral amplifier | −20°F to +180°F |
| With remote amplifier | −20°F to +250°F |
| Leak rate | $1 \times 10^{-8}$ cc helium per second determined by mass spectrometer |

Three transmitters, two electronic and one pneumatic, selected at random from the lot, were subjected to rigid performance tests before any were accepted for use in the reactor system.

### References

1. Oak Ridge National Laboratory specifications numbers JS-81-157, Rev. 2, and JS-81-157A, Weld-Sealed, Electric Differential Pressure Transmitter for the Molten Salt Reactor Experiment.

2. Oak Ridge National Laboratory specifications numbers JS-81-162, Rev. 1, and JS-81-162A, Weld-Sealed, Pneumatic Differential Pressure Transmitters for the Molten Salt Reactor Experiment.

3. Foxboro Instrument Company, Foxboro, Mass.

## 6.4 CELL AIR OXYGEN ANALYZER

### 6.4.1 Introduction

Before the MSRE is placed in operation, most of the air is evacuated from the secondary containment enclosure, which is then filled with nitrogen to a normal operating pressure of 2 psig negative. During operations a cell atmosphere of nitrogen containing less than 5% (by volume) of oxygen is maintained at all times. The low oxygen content serves to eliminate the hazards of combustion in case oil leaks from the fuel pump lubricating system onto hot pipes in the reactor cell. Nitrogen is added to the enclosure as needed to make up for air inleakage. The leak rate into the enclosure is determined by: (1) observing changes in absolute pressure, (2) observing the change in differential pressure between the enclosure and a temperature-compensating reference volume located inside the enclosure, and (3) observing the changes in oxygen content of the atmosphere in the enclosure. This section describes the instrument system used to measure the oxygen content of that atmosphere.

### 6.4.2 Oxygen Analyzer

The oxygen content of the containment atmosphere is monitored continuously by an on-line analyzer system, which is shown in Fig. 6.4.1. The heart of the system, which was assembled and checked out at ORNL, is a Beckman Instruments, Inc., model F3 oxygen analyzer. The operation of the instrument is based on a measurement of the magnetic susceptibility of the gas that is being analyzed. A complete description is given in the Beckman Instruction Manual.[1] The basic requirement was to detect a change in oxygen content of 0.02% (by volume) over the range from 4.9 to 5.1%. The Beckman instrument, which has two measuring ranges (0–10% and 0–25%) is capable of measuring oxygen content with an accuracy of 1% of full scale value. The desired sensitivity (0.02%) is obtainable over the full measuring range of the instrument when a potentiometer-type device is used to read the output signal. When the 0 to 25% range is selected, the oxygen content can be monitored over the range from normal air (approximately 22% oxygen) to, and below, the normal 5% operating level.

The inlet gas to the analyzer is taken from the reactor cell evacuation line 565 in the vent house and is discharged to line 566 as shown in Fig. 6.4.1. A pressure differential exists between these two lines, which form a low-flow bypass loop across the component cooling pumps (see Fig. 3.6.0). These pumps continuously circulate the atmosphere within the containment enclosure. Since the pressure rating of the analyzer (30 psig) is less than the 50 psig minimum required for secondary containment enclosures and since a possibility existed that the sampled air could be contaminated, safety-grade block valves were installed in both the inlet and discharge lines to maintain the integrity of the containment enclosure and to protect the operators. The valves are also used for routine operations and for maintenance purposes. The arrangement of the valves in the inlet and discharge lines is shown in Fig. 6.4.2. The control- and safety-grade circuits for the valves are described in Sect. 4.8.3.6.

The gas sample also passes through a cold trap, where moisture is removed, and then through a heated section of inlet pipe before it enters the analyzer. To obtain accurate measurements, the sample entering the analysis

cell must be dry, and the sample temperature must be between 50 and 110°F. The cell must also be operated at the same pressure used when it was calibrated. A back-pressure regulator installed in the discharge line holds the pressure in the cell constant at 14.7 psia.

The analysis cell may also be connected to two reference gas supply lines for calibration and purging operations. The connection to either the sample gas line or the two reference gas supply lines is made by manipulating the three-way selector valve shown in Fig. 6.4.1. The pure nitrogen supply is used to set the zero point of the measuring cell. The 95% nitrogen–oxygen mixture is used to adjust the range of measurement. Both reference gas lines are equipped with check valves to prevent the containment air sample from back-flowing and with pressure relief valves that open when pressures over 20 psig are applied.

Components of the oxygen analyzer system are mounted in a cabinet as shown in Fig. 6.4.3. The cabinet is located in the vent house.[2]

### References

1. Beckman Instruments, Inc., Model F3 Oxygen Analyzer, Instruction No. 1040-D.

2. Oak Ridge National Laboratory drawing D-HH-Z-55523 – Reactor Cell Oxygen Analyzer Installation Details.

## 6.5 CONTROL VALVES (WELD-SEALED)

### 6.5.1 Introduction

The special control valves discussed in this section are used primarily in the fuel- and coolant-salt cover gas systems where a high degree of cleanness, absolute containment of the radioactive process fluid, and tight shutoff characteristics are essential. They control flows in helium supply lines, off-gas lines, and lubricating oil lines, all of which connect directly to the cover gas spaces of the fuel- and coolant-salt systems. They are also used in the liquid waste storage system. Absolute containment of the helium gas supply is also required for reasons of economy. Since helium gas is relatively expensive, leakage must be held to a minimum.

Since most of the valves are located in remote areas, remotely operated actuators were required. Pneumatically powered actuators were selected for these applications because they are highly reliable devices, readily available from commercial sources. Two types of operators were used. One is a conventional elastic-diaphragm type for use in areas where ambient temperatures and nuclear radiations are low. The other is a special all-metal bellows type for use on valves located in areas where nuclear radiations or ambient temperatures or both are high.

### 6.5.2 Construction

The valve shown in Fig. 6.5.1 is typical. It was designed, constructed, and tested by the Mason-Neilan Division of the Worthington Corporation in accordance with ORNL Job Specification Number JS-81-160.[1] In addition to the pneumatic operator, the valve shown is composed essentially of three main parts, the lower body with its replaceable seat, the upper body or bonnet that contains the secondary stem packing, and the movable stem which includes the plug at its lower end and the bellows seal which is attached to the stem near the plug with a seal-type weld. The upper part of the bellows is attached to a thin flange which acts as a gasket between the upper and lower parts of the body. This flange extends to the outer edge of the lower body, and the outer edge of the flange is turned up to form a lip that mates with a similar lip machined on the upper surface of the lower body. These lips are designed to be welded together, but this is the final step in the assembly procedure. To assemble the valve, the stem with bellows attached is first inserted, and then the upper and lower body parts are properly aligned and bolted together. Next, several operational tests are performed to check the stem movement for signs of binding and to measure the leak rate through the port. If the performance is not satisfactory the valve is disassembled and reworked until satisfactory performance is achieved.

Just before the valve is installed in the system, the seal weld is made, and the body, including the weld, is subjected to hydrostatic pressure tests and leak tests.

All parts of the valve except the Stellite 6 seat and 17-4 PH plug are fabricated of either 304 or 316 stainless steel. One member of all stainless steel bearing surfaces, sliding parts, and screwed joints is fabricated from 416 stainless steel to reduce the possibility of galling.

The stem sealing bellows is a three-ply 304 stainless steel unit fabricated by the Fulton Sylphon Division of Robertshaw Controls Company. It has a life expectancy rating of over 20,000 mechanical cycles of full ¾-in. valve stroke when operating at 500°F with a 350-psi differential pressure applied to the bellows wall.

Conventional packing of oil-free graphited asbestos in the valve bonnet forms a secondary stem seal. A fitting, machined in the side wall of the bonnet, may be used to

pressurize or to detect a leak in the stem seal bellows. Additional protection against leakage which could result from a ruptured bellows is provided by the back-seating portion of the valve stem. This portion of the stem and the seat are located inside the bonnet.

The unique features of the ½ in. valve body, aside from the welded stem-seal bellows, are the integral ring-joint-flange end connections. Compared with a conventional flanged valve, this design eliminates the need for two welds and two mating flanges. The integral joints also simplify the problems of leak detection. By utilizing the leak detector hole connecting the roots of the two ring grooves and by drilling a similar hole through the two mating ring gaskets (thus connecting all four volumes between the gaskets and the flange grooves), only one leak detector connection is required for each valve.

Additional construction details are shown in refs. 2 and 3.

### 6.5.3 Performance Characteristics

The performance characteristics of the valve are as follows:

| | |
|---|---|
| Design pressure | 300 psig |
| Design temperature | 500°F |
| Stroke length | ⅜ in. |
| Flow characteristics | |
| For throttling service | Linear or equal percentage |
| For shutoff service | Tapered plug |
| Rangeability | 25 to 1 |
| Hydrostatic test pressure | 1.5 times design pressure. |
| Leak rate | |
| From the body | Less than $1 \times 10^{-3}$ std $cm^3$ per 24-hr day as determined by mass spectrometer |
| From inlet to outlet connection | When 350 psig is applied to either connection, less than 1 std $cm^3$ of dry, oil-free air per minute |

### 6.5.4 Operators

The operator shown on the valve in Fig. 6.5.1 is the conventional spring-loaded elastic diaphragm type. It is manufactured by the Foxboro Instrument Company and is used on valves located in areas where the nuclear radiation intensity is low and the ambient temperature variations are not extreme.

The operator shown in Fig. 6.5.2 is a special all-metal spring-loaded, bellows-actuated type that is used on valves located in high radiation or high ambient temperature areas or in areas where both conditions prevail. The operating piston and bellows are enclosed in an airtight housing. The opening between the operating stem and the bellows housing is sealed by a stem seal bellows so that air pressure can be applied to either one or both sides of the piston. This feature is used to good advantage on valves located in the reactor and drain tank cells, which operate at a slightly negative pressure. Signal air pressure is applied to one side of the bellows, and the other side is connected to the atmosphere outside of the cells. Atmospheric pressure, which remains relatively constant, becomes the reference pressure. If the cell pressure is used as a reference, the valve position would vary with cell pressure changes, making precise control difficult. This operator is manufactured by The Annin Company.[4,6,7]

The action of both types of operators is reversible, so that each can be used for both fail-close, air-to-open mode and fail-open, air-to-close mode applications.

Some of the operators are also equipped with position switches as shown in Fig. 6.5.3.[5] These switches are actuated by the movement of the valve stem to operate lamps on the control boards which indicate whether a valve is open or closed.

### References


1. Oak Ridge National Laboratory Job Specification Number JS-81-160, Bellows-Sealed Valves for Helium Gas Service for the Molten Salt Reactor Experiment.
2. Mason-Neilan Division of Worthington Corporation, Drawing Number EX-1161-2-E, ½-inch Special Bellows Seal Valve – Type III, IIIA, and IIIB.
3. Oak Ridge National Laboratory drawing D-HH-B-48971, MSRE Helium Valve.
4. Oak Ridge National Laboratory drawing D-HH-B-48971, MSRE Helium Valve Actuator.
5. Oak Ridge National Laboratory drawing D-HH-B-41765, MSRE Helium Valve Position Indicator Assembly.
6. The Annin Company drawing AD1451, Assembly, 50 square-inch × ½-inch Stroke, Bellows Seal Operator.
7. The Annin Company drawing PB1406, Parts List, 50 square-inch × ½-inch Stroke, Bellows Seal Operator.


## 6.6 WEIGH SYSTEM

### 6.6.1 Introduction

An accurate measurement of the amount of salt in each of the MSRE drain tanks is required for inventory purposes and for safe operation of the reactor. Knowledge of the inventory of salt in each drain tank enables the operator to determine the location as well as the total inventory of salt. Such information is necessary

for keeping a running inventory of the amount of uranium in the system and is a valuable aid in performance of fill, drain, and transfer operation. Also, knowledge of individual tank inventories can be useful in detecting system failures such as ruptures or leaks in lines or vessels.

Individual tank inventories can be obtained by measuring the level and correcting for density and vessel geometry or by weighing the vessel and contents and subtracting its tare weight. The choice of system is strongly influenced by the geometry and weight of the vessel; by environmental conditions of temperature, pressure, radiation, etc.; and by other considerations such as remote maintenance requirements and the effect of pipe loading on the apparent weight of the vessel.

After considering the various factors involved, it was decided that the highest accuracy could be obtained by weighing the tanks.

### 6.6.2 System Description

**6.6.2.1 General.** Figure 6.6.1 shows a typical MSRE tank support and weigh cell installation. Not shown in Fig. 6.6.1 are the tank heaters and insulation. The coolant tank and fuel storage tank heaters and insulation are attached to the tank and constitute a part of the tare weight of the tank. The fuel drain tanks and the fuel flush tank are heated by an oven which rests on the floor and does not contribute to the tare weight. Steam domes are provided on the two fuel drain tanks but not on the coolant salt fuel flush and fuel storage tanks. As shown in Table 6.6.1, the physical sizes and weights of the two fuel drain tanks are equal, but the sizes and weights of the other tanks differ from those of the fuel drain tanks and from each other. Otherwise, the weigh systems used on the five tanks are identical.

As shown in Fig. 6.6.1, the tanks are hung in suspension, and their weights are supported by two compressive-type pneumatic weigh cells,* which, in turn, are supported by vertical columns resting on the cell floor.

Each drain tank is provided with a support skirt welded to the tank just above the upper head circumferential weld. Twelve stainless steel hanger rods are fastened by clevis-type couplings to this skirt and suspend the tank from a support ring located at about the elevation of the bottom of the steam drum. This has two arms extending from it on opposite sides. Each of these arms is suspended by three hanger bolts from a pneumatic weigh cell resting on top of a support column. Each of these two weigh cells has a point support consisting of a bearing ball 3/4 in. in diameter. The columns pass through holes in the arms on the support ring with 1/4 in. clearance on a diameter, an amount sufficient to allow proper operation of the weigh cells, while at the same time the tank assembly is prevented from falling off the two support points. The long hanger bolts and the point support arrangement reduce the horizontal loading on the weigh cells to a negligible amount.

The steam drum and bayonet assembly used on the fuel drain tank assemblies also rests on the support ring mentioned above and is thus a part of the total loading indicated by the weigh cells.

To effect maintenance on a weigh cell or to remove a drain tank or its cooling system, the weight of the drain tank assembly must be removed from the weigh cells. To accomplish this, the end of each support ring arm is equipped with a jack bolt which operates against a bracket on the supporting columns just below the arm. A slight lifting of the arm by this bolt will permit unthreading of the three hanger bolts on each weigh cell. A collar is installed on each column just below the

*Supplied by the A. H. Emery Co., New Canaan, Conn.

**Table 6.6.1. MSRE drain tank weights**

| | Live weight (lb) | | | Tare weight (lb) |
|---|---|---|---|---|
| | Normal load | Full tank | Recorder range | |
| Fuel drain tank 1 | ~11,000 | ~12,000 | 13,000 | ~7,500 |
| Fuel drain tank 2 | ~11,000 | ~12,000 | 13,000 | ~7,500 |
| Fuel flush tank | ~9,000 | ~10,000 | 13,000 | ~4,500 |
| Coolant drain tank | ~6,000 | ~7,000 | 10,000 | ~3,800 |
| Fuel storage tank | ~11,000 | >13,000 | 13,000 | ~5,800 |

arm onto which the weight of the assembly can be lowered by backing off the jack bolts.

The hanger bolt adjustments are also used to level the support ring and extension arm assembly and the weigh cell base so that the tank will hang freely and so that the applied force will be parallel to the center line of the weigh cell.

As stated previously, pneumatic weigh cells are used to measure the tank weights. This type of load cell was selected for the following reasons:

1. It is of all-metallic construction and, therefore, is immune to radiation effects or damage.
2. Tare load suppression may be accomplished remotely by adjustment of a pneumatic regulator.
3. The span accuracy may be checked externally by varying the tare loading pressure and observing the change in the live load signal.
4. The operation utilizes null balance principles and is, therefore, free from zero or range shifts.
5. Operation of the cell may be checked remotely.
6. Compensation for ambient pressure variations is provided by the addition of a reference pressure connection on the tare regulator.

Although the calibration of the weigh cell is inherently stable and can be checked remotely, the effects of thermal expansion and pressure on pipe loading introduce uncertainties in the zero (or tare) calibration of the system.

The effects of pipe loading were minimized by the use of long circular pipe runs in horizontal planes and by careful attention to support and anchor points. Since the effects of pipe loading could not be completely eliminated, single-point level probes of the type described in Sect. 6.10 were installed. These probes provide a means of determining the level of one point in the tank. When the level is maintained at this point, the weigh cell readings can be compared with readings taken under similar conditions, and corrections can be made for the effects of pipe loading.

**6.6.2.2 Weigh cell construction.** Figure 6.6.2 shows a basic weigh cell having one live load and one tare load area. The cell is cylindrical in shape and is composed of stacked plates and rings bolted together to form an outer case and a central load-sensitive support column. The support column is positioned and supported by diaphragms which also serve as flexure members and divide the cell into three chambers. The lower chamber is called the tare area, and the upper chamber is called the live load or weighing area. The center chamber is normally vented to the ambient pressure surrounding the cell and is called the ambient area. The central support column is free to move within limits in a direction parallel to the center line of the cell. Application of weight (force) to the cell tank tends to move the column toward the base plate, while an increase of air pressure in the tare and weighing areas tends to move the column away from the base plate. This motion is restricted to ±0.006 in. by internal limit stops. A baffle-nozzle assembly is provided in the weigh chamber. As explained below, this assembly detects motion of the support column and maintains the column position within ±0.001 in. of a balanced position.

The weigh cells are of all-metallic construction. Except for the bolts, the central column and the portion of the outer case below the upper diaphragm are aluminum. All other parts of the cell, including the diaphragm, are steel. The diaphragm thickness is 0.003 in.

The cell shown in Fig. 6.6.2 has a nominal effective tare area of 45.5 in.$^2$ and a nominal effective weigh area of 39.8 in. (The effective area is the difference in areas of diaphragms above and below the chamber). Since the internal pressure is limited by design to approximately 45 psi above ambient, the nominal tare capacity of this cell is approximately 2000 lb, and the nominal live load capacity is approximately 1500 lb. To obtain the capacities required in the MSRE, additional diaphragm stacks were added to the cells as shown in Fig. 6.6.3. By proper interconnection of various areas the weigh and tare areas can be effectively increased. The numbers of stacks added vary with the cell capacity requirements. The cell shown in Fig. 6.6.3 is used on all fuel drain, flush, and storage tanks. It has a nominal capacity of 4000 lb tare and 6500 lb live load. Effective tare and live load areas are approximately 77 in.$^2$ and 158 in.$^2$ respectively. This is the largest cell used in the MSRE and was the largest that the manufacturer had built. A smaller cell with a nominal capacity of 1500 lb tare and 4500 lb live load is used on the coolant drain tank. The effective tare and live load areas of this cell are approximately 40 and 118.5 in.$^2$ respectively.

**6.6.2.3 Theory of operation.** The basic weigh cell system is shown schematically in Fig. 6.6.4. Air pressure in the weighing chamber is automatically adjusted to counterbalance the applied force minus the force supplied by the tare chamber. This adjustment is accomplished by means of an internal baffle-nozzle and a remote pilot relay.

In the balanced condition, the normal flow of air is through the jet, to the weighing area, and thence to atmosphere through a bleed port provided in the booster pilot valve. If the active load increases, the load

column moves toward the jet, causing an increase in the jet line pressure. This actuates the booster pilot valve, which then seals the bleed port and opens a poppet valve, thus admitting high-pressure air into the weighing area. Sufficient air pressure is admitted until the column moves away from the jet to reestablish the balanced load condition. The weighing pressure is proportional to the load applied.

Pressure in the tare area is precisely controlled by means of a manually adjustable regulator which is referenced to the ambient pressure surrounding the weigh cell. This ambient-pressure reference, together with special piping connections and precision machining of weigh cell components, provides a means of compensating the weigh cell system for the effects of variations in the pressure surrounding the weigh cell. Since the top of the weigh cell must of necessity be referenced to ambient pressure, the output of the weigh cell would be a function of ambient pressure if all other pressures were referenced to atmosphere. By connecting the various areas as shown in Fig. 6.6.3, by maintaining equal effective areas in the various chambers, by referencing the tare regulator to ambient pressure, and by referencing the pilot relay to atmospheric pressure, the effect of ambient pressure is compensated. This compensation is produced by the ambient-pressure-dependent component of the tare pressure, which produces a force that exactly counterbalances the force on the top of the weigh cell produced by ambient pressure.

An alternate method of compensating for ambient pressure would have been to reference all parts of the system, including the pilot relay, to ambient pressure and to correct the output for ambient pressure variation. This method could not be used in the MSRE because air bleed from the pilot relay into the drain tank cell could not be tolerated.

**6.6.2.4 Signal modification and readout.** Figure 6.6.5 is a block diagram of the weigh system for fuel drain tank 1, fuel drain tank 2, and the fuel flush tank. The diagrams for the coolant drain tank and the fuel storage tank systems are similar; however, in these installations, the lines do not penetrate secondary containment, and block vavles are not required.

Four lines leave the weigh cells and penetrate containment. Cone-type remote disconnects are provided in these lines to permit removal of the weigh cells. Three of the lines from each cell connect to an associated weigh panel in the transmitter room. The weigh panels contain the tare regulator, the pilot relay, a tare pressure indicator, and miscellaneous valves, filters, and lines (see Fig. 6.6.4). The fourth line from the weigh cell is vented in the transmitter room and provides the atmospheric-pressure reference. A single line, vented inside containment, provides the ambient reference pressure to the tare pressure regulators in both weigh panels as well as to the corresponding regulators in weigh panels for drain tank 2 and the fuel flush tank. The line also provides an ambient-pressure reference pressure to one side of the tare pressure manometer when the manually operated tare pressure selector switch is in the FD1, FD2, or FFT position. This switch is ganged with another switch, which connects the other side of the tare manometer to tare pressure outputs of the weigh panels. The pressure read on the tare manometers is therefore the difference between the ambient pressure and the tare pressure. This differential pressure does not vary with ambient pressure and is set to produce a 3-psig live load signal output from the weigh panels when the tanks are empty.

All lines penetrating containment are provided with block valves which are instrumented to close if the pressure inside secondary containment exceeds +2 psig (see Sect. 1.5).

When the tare pressures are correctly set, the live and tare pressures are as shown in Table 6.6.2.

The signal pressures from either weigh cells on fuel drain tank 1 or on any of the other tanks can be selected by means of a manually operated selector switch and measured accurately on a manometer which is permanently provided for this purpose. These signal pressures are also converted to industry standard pressures (3 to 15 psig) and averaged to form a single 3- to 15-psig pneumatic signal which is fed to a recorder on the main board and to a strain-gage-type pressure transducer (pneumatic-to-electric converter). The 0- to 25-mV dc output of the pressure transducer is connected to one input of the computer data logger. To provide an adjustable high-level alarm the averaged signal pressure is also fed to an adjustable-set-point pneumatic switch, which is basically a conventional proportional controller set for zero proportional band so as to give on-off (binary) action. This controller is integrally mounted with the recorder. When the averaged signal is above set point the output of the controller is zero, and when it is below set point the output is 20 psig. A conventional pressure switch detects the state of the controller and actuates an annunciator on the main control board when the level is high.

The signals from weigh cells on other tanks are also modified, recorded, and alarmed in a manner identical to that described above for fuel drain tank 1.

Table 6.6.2. MSRE weigh cell signal and tare pressures

| | Pressure (psig)[a] | | | | |
|---|---|---|---|---|---|
| | Live | | | | Tare |
| | Empty tank | Normal load[b] | Full tank | Recorder at full scale | |
| Fuel drain tank 1 | | | | | |
| cell 1 | 3 | 34.5 | 41 | 44 | 40 |
| cell 2 | 3 | 34.5 | 41 | 44 | 40 |
| Fuel drain tank 2 | | | | | |
| cell 1 | 3 | 34.5 | 41 | 44 | 40 |
| cell 2 | 3 | 34.5 | 41 | 44 | 40 |
| Fuel flush tank | | | | | |
| cell 1 | 3 | 31.5 | 34.5 | 44 | 22 |
| cell 2 | 3 | 31.5 | 34.5 | 44 | 22 |
| Coolant drain tank | | | | | |
| cell 1 | 3 | 25 | 29.5 | 42 | 35 |
| cell 2 | 3 | 25 | 29.5 | 42 | 35 |
| Fuel storage tank | | | | | |
| cell 1 | 3 | 28.5 | >44 | 44 | 29 |
| cell 2 | 3 | 28.5 | >44 | 44 | 29 |

[a]Approximate – do not use for MSRE weight calculations. Assumes load equally distributed on weigh cells.
[b]Maximum weight expected under normal shutdown conditions. Does not include weight of water in steam dome.

**6.6.2.5 Performance characteristics.** The more important operating characteristics of the weigh cells are as follows:

1. Nominal accuracy – better than ±0.5% of reading or ±0.2% of cell rating.
2. Supply pressure – 60 psig.
3. Air consumption – 0.1 scfm.
4. Response – 99% recovery to step change in load in less than 10 sec.
5. Ambient pressure compensation – less than 0.1% change in output pressure over ambient pressure range from 10 to 15 psia.
6. Operating temperature (weigh cell) – 0 to 175°F.

A factory calibration curve for one of the fuel drain tank weigh cells is shown in Fig. 6.6.6. The results obtained in this calibration are typical of those obtained in other calibrations.

### References

1. *MSRE Design and Operations Report, Part I, Description of Reactor Design,* ORNL-TM-728, pp. 238–41.

2. ORNL Job Specification JS-34-156, Pneumatic Weigh System for Molten Salt Reactor Experiment.

3. ORNL drawing E-FF-D-41500, Fuel Drain Tank Supporting Structure and Weigh Assembly.

4. Instruction manuals for A. H. Emery Company for weigh cells serial numbered SS-1069-A, SS-1069-B, SS-1070-A, SS-1070-B, SS-1071-A, SS-1071-B, SS-1072-B, SS-1072-A, SS-1073-A, and SS-1073-B. A. H. Emery Company, New Canaan, Connecticut.

## 6.7 THERMOCOUPLE SYSTEMS

### 6.7.1 General

The most extensive and possibly the most important process measurement made in the MSRE is temperature. With a few exceptions, all high-temperature measurements are made with Inconel-sheathed, mineral-insulated Chromel-Alumel thermocouples. There are over 1100 thermocouples in the MSRE system. Approximately one-third of these are associated with the fuel-salt system, and about one-third are associated with the coolant-salt system. The remainder are associated with the off-gas system and with auxiliary systems such as fuel processing, cooling water, and lube oil. About

half of the couples are located inside secondary containment. Most of the couples measure temperatures in the range of 900 to 1300°F. The majority of the couples were installed for the purpose of monitoring sections of pipe and vessels heated by external electrical heaters.

Design of the MSRE thermocouple system presented problems of selection, procurement, fabrication, and inspection of thermocouple materials, hot junctions, attachments, cold end seals, disconnects, lead wire, and containment penetration. Although the state of the art of temperature measurement with thermocouples was highly developed at the start of the MSRE design and most of the information required was available from ORNL experience or from the literature, considerations of environment, reliability, and compatibility with remote maintenance concepts and containment criteria generated requirements not found in more conventional installations.

An effort was made to use known techniques and materials wherever possible; however, in areas where the existing technology was inadequate, development of new devices and techniques was required. In many cases this development consisted of modification of existing techniques. In other cases, such as fabrication of attachment, hot junctions, cold end seals, disconnects, and containment penetration seals, considerable development effort was required. In all cases, new development items were thoroughly tested under laboratory and field conditions before installation in the MSRE.

### 6.7.2 System Description

**6.7.2.1 Overall system.** The block diagram of the MSRE temperature measurement system, Fig. 6.7.1, shows the distribution of thermocouple measurements in the various MSRE systems, the methods of readout, and the routing of the interconnecting thermocouple lead wire.

Most of the thermocouples are routed to a central patch panel. Inputs of the readout instrumentation are also routed to the patch panel, and interconnection of the thermocouples and readout instrumentation is made with removable patch cords. This arrangement permitted the design and installation to proceed before final assignment of the readout was determined and presently permits revisions of readout assignment to be made without the necessity of changes in permanent wiring.

With a few exceptions, all thermocouples connected to the computer data logger and to all readout instrumentation located in the main and auxiliary control room are routed through the patch panel.

Thermocouples associated with the safety system were not routed through the patch panel, because to do so would violate the criteria of separation of control and safety systems and because of the possibility that the safety system might be inadvertently disabled during routine operations.

In those cases where the thermocouples were needed only for localized control or monitoring of auxiliary equipment, the thermocouple was connected directly to field-mounted instrumentation and was not routed through the patch panel.

Most of the thermocouple signals are read out on the computer data logger, the thermocouple scanner, and the magnetic-amplifier-type single-point temperature switches. These instruments are discussed in Sects. 2.12, 6.14, and 6.15. Other signals are read out on standard commercially available recorders, indicators, and indicator-controllers. Signals from safety system thermocouples are amplified and converted to a 10- to 50-mA signal which is used to operate other components of the safety system. Foxboro ECI-type emf-to-current converters are used for this conversion.

**6.7.2.2 Fuel-salt system.** Approximately 414 thermocouples are installed on components of the fuel-salt system.* Of these, 354 are installed on pipe and vessel surfaces, 20 are installed in the fuel drain tank bayonets, and 40 are installed on the reactor vessel access plug and nozzle. The distribution of these thermocouples is about equally divided between the reactor cell and the drain tank cell, with 204 being located in the reactor cell and 210 located in the drain tank cell. All thermocouple assemblies, disconnects, lead wire, and containment penetrations in these areas are designed to withstand high-level nuclear radiation and high ambient temperature, and with a few exceptions the couples are all weld-attached. Figure 6.7.2 shows a typical installation for a pipe-mounted thermocouple. The thermocouple is a mineral-insulated, Inconel-sheathed assembly attached to the pipe by means of an INOR-8 lug. The thermocouple is routed along the pipe for a short distance to minimize errors resulting from heat conduction and is then routed to the removable half of a remotely operable disconnect located outside the high-temperature zone. With a few exceptions all disconnects in the reactor and drain tank cells are multipin devices that will disconnect six

*Excluding the 71 couples installed on the fuel storage tank and on the fuel transfer line (see Sect. 6.7.2.7).

thermocouples at a time. An effort was made to assign all thermocouples connected to a given disconnect to the same system component so that the component could be removed and reinstalled with all thermocouples attached. In the few cases where this was not possible, single-circuit remotely operated disconnects were installed between the thermocouple element and the multicircuit disconnect. Multiconductor thermocouple extension lead cable is used to connect those disconnects associated with control-grade thermocouples to junction box terminals located outside of containment and biological shielding. The multiconductor cable consists of six fiber-glass-insulated thermocouple pairs in a ¼-in.-OD copper tube. Since this cable penetrates the containment vessel and since the glass insulation can become hygroscopic after irradiation, seals are provided at both ends of the cable and at the point of containment vessel penetration. To further ensure containment and to provide a means of leak detection, provisions were made for continuous pressurization of the cables with nitrogen at 50 psig. To provide additional reliability and the required physical and electrical separation, standard stainless-steel-sheathed, mineral-insulated Chromel-Alumel thermocouple material was used to connect disconnects associated with safety-grade thermocouples to the external junction box terminals. In these installations the internal magnesium oxide pack is sufficient to ensure containment, and gas pressurization was neither necessary nor practical. Although end seals were not required on these cables for containment purposes, both ends were sealed to prevent absorption of moisture.

Thermocouples attached to exterior surfaces of the reactor vessel, drain tanks, heat-exchanger and pump-bowl freeze flanges, and freeze valves are fabricated and installed in a manner similar to that described above for piping installations. Thermocouple installations in the fuel drain tank bayonet tube assemblies and on the reactor vessel access nozzle are similar to the piping installations insofar as thermocouple fabrication and routing of thermocouple and lead wire exterior to the vessels are concerned; however, due to space limitations, the installation of the couples in the vessel was more difficult, and special techniques were required.

Figure 6.7.3 shows a bayonet tube thermocouple assembly. One assembly of this type is installed in each of the two fuel drain tanks for the purpose of measuring the vertical profile of temperature inside the tanks. This assembly consists of a type 304 stainless steel tube into which ten thermocouples are inserted and attached to the tube wall at five elevations. The attachment is made by inserting and furnace brazing the tip of the thermocouple into a sleeve and button assembly that is subsequently welded to the tube wall at a right angle to the tube. This arrangement holds the thermocouple at the proper elevation, permits the thermocouple tip to be flush with the outer wall of the tube, and accommodates differences in the thermal expansion of the thermocouple sheath and the tube wall. To minimize heat losses the tube was packed with Fiberfrax insulation. The bayonet assembly is inserted into a thimble in the drain tank and does not contact the salt directly. A cover plate and handle assembly, welded to the top of the bayonet tube, supports the tube and provides a means of insertion and removal.

Figure 6.7.4 shows the locations of thermocouples in the reactor access nozzle, and Fig. 6.7.5 shows the routing of a typical couple. To determine the temperature distribution in the frozen salt seal between the nozzle and plug, 14 thermocouples are installed at four elevations on the outside of the nozzle walls and on the inside of the plug wall. Twelve additional thermocouples are installed at two elevations on the outer walls of the control rod thimbles, and three thermocouples are installed at two elevations on the outer walls of the graphite sampler thimble. One thermocouple is installed in a well in the graphite sampler plug assembly for the purpose of measuring temperature in the salt stream at the reactor outlet. The access nozzle and graphite sampler plug assemblies were designed to permit all thermocouples to be installed outside of containment walls. Thus no thermocouple penetration of containment was required. The major problem with these installations was the attachment of thermocouples in locations where space was limited and routing of thermocouples through a congested area. All thermocouples in the plug assemblies are brought to remotely operable disconnects located above and attached to the assembly (see Fig. 6.7.6). The disconnects are connected to other permanent-mounted disconnects by means of a removable jumper cable.

**6.7.2.3 Coolant salt system.** Approximately 417 thermocouples are installed on components of the coolant salt system. Of these, 259 are installed on pipe and vessel surfaces, 122 are installed on the radiator tubes, 28 are installed on other surfaces within the radiator, and 8 are installed on surfaces of the radiator cooling air ducts.

In addition to the thermocouples, resistance temperature detectors are provided for measurement of the rise in temperature in the air passing through the radiator. These detectors are located in the main air duct upstream of the radiator and near the stack outlet.

To obtain an accurate measurement of the difference in temperature of the coolant salt entering and leaving the radiator, six thermocouples are installed in wells located in the main loop piping upstream and downstream of the radiator.

With the exception of those thermocouples installed in wells and on the radiator tubing, all thermocouples in the coolant salt system are fabricated and installed in a manner similar to that of the fuel-salt system thermocouples described previously. However, since the radiation level in the coolant-salt cells is low during shutdown and relatively low during operation and since the major portion of the system is not enclosed by a containment vessel, remote maintenance capabilities and radiation-resistant materials were not required.* Thermocouples attached to pipes and vessels in this area were, therefore, terminated in standard (manually operated) single-circuit disconnects at a short distance outside of the pipe or vessel insulation, and standard polyvinyl-insulated lead wire was used beyond the disconnect (see Fig. 6.7.7).

The 120 thermocouple located on the outlet ends of the radiator tubes were attached with specially developed band-type clamps and routed to junction box terminals located in the coolant cell outside the radiator enclosure and cooling air duct (see Fig. 6.7.8). Other thermocouples inside the radiator enclosure, such as those on hangers and supports, were attached by welding and routed to either the coolant cell junction box previously mentioned or to junction boxes located in the area above the radiator enclosure. Because of the prevailing high ambient temperature, high-temperature (fiber-glass) insulation was required on all lead wire and terminal strips in this area. Standard polyvinyl-insulated lead wire was used beyond the junction boxes outside the radiator enclosure and high ambient zones; however, the polyvinyl was stripped from the section of lead wire inside the junction box and replaced with ceramic beads.

All thermocouples within the radiator are mineral-insulated, Inconel-sheathed assemblies. Since the radiator enclosure is essentially an oven and since the temperatures within this oven can be as high as 1300°F when the doors are closed, the use of disconnects within the enclosure was not desirable. Instead, the thermocouples in this area were run continuously from the point of attachment to the junction boxes or disconnects outside of the enclosure. As a result, some radiator thermocouples are as long as 18½ ft. Since most of this length is heated and since the resistance of magnesium oxide decreases exponentially with temperature, high-quality insulation and adequate insulation thickness were required to avoid significant errors resulting from electrical leakage between wires and between wires and the sheath. This consideration also applied to other long installations, such as on the reactor vessel and fuel drain tanks, and was one of the main reasons why sheath diameters smaller than ⅛ in. were not generally used in the MSRE.

Thermocouples installed in the radiator cooling air ducts were weld-attached and routed through the duct walls and fitted with single disconnects. Extension lead wire from these disconnects was routed to a junction box in the coolant cell. These thermocouples are similar in construction to the thermocouples attached to hangers and supports in the radiator but are not generally exposed to such high temperatures. Standard polyvinyl-insulated lead wire was used in these installations beyond the disconnects.

**6.7.2.4 Off-gas system.** Fourteen of the thirty-two off-gas system thermocouples are located in the charcoal beds, one is in the volume tank inside the charcoal bed containment vessel, three measure water temperature inside the charcoal bed containment vessel, nine are located on the particle trap and charcoal filter, two are located on the gas holdup cooler, and three are located on gas letdown lines. One of the three letdown couples is located on line 522 near the letdown valve, one is located on the upper gas letdown line from the fuel-salt circulating pump, and one is located on a similar line from the coolant-salt circulating pump. With the exception of those couples installed on the particle trap, the gas holdup cooler, and in the charcoal bed cooling water, all off-gas system thermocouples were installed in wells. Since the off-gas system temperatures are relatively low, all thermocouples in this area were fabricated from 310 stainless-steel-sheathed material obtained from ORNL stores.

Figures 6.7.9 and 6.7.10 show the location and routing of thermocouples installed inside the charcoal bed containment vessel installation. All thermocouples located inside containment are routed into a thermocouple containment junction box located at top center of the charcoal bed containment vessel with no breaks in the sheath between the hot junction and the junction boxes. Compression-type tube fittings were used to seal the thermocouple penetration of the junction box. This arrangement provides the required containment as well as protection from the effects of the humid environment existing in the water-filled containment vessel.

*Thermocouples associated with the part of the coolant-salt system inside the reactor cell are fabricated and installed in the same manner as the fuel-salt system thermocouples.

Charcoal bed thermocouples are inserted in wells as shown in Fig. 6.7.11. The couples in the volume tank were installed in the same manner except that the stainless steel wool trap was omitted. Cooling water couples are immersed directly in water and strapped to lines for support. Individual disconnects, provided on each couple inside the junction box, connect the couples to fiber-glass-insulated lead wire which extends to a junction box located outside the high radiation area, in the vent house. Standard polyvinyl-insulated lead wire was used beyond the vent house junction box.

Thermocouples installed on the particle trap are weld attached in a manner similar to the installations previously described for heated pipes and vessels. Charcoal filter thermocouples are installed in wells. To permit remote maintenance or removal of the particle trap or charcoal bed, all thermocouples on these components are routed to remotely operable disconnects.

Except for six couples located on letdown lines and on the volume tank and gas holdup cooler, all off-gas system thermocouples terminate in a patch panel in the vent house. These couples may be read out on instruments located in the vent house and are not presently connected to the main patch panel.

**6.7.2.5 Cover gas system.** Except for five line-mounted couples, all thermocouples in the cover gas system are installed in or on components of the oxygen removal helium dryer and helium preheater systems.

Figure 6.7.12 shows the oxygen removal unit installations. Temperatures of the internal titanium getter are measured and controlled with $^1/_{16}$-in.-OD mineral-insulated, stainless-steel-sheathed couples inserted through Conax glands into grooves in the heaters. The Conax gland provides a seal at the point of vessel penetration. Gas temperatures above the getter are measured by a shorter $^1/_{16}$-in.-OD couple installed in the same manner. Temperatures at the inlet of the getter are measured with a $^1/_8$-in.-OD mineral-insulated, stainless-steel-sheathed couple inserted in a well at the bottom of the unit. To provide signals for protection against overheating, two couples are attached to the outer wall of the unit beneath the external heaters. These couples are weld attached in a manner similar to that described for the heated salt systems. All couples on the helium dryer and helium preheater systems are similarly attached to outside walls and used for heater control and overheat protection.

The five line-mounted couples are attached with mechanical band-type clamps. Temperature information obtained from these installations is used for flow correction and other operational purposes.

With the exception of the three $^1/_{16}$-in.-OD couples installed in each of the oxygen removal units, all thermocouples in the cover gas system are $^1/_8$-in.-OD mineral-insulated, stainless-steel-sheathed assemblies obtained from ORNL stores. Individual (manually operated) disconnects were provided on all couples, and polyvinyl-insulated lead wire was run from the disconnect directly to the readout instrument. All cover gas system readout instrumentation is installed in field panels located in the diesel house.

**6.7.2.6 Cooling water system.** Fourteen thermocouples are used to measure temperatures in the cooling water system. With the exception of the charcoal bed cooling water installations described previously, all cooling water system thermocouples are standard commercially available bayonet-type assemblies, installed in wells. Since temperatures in this system are low and environmental conditions are not severe, conventional materials and practices were used throughout, and no special techniques were required. In addition to the thermocouple measurements, nine temperature measurements are made locally with seven dial-type temperature indicators, one bulb-type temperature indicator-controller, and one temperature switch. These sensors are also installed in wells.

**6.7.2.7 Fuel processing system.** Approximately 71 thermocouples are installed on salt-containing heated pipes and vessels in the fuel processing cell. These thermocouples are installed in same manner as described for the coolant-salt system. An additional 69 thermocouples are installed in other parts of the fuel processing system. These installations are conventional in most cases and are described in Sect. 3.13.

**6.7.2.8 Miscellaneous.** Thirty-six thermocouples are used to measure ambient temperatures at various locations in the containment cells and operational areas. Except for those installed in the reactor and drain tank cells, conventional practices and materials were used in these installations. In the reactor and drain cells, stainless-steel-sheathed, mineral-insulated couples were connected to extra terminals on multicircuit remotely operable disconnects and installed so that no supports were near the tip of the couple.

Two thermocouples measure water and vapor temperatures in the vapor condensing system. These thermocouples are installed in wells. Standard materials and practices were used in the fabrication and installation of these couples.

Winding temperatures in the lube oil pump motors are measured by four thermocouples (one on each motor) embedded in the winding.

Temperatures of lubricating and cooling oil entering and leaving the fuel- and coolant-salt circulating pump motors and thermal shields are measured with 12 thermocouples installed at six locations on oil inlet and outlet lines. Inlet temperatures are measured on each system at a point just downstream of the oil pumps by couples installed in wells. Outlet temperatures are measured by thermocouples mechanically clamped to the pipe in a manner similar to that described for the radiator tube installations. The four couples on the fuel-salt circulating pump oil outlet lines are located in the reactor cell and are routed to a remotely operable disconnect.

Two mechanically clamped thermocouples attached to external lines measure the component-coolant-pump lubricating oil.

Three thermocouples, installed in wells, measure the temperature of air entering and leaving the component coolant pumps.

Four thermocouples, inserted into drilled holes, measure the temperature of the main blower bearings.

Except where specific mention has been made above, standard materials and practices were used for all applications discussed in this section.

The MSRE thermocouple tabulation[1] lists all thermocouples numerically, identifies the readout instrument, and, where applicable, identifies the patch panel terminal assignment. Other pertinent information is also given in a remark column, in notes, and on figures.

### 6.7.3 Basic Thermocouple Assemblies

The basic thermocouple assembly used in almost all MSRE installations consists of sheathed, magnesium oxide-insulated Chromel-Alumel wire material, cut to the required length and provided with seals at both ends and a junction of the Chromel and Alumel wire at the hot (or measurement) end. The purpose of the seals is to prevent absorption of moisture.

Figure 6.7.13 shows six basic types of thermocouple assemblies. Welded closures are provided at the hot ends of all thermocouples. Inside the fuel and drain tank cells, where the radiation level is high, the cold ends are sealed with an inorganic sealant. In areas where radiation levels are low, the cold ends are sealed with organic materials. With the exception of those thermocouples used to measure the differential temperature across the coolant-salt radiator and a few couples on a resistance-heated section of the fuel drain line, all hot junctions in the MSRE are grounded.

All thermocouple assemblies attached to heated pipes and vessels containing molten salt are Inconel-sheathed. Other assemblies are stainless-steel-sheathed.

All MSRE thermocouple assemblies except those associated with safety systems are fabricated from duplex wire material; that is, the Chromel and Alumel wires are contained in one sheath. To provide a means of detecting detached thermocouples, the safety system assemblies were fabricated from individually sheathed Chromel and Alumel wires. In these installations the thermocouple junction is formed through the pipe or vessel wall, and the sheath is insulated from ground.

Common sources of failure in sheathed assemblies are wire breakage at the hot junction and leakage of moisture through pinholes or cracks in the hot and cold end seals. The probability of failure at the hot junction is increased significantly when the thermocouples are operated at high temperature and/or are subjected to fast temperature transients. Because of the large number of thermocouples in the MSRE system, a high degree of reliability for individual thermocouples was required to ensure continuity of operations. In particular, high reliability was needed for those couples that are operated at high temperatures or are located in inaccessible areas (such as the fuel and drain cells) where replacement is difficult. To ensure that a high degree of reliability was obtained, close attention was paid to detail in the procurement of materials and in the fabrication of thermocouple assemblies.

Where requirements were not severe and lengths were less than 3 ft, standard thermocouple assemblies (described in paragraph 6.7.11.2) were used. Where requirements were severe and where lengths exceeded 3 ft, thermocouple assemblies were fabricated in ORNL shops using material described in paragraph 6.7.11.3 and the procedures discussed below. ORNL shop fabrication was necessary in these cases because, at the time, the fabrication procedures were developmental in nature and in many cases the required lengths could not be determined sufficiently in advance to permit fabrication outside ORNL. A by-product of this in-house fabrication was that short assemblies needed in areas such as the coolant-salt system could be fabricated from scrap materials left over after fabrication of the longer assemblies.

### 6.7.4 Thermocouple Hot Junction Fabrication

**6.7.4.1 Standard assemblies.** Standard assembly hot junctions were vendor-fabricated in accordance with the procedures specified in ORNL Specification IS-124 (see paragraph 6.7.11.2).

**6.7.4.2 Special assemblies.** Special assembly hot junctions were fabricated in ORNL shops in accordance with the following procedures.

*Duplex grounded-junction assemblies.* The end of the sheathed material was dressed so that the Chromel and Alumel wires were flush with the end of the sheath. A small piece of filler rod material having a composition appropriate for the sheath material was placed against the end and fused to the wires and the sheath using the tungsten-inert-gas process.* The completed closures were then dye penetrant inspected and radiographed in two directions, each 90° apart and perpendicular to the thermocouple axis. The radiography procedure is described in ORNL Specification IS-124. Dye penetrations were made in accordance with ORNL Specification MET-NDT-4.

*Duplex insulated-junction assemblies.* The procedure for fabrication of $^1/_8$-in.-OD insulated (ungrounded) junction assemblies was the same as that of the grounded junction except that before the end closure was made, magnesium oxide insulation was removed to a depth of approximately $^3/_{16}$ in. by air blasting. A junction of the Chromel and Alumel wires was formed, at a distance of approximately 0.030 in. from the end of sheath, by fusing with a tungsten arc in an inert gas atmosphere.† Magnesium oxide was then packed around the junction, and the end closure was welded and inspected as described above.

*Single-wire safety-system assemblies.* The hot end closure of the safety-system assemblies was fabricated in the same manner as the duplex grounded-junction assemblies. However, in these assemblies the actual thermocouple junction was formed when the thermocouples were attached to the pipe or vessel.

### 6.7.5 Thermocouple Cold End Seals

After fabrication and inspection of the hot junction, thermocouples that were to be located in high radiation areas were sealed with a water mix glaze compound (Physical Science Corporation, formula 0900). The 0900 glaze compound was applied to the end of the assembly in a paste form before baking and after removal of a small amount of the magnesium oxide insulation by air blasting. The thermocouple assemblies were then baked in a tube furnace for a minimum of 16 hr at 250 to 350°F to remove all moisture from the magnesium oxide insulation and 0900 glaze compound. After baking out moisture, the compound was cured for 16 to 20 min at 1550°F and then slowly cooled to room temperature. The resultant seal was helium leak-tight, radiation resistant, and capable of operating at temperatures up to 1750°F. Thermocouples that were to be located in low radiation were sealed with heat-shrink tubing after baking. The heat-shrink tubing seal was formed by slipping a short length of irradiated polyvinyl chloride tubing, having an inside diameter slightly larger than the sheath, over the end of the sheath and part of the wires and heating with a hair-dryer hot air blower. After the tubing had shrunk tightly around the sheath and before it had cooled, the tubing was crimped around the wire with pliers. Test seals made in this manner were found to be helium leak-tight with 100 psig internal pressure. The heat-shrink tubing used for these seals was made by Rayclad Tubes, Inc.

Cold ends of standard thermocouple assemblies were sealed with epoxy in accordance with the requirement of ORNL Specification IS-124.

### 6.7.6 Methods of Attachment

**6.7.6.1 General.** The attachment of thermocouples to INOR-8 pipes and vessels required special attention, and considerable effort was spent in developing and testing thermocouple attachments. Developmental tests showed that welded attachments would be desirable in those applications where the couples were attached to heated pipes and vessels and where high accuracy and/or reliability was required. The use of welded attachments, however, presented problems in maintaining the structural and metallurgical integrity of the pipe or vessel wall at the point of attachment and in inspection of the weld attachment. These problems were solved in a variety of ways, with the particular solution being dependent on the application. For example, the possibility of diffusion of dissimilar metals into pipe and vessel walls, which would have occurred if the Inconel sheath or the Chromel and Alumel wires were welded directly to INOR-8 walls, was avoided by welding an INOR-8 tab to the hot junction end of a mineral-insulated, Inconel-sheathed thermocouple in the shop and subsequently welding the INOR-8 tab to the pipe or vessel wall in the field. Thermocouple attachments to components of the primary fuel salt system were made by first laying down a pad of

*Although the thermocouple material was baked by the seller to remove moisture and checked for low insulation resistance at ORNL after receipt, additional wire-to-wire and wire-to-ground resistance measurements were made before the hot junction fabrication because the presence of moisture in the insulation can cause blowout of the weld and result in unsatisfactory hot end seals. Material found to have low insulation resistance was rebaked to remove the moisture.

†See Fig. 7.26 (insulated junction) for general dimensions and details of insulated-junction thermocouples.

INOR-8 weld metal, inspecting the weld, and then welding the tab to the pad. This technique permitted the detection of weld cracks before attachment of the thermocouple. Although a possibility exists that undetected cracks were produced in the pad when the thermocouple was attached, these cracks are not expected to propagate from the pad to the pipe or vessel wall. The use of weld pads was limited to portions of the MSRE where the consequences of failure are severe. In areas, such as the coolant-salt system, where the consequences of component failure are less severe, attachments were made directly to the pipe or vessel walls, and the remote possibility of the existence of undetected weld cracks was accepted.

Because of the possibility of penetrating or otherwise damaging the thin-walled radiator tubes, thermocouples were attached to these tubes with specially developed band-type clamps instead of by welding. Since the conduction of heat to band-attached couples is inherently poorer than to the weld-attached couples and since the radiator couples are located in a moving air stream, special precautions were required in the design of these attachments to avoid excessive errors.

As a general rule the use of thermocouple wells was avoided on lines and vessels containing molten salt because of the possibility of mechanical failure. However, to obtain an accurate measurement of the difference in temperature of coolant salt entering and leaving the radiator, wells were installed in the main loop piping upstream and downstream of the radiator. Also, to measure the temperature in the fuel salt stream at the reactor outlet, a well was installed in the graphite sampler plug assembly. In other MSRE systems, where the consequence of mechanical failure is less severe, wells are used more extensively. This is particularly true in the cooling water system, where all but three are installed in wells.

**6.7.6.2 Surface welded attachments.** Welded attachments were used for all surface temperature measurements on INOR-8 pipes and vessels other than the radiator tubing. Figure 6.7.14 shows typical surface welded attachments. The attachments were made by welding INOR-8 metal tabs to the Inconel sheath in the shop and subsequently welding the tab to the pipe or vessel. The tabs are $\frac{1}{4}$ in. wide and approximately the same thickness as the sheath wall (0.010 in. for $\frac{1}{16}$-in.-OD and 0.015 in. for $\frac{1}{8}$-in.-OD sheath) and are formed to fit closely around the thermocouple sheath with a lug (or lugs) extending to the side (or sides) for a distance of approximately $\frac{3}{32}$ in. The tabs were welded to the thermocouples, using the inert-gas-shielded tungsten arc process, after fabrication and inspection of the hot junction and hot end closure. To perform this weld, the tube was placed flush with the hot end of the thermocouple, and the tab was joined to the previous weldment around the periphery of the sheath, in a single pass. No weld was made on the side of the tab away from the end of the couple. Considerable care and skill was required in this operation to prevent burning through the thin-wall sheath or damaging the previously fabricated hot junction and end closure. Chill blocks were used to prevent overheating of portions of the assembly other than those being welded. Such overheating can result in wire breakage due to excessive stress or blowout of the weld due to expansion of gas or residual moisture inside the sheath. After the tab weldment was completed, the hot end of the assembly was dye penetrant inspected and radiographed again using the procedures discussed in paragraph 6.7.4.

Two methods were used for attachment of the thermocouple assemblies to INOR-8 pipes and vessels.

Coolant-salt system thermocouples were attached directly to the pipe or vessel with small fillet welds at the edge of the tab. These welds were visually inspected in accordance with the requirements of Sect. 13 of ORNL Specification MET-WR-200.

All thermocouple attachments to components of the fuel salt system in the reactor, drain tank, and fuel storage cells were made by first laying down a pad of INOR-8 weld metal and then welding the tabs to the pad. Single weld tabs were used where the wall thickness was $\frac{1}{8}$ in. or less. Double wing tabs were used on thicker sections. The pads were made as small as was possible and still accommodate the thermocouple tab. The pads have surface dimensions of approximately $\frac{3}{8} \times \frac{5}{8}$ in. for double wing tabs and $\frac{3}{16} \times \frac{5}{16}$ in. for single tabs and a thickness of one weld bead ($\frac{1}{16}$ to $\frac{1}{8}$ in.). The pad surfaces were hand filed where required to obtain a smooth contour which was flat enough to allow the entire thermocouple tab to be placed against it. Care was taken to prevent the tab weldment from extending to the thermocouple sheath or to the INOR-8 base metal. Where practical, an inert atmosphere was used inside the pipe or vessel during welding. Where this was not practical, a visual and penetrant inspection of the area in the vicinity of the weld was made on completion of the weld. All welding was done in accordance with ORNL Specification PS-25, using the inert-gas-shielded tungsten-arc process. Before attachment of the thermocouple, all pads were liquid penetrant inspected in accordance with ORNL Specification MET-NDT-4. Those pads that were located on surfaces having a thickness of less than $\frac{1}{8}$ in. were radiographed in accordance with ORNL Specification MET-NDT-5.

Mechanical attachments were used at locations other than the hot junction where possible. Where welded attachments were required at these locations, pads were provided.

**6.7.6.3 Surface clamped attachments.** Figure 6.7.15 shows the method of attachment of thermocouples located on the thin-walled radiator tubing. These band attachments were specially designed to hold the thermocouple in close contact with the tubing at operating temperature and after repeated thermal cycling. The band is made of $^3/_{16}$-in.-wide, 0.020-in.-thick Inconel attached to the sheath near the hot end seal with gold-nickel brazing alloy. To maintain the close tolerances required for satisfactory attachment, the bands were formed in the shop using a hand-operated die. The brazing operation was also performed in the shop. To maintain maximum heat transfer between the tube and the thermocouple, the braze joint is contoured to fit closely around the thermocouple sheath.

As shown in Fig. 6.7.15, the thermocouple attachment was made by placing the upper section of the band over the tube, engaging the lower section, and crimping. The crimping action draws the band tight around the tube and locks the upper and lower sections together.

To improve accuracy by reducing heat loss into the air stream, the thermocouple was insulated in the region of the hot junction. The thermocouple shown at the far right of Fig. 6.7.15 is insulated with Fiberfrax paper, and the thermocouple second from right is insulated with Fiberfrax board. Both forms performed satisfactorily in test. The paper form was used in the MSRE because it required no machining or preforming prior to installation. The insulation consists of multiple layers of $^1/_8$-in. Fiberfrax paper held in place by 0.005-in.-thick Inconel sheet metal, bent around the insulation and tubing, notched in the region of the thermocouple band, and joined with a "pan lock" seam similar to that used on the thermocouple band clamp.

Figure 6.7.16 shows some of the actual installations in the MSRE radiator.

**6.7.6.4 Well installations.** Figure 6.7.17 shows the construction of the wells used for measurement of the coolant salt radiator inlet and outlet temperature. The design of these wells was analyzed to determine the effects of flow-induced vibrations,[2,3] and prototypes were installed and operated in a pump test facility before installation in the reactor.

Other types of well installations are shown in Fig. 6.7.4, 6.7.11, and 6.7.12.

Wells used in the cooling water system were either standard commercially available assemblies or were fabricated on-site using standard pipe fittings.

### 6.7.7 Disconnects

Figure 6.7.18 shows a six-circuit disconnect of the type used in the reactor and drain tank cells. This disconnect is a modification of a standard Thermo Electric Company disconnect and is constructed of radiation- and heat-resistant materials. As shown in Fig. 6.7.19, individual mineral-insulated thermocouples are connected to female pins in the removable upper section of the disconnect. Not shown in the photograph are the ceramic beads used to insulate individual wires between the thermocouple end seal and the disconnect terminals. In most installations, a multiconductor extension lead cable is connected to the male pins in the lower (fixed) section (see Fig. 6.7.2). However, in safety system disconnects, the leads are brought out to individual (single circuit) mineral-insulated lead-wire cables in a manner similar to that of the upper section. Safety disconnects also have divider partitions to maintain channel separation.

The plug and jack panels were supplied by the Thermo Electric Company and are similar to their standard assemblies except for the insulating material, which is Electrobestos. The housings are similar in construction and size to FS-type conduit boxes and were supplied by the Adalet Manufacturing Company. The jack housing (top half) has a removable back plate to facilitate wiring connection. Swage-type compression tube fittings are utilized to support and restrain the individual metal-sheathed thermocouples. Alignment of the pins during remote maintenance operations is accomplished by means of a guide incorporated in the handling tool. The housings shown in Figs. 6.7.18 and 6.7.19 are aluminum. In those applications where the disconnects were located above and/or in close proximity to heated INOR-8 pipes and vessels, the disconnect housings were fabricated from stainless steel in a similar manner. Disconnects of this type are shown in Fig. 6.7.6.

Outside the reactor and drain cell, thermocouples are individually disconnected with single-circuit Bakelite-insulated disconnects (Thermo Electric type PMSS and JMSS or equal, conforming to the requirements of ORNL Specification IS-160). Similar single-circuit disconnects are used inside the reactor and drain cells. These disconnects are Thermo Electric type PMESS and JMESS, insulated with Electrobestos material.

### 6.7.8 Containment Penetration Seals

**6.7.8.1 General.** To prevent the escape of gaseous or particulate activity from the reactor system during normal operation or in the event of an accident, all

thermocouple penetrations of containment were required to be sealed. Since none of the MSRE thermocouples penetrates or forms a part of the reactor primary containment barrier, all such penetrations in the MSRE are penetrations of reactor secondary containment or of the building containment air system. The permissible leakage through these penetrations varies widely according to the type of containment penetrated.

**6.7.8.2 Coolant and fuel storage cells.** Areas such as the fuel storage cell and the coolant cell are maintained at a slight negative pressure by the building containment air system, and considerable leakage through the penetration can be tolerated. In these areas, thermocouple lead wire was routed directly through conduit or other openings in the containment wall, and the flow of air through the penetration was reduced to an acceptable level by using small openings and by caulking where required.

**6.7.8.3 Fuel and drain tank cells.** In the fuel and drain tank cells the requirements for leak-tightness of containment penetrations are more stringent. The total allowable outleakage from these cells is 8.2 liters/hr STP at a cell pressure of 40 psig.* This leak rate corresponds to 1% of the cell volume per day at the conditions postulated for the maximum credible accident. Although this leak rate is appreciable in itself, it is the total of all leakages through walls and penetrations, and since there are numerous penetrations, the average leak rate through individual penetrations must be much smaller. No maximum leak rate was specified for individual thermocouple penetrations; however, it was desirable that the total leakage through these penetrations be kept to a small fraction of the total leakage. Accordingly a maximum leak rate per wire penetration of $10^{-4}$ std cc of nitrogen per second† at 50 psi differential was set as a design objective, and an effort was made to maintain this objective during fabrication and installation of components of the thermocouple penetration seal system. This objective was not always reached; however, it was often exceeded, and the net result was an acceptable overall leakage rate. All thermocouple wiring penetrating the fuel and drain tank cell containment, except that associated with safety systems, is routed into multiconductor lead-wire cables which are sheathed with ¼-in.OD copper tubing. Seals are provided around the copper tubing at the point of containment penetration and at each end of the cable. Inside the cell the seals are radiation-resistant glass-to-metal seals. Outside the cell the ends are sealed with epoxy. Either of these seals would be adequate in itself to satisfy containment requirements; however, both are required to prevent moisture absorption in the cable. To further ensure containment and to provide a means of leak detection, provisions are made for continuous pressurization of the cables at 50 psig. To eliminate dependence on the pressurization system the in-cell glass-to-metal seals were designed to withstand 50 psi differential pressure in either direction without degradation of leakage characteristics.

Figure 6.7.20 shows the construction of the in-cell seal, and Fig. 6.7.35 shows a completed assembly. This seal was shop fabricated and uses a 13-pin glass-to-metal header seal and a standard tubing reducer. The tubing reducer was flared at the large end so as to fit closely inside the lip of the header and soft soldered to the cable sheath. Prior to this operation the cable was cut slightly longer than the required length, the outer sheath and braid of the cable were stripped from one end for a distance of approximately 4¼ in., and the insulation of the individual wires was stripped for a distance of 4 in.

The bared ends of the individual wires were then threaded in tubes in the header at preassigned locations, and the header was slipped over the wires and soft soldered to the flared reducer. Following this, the individual wires were soldered to the header tubes. Special solders and fluxes and considerable skill and practice were required to obtain satisfactory bonds to the Chromel and Alumel wires.

The completed cable and end seal assembly was then mounted to the disconnect and the wires connected to the plug board in the manner previously shown in Fig. 6.7.19 and discussed in paragraph 6.7.7. After completing assembly of the disconnect and cable, the seal and cable sheathed were tested for leaks.

Following the above shop operations, the disconnect was mounted in the cell, and the attached cable was routed to and through the containment penetrations. Containment penetration seals were made by soldering the penetration sleeve to the cable sheath inside and outside the cell.

The cables were then routed to a preassigned location on a pressurized header and cut to a length which would leave sufficient wire for connection to the junction box terminal strips. At this point the outer sheath and braid of the cable and the insulation on individual wires were stripped as required, the insulated

*R. C. Robertson, *MSRE Design and Operations Report, Part I, Description of Reactor Design*, ORNL-TM-728, p. 441.

†$10^{-4}$ cc/sec corresponds to approximately 1 bubble/min in water immersion tests.

ends of the exposed wire were dipped in epoxy, the cable was inserted through the pressurizer header, and the cable sheath and wire seals were made in the manner shown in Fig. 6.7.21*A*. Since these operations were performed in the field and since repair of defective epoxy seals was either difficult or impossible, only qualified personnel were allowed to make the reactor seals. The qualification procedures included instructions on the methods and fabrication of satisfactory seals in the shop. Figure 6.7.22 shows a header assembly with completed epoxy seals. The header shown is a test section. Actual headers in the reactor are larger and mount as many as seven cables and associated seal pots.

After the epoxy seals were completed and tested, the individual thermocouple wires were connected to terminals in the junction boxes.

All headers are connected to a common 50-psig nitrogen pressure source. Valving and gages were provided in this system as required to permit individual headers to be continuously pressurized, pressurized and valved off, or vented. The headers are normally kept under continuous pressurization with the vent valve closed. When both the supply and vent valves are closed, the rate of pressure drop in the header is an indication of the leakage rate in the cables and end seals. Because of outgassing of cable insulation, a pressure buildup in the cables and header could occur if leakage were very small. Since such pressure buildup must be relieved by venting and since the vented gas would be slightly radioactive, the vent lines are routed to air ducts discharging into the containment air stack.

The sheathed mineral-insulated cables used for safety system lead wire in the reactor cell are sealed with swage-type compression seals attached to the ends of the containment penetration sleeve with threaded pipe fittings.

**6.7.8.4 Other systems.** In other systems, such as the off-gas sampler, sealing requirements were intermediate to those of the building containment and the fuel and drain tank cells. Seals in these areas were designed to be consistent with the individual system containment requirements.

Mineral-insulated, sheathed thermocouple penetrations of charcoal bed containment are sealed with swage-type compression seals (see Fig. 6.7.10).

Off-gas sampler thermocouple penetrations are sealed by potting the lead wires in a copper tube sleeve with epoxy and inserting them through swage-type compression fittings screwed into the containment box wall and sealed with soft solder (see Fig. 6.7.21*B*).

### 6.7.9 Routing

Inside the reactor and drain cell the design of the thermocouple system was strongly influenced by remote maintenance requirements. Considerable effort was required to locate disconnects, assign thermocouples to particular disconnects, and route thermocouple and lead wire so that individual components could be removed with their thermocouples attached and so that the thermocouples, disconnects, and lead wire associated with one component would not prevent or restrict the removal of another component or interfere with other remote maintenance operations. In addition, it was desirable that the thermocouple disconnects be located as near the top of the cell as possible, with no obstructions directly above the disconnect, so that disconnect operations could be performed by pulling or pushing from above with simple, straight tools. Also, since the maximum length of the available sheathed thermocouple material was 30 ft, it was desirable that the disconnects be located as close as possible to related components so that the use of individual disconnects or in-cell splices could be minimized. In almost all cases it was possible to accomplish these objectives with a single disconnect. However, in a few cases it was necessary to use jumper cables between removable disconnects mounted on the components and fixed disconnects mounted at some distance from the component. No in-cell splices were necessary.

Outside the reactor and drain cell, most thermocouples are terminated in single-circuit disconnects. Radiator thermocouples, however, are connected directly to terminals in a junction box and are not provided with disconnects. Most control-grade lead wire is routed from disconnects to junction boxes through conduit and wiring ducts and thence to the main patch panel through wiring trays. However, some lead wire is routed directly to readout instrumentation or to smaller patch panels located in auxiliary areas. Lead wire connecting from the main patch panel to readout instrumentation is routed in wiring trays. Lead wire associated with the safety system is routed in conduits directly to the readout instrumentation. Multiple conduits are provided so that redundant channels are kept separate from each other and from the control system.

The junction boxes are sheet metal enclosures in which barrier-type terminal strips are mounted. A junction box of the type used outside the reactor cell is shown in Fig. 6.7.23.

### 6.7.10 Thermocouple Patch Panels

Figure 6.7.24 shows the construction of the main patch panel cabinet. This cabinet consists of a standard ORNL modular frame equipped with double doors, front and rear integral lighting, and internal braces on which are mounted the thermocouple and pyrometer panel. The pyrometer panel is 47 in. wide and 28½ in. high overall and is fabricated in four sections. Each section contains 180 duplex (Chromel and Alumel) jacks, giving a total of 720 jacks on the full panel. The jacks are Thermo Electric Company type 3JBSS assemblies, inserted from the rear through drilled holes and supported at the rear so as to be flush with the face of the panel. The panelboard material is ¼-in. black Bakelite. Identification numbers are engraved on the board below each jack.

The thermocouple panel is similar in construction to the pyrometer panel but is 35½ in. high and contains 960 jacks.

Figure 6.7.25 shows the rear of the panel before completion of wiring connections. Lead wire from the thermocouple is connected to the upper (thermocouple) panel, and lead wire from the readout instrumentation is connected to the lower (pyrometer) panel. Connections between the panels are made with flexible patch cords. The cords are constructed of flexible extension lead cable (Thermo Electric Company type PPFT or equal with Instrument Society of America calibration KX) and have plugs attached at each end. The plugs are Thermo Electric type 2PSS assemblies similar to the male section of disconnects used in the field. Connect and disconnect operations are performed with a straight line motion without the need for turning or twisting.

It was originally intended that all patch cords be of equal lengths sufficient to reach any thermocouple jack from any pyrometer jack. This objective was found to be impractical, because the resultant large mass of extension cable obscured the operator's view of the board and prevented closing the front doors. To correct this situation the patch cords were cabled in semipermanent bundles, and individual leads were shortened to eliminate excess cable. Long patch cords are kept on hand for use in temporary revisions in thermocouple assignment.

The patch panels used in the fuel processing and charcoal bed systems are similar in construction but are smaller in size, and the patch cords are permanently connected to the thermocouple lead wire at terminal strips located behind the panel instead of being plugged into a thermocouple board.

### 6.7.11 Materials

**6.7.11.1 General.** Wherever possible, standard materials and commercially available assemblies were used in the MSRE thermocouple system; however, special materials were required in some areas. In general, standard materials and assemblies were adequate for monitoring auxiliary systems outside of the reactor and drain cell, and special materials were required on the heated salt systems and on those portions of the thermocouple system that were located inside the reactor and drain cell.

All of the special and most of the standard materials were procured in accordance with formal ORNL specifications. Vendor certification of conformance to the specifications was required, and selected samples of materials were tested at ORNL before acceptance.

**6.7.11.2 Standard thermocouple assemblies.** The following types of standard thermocouple assemblies are used in the MSRE:

*Type A.* Preassembled stainless-steel-sheathed, magnesium oxide-insulated Chromel-P–Alumel thermocouple assemblies, purchased in strict accordance with ORNL Specification IS-124[4] and stocked in ORNL stores.

*Type B.* Preassembled well-type spring-loaded miniature bayonet assemblies consisting of a fiber-glass-insulated Chromel-P–Alumel wire pair, sheathed in a 3/16-in. stainless steel protection tube with the hot junction grounded in a coin-silver tip. This assembly is a commercially available type (Thermo Electric Company type 2C2131D or equal) and is equipped with 12-in.-long metallic armored leads and a male connector.

In general, types A and B are used where the required length was less than 3 ft and temperatures are less than 1000°F. The use of type B couples was further limited to conventional applications such as measurement of cooling water temperatures in nonradioactive areas.

Most of the type A and all of the type B couples are installed in wells. Type A couples installed in wells were equipped with spring-loaded bayonet retainers.

Figure 6.7.26 shows the construction of the type A thermocouple assemblies. Specification IS-124 requires that assemblies be fabricated in accordance with this drawing from materials specified in company specifications IS-121[5] and IS-160[6] and lists procedures for fabrication and inspection of the assembly. Specification IS-160 covers the requirements for thermocouple connectors, and specification IS-121 covers the requirements for magnesium oxide-insulated, stainless-steel-sheathed Chromel-P–Alumel thermocouple material. Section 3 of IS-121 is excerpted and reproduced below.

3.0 Requirements

3.1 Thermocouple Wire

3.1.1 Materials

*a.* The thermocouple wires shall be thermocouple-grade Chromel-P and Alumel, bright anneal, manufactured by the Hoskins Manufacturing Co., Detroit, Michigan.

*b.* The Seller shall certify that the thermocouple wires supplied are as specified and shall provide certified reproductions of Hoskins tags, forms 228-P and 228-A, taken from the wire coils that furnished the thermocouple wires.

*c.* Each wire shall have a smooth bright finish, shall be free from cracks and slivers, and shall be fully annealed.

3.1.2 Calibration

*a.* The accuracy of the individual Chromel-P and Alumel wires with reference to the N.B.S. Standard Platinum 27 shall be within the limits of error given in Table I.

**Table I. Required Accuracy of Individual Wires**

| Temperature, °C* | Wire vs. Standard | Limits of Error |
|---|---|---|
| 0 to 275 | Chromel-P vs. platinum | ±0.045 millivolts** |
| 0 to 275 | Alumel vs. platinum | ±0.045 millivolts |
| 275 to 1260 | Chromel-P vs. platinum | ±½%*** |
| 275 to 1260 | Alumel vs. platinum | ±2% |

*Temperatures are in the International Practical Temperature Scale.

**Limit of error in absolute millivolts is the maximum permissible deviation of the emf value measured (with the cold junction at the ice point) from the reference value given for each temperature of calibration in Hoskins Table E-271-CC for Chromel-P vs. Platinum and Table E-271-AA for Alumel vs. Platinum.

***Limit of error in percent is the maximum permissible deviation in millivolts, determined as above, divided by the reference value given in Hoskins tables for the temperature of calibration.

*b.* The accuracy of any Chromel-P vs Alumel thermocouple pair fabricated from these materials shall be within the limits of error given in Table II.

**Table II. Required Accuracy of Chromel-P vs Alumel Pair**

| Temperature, °C* | Limits of Error |
|---|---|
| 0 to 275 | ±2.2°C** |
| 275 to 1260 | ±¾%*** |

*Temperatures are in the International Practical Temperature Scale.

**Limit of error in degrees is the maximum deviation of the indicated temperature from the true temperature when the emf output of the thermocouple is converted to temperature using Table 6 of N.B.S Circular 561.

***Limit of error in percent is the maximum permissible deviation of the indicated temperature from the calibration temperature divided by the calibration temperature and multiplied by 100.

*c.* The Company will verify the accuracy of thermocouples made from materials supplied by the following procedure: After the thermocouples have been held at a temperature of 870°C in air for 16 hours, a calibration will be made at temperatures between 0°C and 1260°C (with the cold junction at the ice point) in accordance with the procedure recommended in N.B.S. Circular 590.

3.2 Insulation

3.2.1 Materials

*a.* The insulation material shall be electric-furnace-fused magnesium oxide (MgO) in preformed, crushable beads. The magnesium oxide shall have a purity of 99.4 percent (or more) and shall contain less than 30 ppm boron and less than 15 ppm carbon or sulphur.

*b.* The Seller shall supply a certified chemical analysis for the magnesium oxide used as insulation material.

3.2.2 Resistance

*a.* The resistance of insulation between wires and between wires and sheath shall be greater than $10^9$ ohms-foot at 25°C with 500 volts d-c applied after annealing (Paragraph 3.4.3a).

*b.* The resistance of insulation between wires and between wires and sheath shall be greater than 50,000 ohms-foot at 1000°C plus or minus 15 Celsius degrees with 50 volts d-c applied.

*c.* Upon receipt of the material, the Company will test each length of material for compliance with paragraphs 3.2.2.a and 3.2.2.b. To assist in locating zones which may have low insulation resistance at 1000°C, the Company will scan the full length of each piece with a sharp-gradient heat source (between 200°C and 900°C) and will monitor the insulation resistance with an instrument. If any questionable areas are located, they will be tested for conformance with paragraph 3.2.2.b.

3.3 Sheath

Sheath material shall be type TP-310 austenitic stainless-steel tubing conforming to ASTM Tentative Specification A 213-61T except as modified below. (In the following paragraphs, Company amendments to ASTM A 213-61T are arranged under corresponding section headings, paragraph, and table numbers of that standard.)

*a.* Paragraph 3 under "Manufacture" shall state: "Tubes shall be made by the seamless process and shall be cold-drawn."

*b.* Paragraph 22 (b) under "Inspection" shall state: "Certification. – The Seller shall submit to the Company the manufacturer's certified statement of compliance that all tubing conforms to ASTM Tentative Specification A 213-61T, as modified in the Company Specification I.S. 121-2. The Seller shall attach to the manufacturer's certified statement of compliance, certified reports of the results of all required tests. Each test report shall identify the form, size, heat number and lot number. The following test reports shall be required:

1. Chemical composition as determined by ladle analysis.
2. Tensile properties.

3.4 Assembly

3.4.1 Preparation

*a.* The wires and interior of the sheath shall be cleaned and be free of dust, organic residue, metal oxides, or other contaminants at the time of assembly.

*b.* The insulator shall be free of moisture and contaminants at the time of assembly. Care should be taken at all times to prevent the adsorption of moisture by the magnesium oxide.

3.4.2 Swaging

*a.* The assembled sheath, insulator, and wires shall be reduced by a *single-pass swaging operation* to the diameters specified in Table III. Total reduction of the sheath outside diameter shall not exceed 30 percent of the starting diameter.

**Table III. Swaged Assembly Dimensions and Limits**

| Sheath Dimensions and Limits, Inches | | Thermocouple Wires | |
|---|---|---|---|
| Outside Diameter | Wall Thickness | American Wire Gauge Number | Nominal Diameter, Inches |
| 0.250 ± 0.002 | 0.020 ± 0.002 | 18 | 0.0403 |
| 0.125 ± 0.002 | 0.015 ± 0.002 | 22 | 0.0254 |
| 0.0625 ± 0.002 | 0.010 ± 0.002 | 30 | 0.0100 |
| 0.040 ± 0.001 | 0.006 ± 0.001 | 36 | 0.0050 |

*b.* The twist of the wire pairs in the sheath shall not exceed 7.5 degrees per inch at any point, and any twist shall be of a uniform nature.

3.4.3 Finish

*a.* The finished assembly shall be heat treated to fully anneal the thermocouple wires and the sheath. The Seller shall supply the heat treatment data with each shipment, giving the treatment temperatures and the length of time at each temperature.

*b.* The surface of the final thermocouple assembly shall be clean and free of oxide. The surface coating shall be bright. The surface finish shall not exceed a 32 microinches arithmetic average, maximum roughness, as defined in ASA B46.1-1955. There shall be no gouges, scratches, dents or other defects greater than 0.002 inch in depth on the surface of the finished thermocouple assembly.

*c.* The finished thermocouple assembly shall have a minimum length of 30 feet.

*d.* After assembly, but before liquid penetrant inspection, both ends of the sheath shall be sealed by welding.

*e.* Each thermocouple assembly shall be marked with red and yellow identification stripes painted along the sheath at 5-foot intervals.

3.4.4 Liquid Penetrant Inspection

*a.* The Seller shall perform a liquid penetrant inspection on the outside surface of the finished thermocouple assembly in conformance with Company Specification ORNL-MET-NDT-4.

*b.* The Seller shall certify that the assemblies supplied contain no cracks, holes, seams or other defects revealed by the test in the full length of the assembly in its final condition.

Most of the type A assemblies are fabricated of materials having a $^1/_8$-in. sheath outside diameter and No. 22 AWG wires; however, in some applications, materials having a $^1/_{16}$-in. sheath outside diameter and No. 30 AWG wires were used.

**6.7.11.3 Special thermocouple assemblies.** The following types of thermocouple assemblies were specially fabricated at ORNL for use on the MSRE:

*Type C.* Inconel-sheathed, magnesium oxide-insulated Chromel-P–Alumel assemblies fabricated from bulk length materials purchased in strict accordance with ORNL Specification IS-502.[7]

*Type D.* Stainless-steel-sheathed, magnesium oxide-insulated Chromel-P–Alumel assemblies fabricated from bulk-length store-stock materials purchased in strict accordance with ORNL Specifications IS-121[5] and IS-160.[6]

In general, type C assemblies are used on all installations where the thermocouples are attached to heated pipes and vessels containing molten salt, and type D assemblies are used on auxiliary systems where the temperatures are less than 1000°F and the thermocouple length is greater than 3 ft.

Most of the type D assemblies are fabricated of materials having a $^1/_8$-in. sheath outside diameter and No. 22 AWG wires; however, in some applications, materials having a $^1/_{16}$-in. sheath outside diameter and No. 30 AWG wires were used.

All type C thermocouple assemblies except those associated with safety systems have a $^1/_8$-in. sheath diameter and contain two wires (Chromel-P and Alumel). To provide a means of detecting detached couples, the safety system thermocouples were fabricated from individually sheathed single-wire material, having a sheath diameter of $^1/_{16}$ in.; that is, the individual Chromel and Alumel wires are contained in separate $^1/_{16}$-in.-OD sheaths.

With some exceptions the requirements of specification IS-502 are essentially the same as those listed above for specification IS-121. Sections of IS-502 that differ significantly from IS-121 are as follows:

3. REQUIREMENTS

3.1. Thermocouple Wire

3.1.2 Calibration

*a.* The accuracy of the individual Chromel-P and Alumel wires with reference to the N.B.S. Standard Platinum 27 shall be within the limits of error given in Table I.

**Table I. Required Accuracy of Individual Wires**

| Temperature, °F* | Wire vs. Standard | Limits of Error |
|---|---|---|
| 32 to 530 | Chromel-P vs. platinum | ±0.023 millivolts** |
| 32 to 530 | Alumel vs. platinum | ±0.023 millivolts |
| 531 to 2300 | Chromel-P vs. platinum | ±¼%*** |
| 531 to 2300 | Alumel vs. platinum | ±1% |

*Temperatures are in the International Practical Temperature Scale.

**Limit of error in absolute millivolts is the maximum permissible deviation of the emf value measured (with the cold junction at the ice point) from the reference value given for each temperature of calibration in Hoskins Table E-270-CC for Chromel-P vs. Platinum and Table E-270-AA for Alumel vs. Platinum.

***Limit of error in percent is the maximum permissible deviation in millivolts, determined as above, divided by the reference values given in Hoskins tables for the temperature of calibration.

*b.* The accuracy of any Chromel-P vs. Alumel thermocouple pair fabricated from these materials shall be within the limits of error given in Table II.

**Table II. Required Accuracy of Chromel-P vs. Alumel Pair**

| Temperature, °F* | Limits of Error |
|---|---|
| 32 to 530 | ±2°F** |
| 531 to 2300 | ±⅜%*** |

*Temperatures are in the International Practical Temperature Scale.

**Limit of error in degrees is the maximum deviation of the indicated temperature from the true temperature when the emf output of the thermocouple is converted to temperature using Table 17 of N.B.S. Circular 561.

***Limit of error in percent is the maximum permissible deviation of the indicated temperature from the calibration temperature divided by the calibration temperature and multiplied by 100.

3.3 Sheath

The sheath material shall be nickel-chromium-iron alloy seamless tubing conforming to ASTM Tentative Specification B 163-58T except as modified below. (In the following paragraphs, Company amendments to ASTM B 163-58T are arranged under corresponding section headings, paragraph, and table numbers of that standard.)

*a.* The following sections of ASTM B 163-58T do not apply to this specification:

Section 7. Lots for Mechanical Testing.
Section 8. Sampling for Mechanical Tests.
Section 9. Mechanical Properties.
Section 10. Hydrostatic Test.
Section 13. Test Specimens.
Sections 14 (*a*) and 14 (*b*) under Number of Tests.
Section 15 (*c*) under methods of Test and Chemical Analysis.

*b.* Section 5, "Chemical Composition", shall state: "The chemical composition of the tubing shall conform to the requirements for the nickel-chromium-iron alloy listed in Table I."

*c.* Section 6 (*b*) under "Sample for Chemical Analysis" shall state: "The manufacturer of the tubing or the Seller shall perform a check analysis on each lot of furnished material. A lot shall be as defined in Section 6 (*c*). The chemical composition determined shall conform to the requirements in Section 5."

*d.* In Section 6 (*c*) under "Sample for Chemical Analysis", the definition of Lot and Portion shall be: "*Lot*: Finished material of the same diameter and wall thickness, produced from the same heat of alloy, and heat treated in the same furnace charge, or subjected to the same conditions in a continuous furnace. *Portion*: A piece from one finished tube in each lot."

*e.* Section 20 (*c*) under "Certification and Inspection" shall state: "The Seller shall submit to the Company the manufacturer's certified statement of compliance that all tubing conforms to ASTM Tentative Specification B163-58T, as modified in the Company Specification I.S. 502. The Seller shall attach, to the manufacturer's certified statement of compliance, certified reports of the results of all required tests. Each test report shall identify the form, size, heat number, and lot number. The following test reports shall be required:

1. Chemical composition as determined by both ladle and check analysis.
2. Hardness test.
3. Flaring test."

3.4 Assembly

3.4.2 Swaging

*a.* The assembled sheath, insulator, and wires shall be reduced by a single-pass swaging operation to the diameters specified in Table III. Total reduction of the sheath outside diameter shall not exceed 30 percent of the starting diameter.

**Table III. Swaged Assembly Type, Dimensions, and Limits**

| Type | Wire Materials | Sheath Dimension and Limits, Inch | |
|---|---|---|---|
| | | Outside Diameter | Wall Thickness |
| A | Chromel-P, Single Conductor, 0.0252 in. OD Minimum (No. 22 AWG) | 0.063 ± 0.001 | 0.010 ± 0.001 |
| B | Alumel, Single Conductor, 0.0252 in. OD Minimum (No. 22 AWG) | 0.063 ± 0.001 | 0.010 ± 0.001 |
| C | Chromel-P/Alumel, Two Conductor, 0.0252 in. OD Minimum (No. 22 AWG) | 0.125 ± 0.002 | 0.015 ± 0.001 |

*b.* The twist of the wire pairs in the sheath shall not exceed 7.5 degrees per inch at any point, and any twist shall be of uniform nature.

3.4.5 Bend Test

Upon receipt of the material, the Company may perform the following bend test on any portion of any length of thermocouple material supplied. Failure of any length to pass this test will be cause for rejection of the entire shipment.

A portion of any length will be tightly wound around a mandrel that has a diameter twice that of the sheath outside diameter. The outside surface of the assembly will be liquid penetrant inspected in accordance with paragraph 3.4.4. Also, the insulation resistance at room temperature will be tested for compliance with paragraph 3.2.2. Any change in the insulation resistance greater than 5 percent will be cause for rejection.

Section 3.1.2 specifies a premium-grade wire instead of the standard grade specified in IS-121.

Section 3.3 specifies an Inconel sheath.

Section 3.4.2 modifies the swaging requirements and provides for single-conductor material as well as two-conductor.

Section 3.4.5 is an additional requirement.

**6.7.11.4 Standard lead wire.** With a few exceptions, all lead wire in areas external to the reactor and drain cell is unshielded commercial, standard polyvinyl-insulated wire purchased in accordance with the following requirements:

Wire, thermocouple extension, 2-conductor with polyvinyl-polyvinyl insulation. Thermocouple wires shall be T/C grade Chromel-P and Alumel, bright anneal, manufactured by Hoskins Manufacturing Co., Detroit, Michigan. Seller shall certify the T/C wires supplied are as specified and shall provide certified reproductions of Hoskins tags taken from wire coils that furnished the T/C wire. Each wire shall have a smooth, bright finish, shall be free from cracks and slivers, and shall be fully annealed. The emf vs. temperature characteristics of the Chromel-P vs Alumel thermocouple pair shall conform to the standard emf vs temperature curve as established by the National Bureau of Standards (Table 17, NBS Circular 561) within 4°F (± 0.089 mV) over the temperature range from 32 to 400°F. Each conductor shall be #16 AWG, solid wire with polyvinyl insulation not less than 0.020 in. thick, color coded for Chromel-Alumel as per I.S.A. Standards; positive conductor yellow, negative conductor red; overall yellow polyvinyl insulation not less than 0.020 in. thick; maximum overall cross section dimension of fabricated wire shall not exceed 0.230 in. Wire shall be shipped on spools with a continuous length of wire from 4500 to 5000 ft per spool. The total resistance per 100 ft at 68°F shall not exceed 24 Ω. The finished extension wire shall pass the following wet insulation resistance test. A sample not less than 12 in. long selected at random shall be bent at the center on a ½-in.-diam mandrel to form a U-shaped loop with straight sides. The loop shall be immersed in 2 in. of tap water with 180 V DC impressed between conductors (Chromel to Alumel) in series with a current measuring meter. The wet insulation test shall be acceptable when the current measuring meter shows less than 50 mA of current flow after immersion of sample loop for 10 min at 25°C.

In areas where considerations of ambient temperature and radiation precluded the use of polyvinyl insulation and where extraneous electrical noise pickup was not a problem, unshielded, glass-fiber-insulated lead wire is used. This wire consists of two No. 20 AWG (Chromel-P and Alumel) wires, insulated individually and overall with glass-fiber braid, and is thermocouple-grade material having a standard calibration accuracy identical to that listed in Tables I and II of IS-121. This material was purchased through ORNL stores in strict accordance with ORNL Specification IS-122.[8]

In applications, such as the radiator differential-temperature measurements, where the effects of extraneous thermal emf's and electrical noise could not be tolerated, shielded, glass-fiber-insulated thermocouple-grade lead wire was used. This wire is similar to the unshielded glass-fiber-insulated wire described above but is shielded with an overall metallic braid shield. An outer jacket of insulation prevents grounding of the metallic braid shield.

The mineral-insulated lead wire used to connect safety system thermocouples inside the reactor cell to external junction box terminals is thermocouple-grade material of the type described in paragraph 6.7.11.2.

**6.7.11.5 Special lead wire.** Connections between disconnects associated with control-grade thermocouples in the fuel and drain cells and external junction box terminals are made with multiconductor thermocouple lead-wire cables purchased in strict accordance with ORNL Specification JS-81-177.[9] These cables consist of six pairs of Chromel-P and Alumel wires and one copper ground wire, glass-fiber insulated, and enclosed in a ¼-in.-OD copper tube sheath.

The Chromel-P and Alumel wires in the cable are premium-grade materials that are equal, within the temperature limits of 32°F and 530°F, to corresponding materials in the magnesium oxide-insulated, sheathed thermocouples to which they connect (see paragraph 6.7.11.2). All wires, including the ground wire, are No. 22 AWG solid wire.

Individual wires are covered with a double wrap or braid of glass fiber, one wrap in each direction. The

wrap is impregnated with a moisture- and heat-resistant compound (No. 24 cable varnish, Schenectady Varnish Company, or approved equal), colored clear. Chromel-P–Alumel pairs are identified with colored traces in an overall white wrap, and the single copper conductor is colored black.

The conductors are cabled with the copper wire and a matched Chromel-Alumel pair in the core and with five matched Chromel-Alumel pairs laid parallel to each other around the core. The cabled conductors are contained in a 0.010-in.-wall fiber-glass-braid jacket. The jacket is impregnated with a moisture- and heat-resistant compound (No. 1 glass sticker, Schenectady Varnish Company, or equal) and is colored brown. The maximum outside diameter of the cabled conductors is 0.200 in.

This multiconductor cable assembly is enclosed in an outer sheath consisting of a type OF soft-annealed seamless copper tube having an outside diameter of 0.250 ± 0.002 in. and a wall thickness of 0.023 ± 0.002 in. The cable was pulled into the tubing. Application of the tubing by swaging, drawing, or rolling was not allowed.

The finished thermocouple cable assembly was required to have a minimum length of 100 ft and to have no visually detectable gas leaks along the full length of its sheath when pressurized with 100 psig clean, dry, oil-free air and immersed in water for 15 min.

Prior to insertion in the copper tube sheath, the insulated cable was required to pass a wet insulation test in which 180 V was applied between conductors of a sample of cable at least 18 in. long, bent in the center around a 1½-in.-diam mandrel to form a U-shaped loop with straight sides, and immersed in tap water to a minimum depth of 4 in. Current flows in excess of 50 μA after 10 min immersion at 25°C were cause for rejection.

**6.7.11.6 Miscellaneous materials.** Single-thermocouple disconnects used in the reactor coolant system and in similar applications are Thermo Electric type PMSS and JMSS, procured in accordance with IS-160.

Junction box terminal strips are barrier-type ORNL store stock items (Cinch Jones or equivalent). Standard commercial boxes obtained from ORNL stores were used for junction box enclosures where possible. Special boxes were fabricated where standard sizes were not suitable.

### 6.7.12 Developmental Tests

Concurrent with the design and installation of the MSRE thermocouple system, tests were performed to evaluate materials and techniques and to demonstrate the performance of those selected. Results of these tests are summarized below. Additional details are reported in the Molten-Salt Reactor Program Semiannual Progress Report.[10-23]

**6.7.12.1 Drift tests.** Six Inconel-sheathed, magnesium oxide-insulated Chromel-Alumel thermocouples selected from material purchased for evaluation were furnace tested in an air environment at temperatures between 1200 and 1250°F for 18 months. The temperature equivalents of the emf outputs were determined at intervals and compared with that of a calibrated platinum vs platinum–10% rhodium test couple. The calibration of all six thermocouples was within the allowable ⅜% limits at the start of the test, and none drifted more than ±2°F during the test period.

Eight Inconel-sheathed, magnesium oxide-insulated Chromel-Alumel thermocouples randomly selected from MSRE stock were subsequently tested under similar conditions for a period of approximately two years. Results of these tests are shown in Fig. 6.7.27. Not shown in Fig. 6.7.27 are the random drifts of +1.5 to +2.5°F that were observed during the initial nine-day calibration period when the furnace temperature was cycled between 1000 and 1400°F. This initial drift and the subsequent drift during the first 150 days are thought to be due partially to inadequate annealing after fabrication and partially to changes in thermoelectric properties of the portion of the Chromel-Alumel wire material which operated in the temperature region between 700 and 1000°F.

**6.7.12.2 Thermocouple attachments.** *Surface.* A variety of types of surface attachments were fabricated and tested in the instrument development laboratory. Included in these tests were the following types of attachments:

1. sheath brazed directly to INOR-8 surface,
2. sheath brazed to INOR-8 button, button spot-welded to INOR-8 surface,
3. sheath brazed to INOR-8 tab, tab brazed to INOR-8 surface,
4. sheath brazed to INOR-8 tab, tab welded to INOR-8 surface,
5. sheath welded to INOR-8 tab, tab welded to INOR-8 surface.

All braze joints were made with 82% gold–18% nickel alloy. A variety of tab configurations were investigated, including end tabs and both single- and double-wing side tabs. Considerations in the evaluation of candidate attachments were:

1. compatibility with reactor metallurgical requirements,
2. ease of fabrication in shops and field,
3. ruggedness – that is, resistance to forces generated by pulling, prying, bending, and thermal cycling,
4. accuracy of temperature measurement.

The type which most nearly satisfied all requirements was the side-tab all-welded type described in paragraph 7.6.2.

Spot-welded types were rejected for reasons of ruggedness. All types involving brazing to the INOR-8 surface were rejected because of metallurgical requirements and difficulty of field fabrication. After proper techniques were developed, welding of tabs to the sheath was found to be easier than brazing.

*Radiator.* The test rig shown in Fig. 6.7.28 was assembled for use in developmental testing of mechanical attachments for use on the MSRE radiator tubes. A succession of attachments were tested, of which the last was the one used at the MSRE and described in Sect. 6.7.6.3. During the test, the rig was heated to temperatures and subjected to air flows approximating those to be encountered in the MSRE. Results of tests of the selected attachment are presented in Table 6.7.1. In runs 1, 2, 3, and 4, the test couples were insulated with Fiberfrax board. In run 5, the thermocouple was covered with a heat-conducting cement (Thermon X63) and insulated with three layers of $\frac{1}{8}$-in.-thick Fiberfrax paper. Considerable improvements in accuracy were obtained with this combination; however, it was later determined that Thermon was not acceptable for use in the MSRE because of its corrosive effect on INOR-8. (Metallurgical examination of a typical attachment coated with Thermon and heated to 1250°F for a period of five weeks revealed corrosion to a depth of 1 mil on the surface of the INOR-8 tube in contact with the Thermon cement). Subsequent tests on test sections without Thermon showed little difference in errors obtained with Fiberfrax paper and Fiberfrax board insulation. Since the paper form required no machining or preforming prior to installation, it was selected as the preferred type.

**Table 6.7.1. Results of tests of radiator tube thermocouples**

| Run No. | Approximate air flow (fps) | Inner wall temperature (°F) | Test thermocouple temperature (°F) | Temperature difference (°F) |
|---|---|---|---|---|
| 1 | 0 | 996 | 985 | −11 |
| | 90 | 990 | 954 | −36 |
| 2 | 0 | 998 | 984 | −14 |
| | 70 | 935 | 905 | −30 |
| 3 | 0 | 1009 | 996 | −13 |
| | 50 | 1009 | 983 | −26 |
| 4 | 0 | 1009 | 996 | −13 |
| | 50 | 1000 | 972 | −28 |
| 5 | 0 | 1007 | 1002 | −5 |
| | 50 | 1010 | 1001 | −9 |

**6.7.12.3 End seals.** Several sealing and potting materials were tested for use in sealing the ends of mineral-insulated thermocouples and copper-tube-sheathed thermocouple extension cables terminating in disconnects located inside the reactor and drain tank cells and in junction boxes located near penetrations outside the cells. Organic materials were tested for use outside the cells, and inorganic materials were tested for use inside the cells. Materials tested included: Ames Technical-G copper oxide cement, Sauereisen No. 30 ceramic-base cement, Thermostix ceramic-base cement, Ceramacite C-100 ceramic-vitreous enamel compound, Physical Science Company 0900 glaze compound, Araldite epoxy compound, Rayclad Tubes polyvinyl chloride shrinkable tubing, and glass-to-metal seals supplied by the Hermetic Seal Corporation.

No acceptable seals were obtained with the Ames, Sauereisen, and Thermostix materials; either the gas leak rate was too high or the electrical resistivity was too low.

Good seals were obtained with Ceramacite C-100, a ceramic-vitreous enamel material produced by Consolidated Electrodynamics Corporation. In one test, mineral-insulated copper wires, sheathed in a stainless steel tube, were satisfactorily sealed with this material when the copper was protected by a helium atmosphere during curing. Although the curing temperature of the C-100 compound is 1200°F, seals were obtained that were leak-tight to helium and moisture after being subjected to 60 psig water pressure. These seals also withstood a 500-V insulation breakdown test after moisture was dried from the outer surface.

Excellent end seals for metal-sheathed, mineral-insulated thermocouples were obtained with Physical Science Corporation formula 0900 glaze compound. This material is a water-mix compound that adheres to metal and is completely nonhygroscopic when cured at 1550°F for a period of 15 min. Test seals were helium leak-tight with 50 psig applied pressure. Because the 0900 material is brittle when cured, seals made with this material must be handled carefully during installa-

tion and mechanically protected against subsequent damage.

A number of epoxy and glass-to-metal end seals, of the type described in paragraph 7.8.3 for multiconductor extension cable, were fabricated and tested. After proper techniques were developed, seals were obtained which were helium leak-tight with 60 psig applied pressure. Epoxy seals were made with both bare and fiber-glass-insulated wire. It was found that leakage along the wires in insulated wire seals could be prevented by doping the fiber-glass insulation with Duco cement before potting.

A shrinkable tube made by Rayclad Tubes was tested for use in sealing the ends of mineral-insulated thermocouples located outside the reactor and drain tank cell. Test seals made with this material were helium leak-tight at 100 psig.

**6.7.12.4 Engineering test loop installations.** Eight MSRE prototype surface-mounted thermocouples were installed in the ETL facility to determine, under simulated operating conditions, the reliability of attachments and the accuracy of wall temperature measurements taken with thermocouples located on the walls of pipes and components adjacent to heaters. Sheathed $^1/_{16}$-in.-OD single-conductor, two-wire and $^1/_8$-in.-OD sheathed duplex thermocouples were mounted in pairs adjacent to 30-gage bare-wire reference thermocouples at three locations. A similar pair of thermocouples was located adjacent to a reference thermocouple installed in a well at a fourth location. A typical installation is shown in Fig. 6.7.29. Differences in readings between the test thermocouples and their respective reference thermocouples were noted periodically over a three-year period. Limits of the variation in the temperature differences during the first 1500 hr of operation are listed in Table 6.7.2. These limits were not exceeded during the remainder of the three-year test period. The loop temperatures at the point of thermocouple attachment were normally between the limits of 1040°F and 1200°F during the test period; however, a number of cycles from 1200°F to ambient temperature to 1200°F were accumulated as the result of loop shutdowns. All thermocouples were still functioning satisfactorily at the end of the test period.

**6.7.12.5 Pump test loop installations.** Tests were conducted with MSRE prototype surface-mounted thermocouples installed on the pump test loop for the purpose of determining how accurately thermocouples located on the walls of pipes adjacent to heaters measure the temperature of molten salt inside the pipe. Temperature indicated by wall-mounted thermocouples and a well thermocouple in the salt stream were compared at various operating conditions with heaters turned on and off. Figure 6.7.30 shows a schematic of test installations. Figures 6.7.31 and 6.7.32 show the deviation of indicated pipe wall temperature from the indicated salt temperature with heaters turned on and off. Figure 6.7.33 shows the results obtained by turning the box heaters on and off and then adjusting the pump cooling air flow in an attempt to keep the salt temperature constant. Data obtained from these tests indicate the temperature readings of the surface-mounted thermocouples are influenced by the heaters to the extent that the thermocouples could not be used for computation of reactor heat power or for precise measurement of the mean reactor temperature unless the heater power was maintained constant and a correction was made for the bias in the thermocouple reading.

**Table 6.7.2. Variations in readings of thermocouples installed on the engineering test loop**

| Type of reference thermocouple | Station | Outside diameter of test thermocouple (in.) | Limits of variation in temperature difference (°F) |
|---|---|---|---|
| No. 30 AWG bare wire | 1 | $^1/_8$ | +1 to +6 |
| | | $^1/_{16}$ | +1 to +6 |
| | 2 | $^1/_8$ | −2 to +4 |
| | | $^1/_{16}$ | −2 to 0 |
| | 3 | $^1/_8$ | −3 to +5 |
| | | $^1/_{16}$ | −2 to +5 |
| $^1/_8$-in.-OD sheathed, in well | 4 | $^1/_8$ | −5 to −6 |
| | | $^1/_{16}$ | −3 to +6 |

A clear choice of the best type of installation or location did not appear to exist; however, the following general observations were made:

1. Thermocouples in the box heater section appeared to be less affected by heater power than those in the Calrod-heated section.
2. Thermocouples in the box-heated section which were located near the top showed less bias in reading than those located near the bottom but were more affected by variations in heater power.
3. The 30-gage reference couples showed less bias and were less affected by the heaters than other surface-mounted couples. This type is not, however, acceptable for long-term service in the reactor system.

4. The performance of the $^1/_{16}$-in. two-wire, single-conductor couples was slightly better than the $^1/_8$-in. duplex couples. However, the difference was not sufficient to justify the additional cost and effort required for this type of installation except in a few special locations.
5. The thermocouple installed in the well was least affected by variations in heater power.
6. Comparison of the performance of thermocouple T40 with T46 and of T66 with T69 indicates that the addition of insulation over the couples in the box-heated section did not significantly improve their performance.
7. The data presented in Fig. 6.7.33 indicate that the bias in the surface-mounted couples may be a function of pump cooling air flow.

All thermocouples used in these tests were calibrated before installation, and the data presented were corrected to compensate for the deviation of individual thermocouples from standard temperature-emf characteristics.

Observation of the performance of these thermocouples was continued over a three-year period, which ended when the section of pipe on which they were installed was removed from the loop. Logging of data was discontinued after the second year; however, all test thermocouples appeared to be functioning satisfactorily at the end of the test. Several reference couples were lost during the course of the test. Except for several extended shutdown periods, operating temperatures were normally near 1200°F.

**6.7.12.6 Bayonet thermocouple tests.** Ten MSRE prototype wall-mounted thermocouples were installed in the drain-tank bayonet cooler test facility to determine the effects of fast temperature transients on the life of these thermocouples. The thermocouples tested consisted of both $^1/_{16}$-in.-OD sheathed single-conductor, two-wire and $^1/_8$-in.-OD sheathed duplex thermocouples with junctions grounded to walls and end seals. These thermocouples were subjected to rapid temperature changes between 1350°F and 200°F at 1-hr intervals. All but three thermocouples failed during the test. One failed at 6 cycles, one at 900 cycles, two at 1600 cycles, one at 2049 cycles, and two at 2630 cycles. When the bayonet tubes were removed, it was observed that the sheaths of several thermocouples were broken at one or more points along the portions of their length which had been subjected to thermal shock.

**6.7.12.7 Freeze valve thermocouple tests.** Six MSRE prototype wall-mounted thermocouples were installed on a freeze valve in a test conducted to determine the durability of these units in this type of service and to determine the accuracy of the measurement of wall temperature at the cooled and heated area of the valve. Sheathed $^1/_{16}$-in.-OD single-conductor and $^1/_8$-in.-OD duplex thermocouples were mounted in pairs adjacent to a 30-gage bare-wire reference thermocouple at three locations on the valve. The locations and methods of attachment are shown in Fig. 6.7.34. The test thermocouples agreed with the reference thermocouples, except that during rapid heating and cooling, differences of 15 to 20°F in temperature readings were noted. All the thermocouples were still functioning after two weeks of intermittent operation of the valve. No significant difference in the performance or desirability of the $^1/_{16}$-in. single-conductor and $^1/_8$-in. duplex thermocouples was noted.

In subsequent freeze valve tests, an undetermined but appreciable number of thermal cycles were accumulated on these and other thermocouples. Performance was generally satisfactory. The main purpose of the latter tests was to determine the best locations for the thermocouples, to develop control techniques, and to demonstrate freeze valve operation.

**6.7.12.8 Radiation damage tests.** To determine the effects of radiation on typical in-cell components of the MSRE thermocouple system, the assembly shown in Fig. 6.7.35 was exposed to a $10^6$-R/hr $^{60}$Co gamma source for a period of eight months. Total accumulated radiation dosage was $5.6 \times 10^9$ R. Components of the assembly included a copper-sheathed multiconductor extension lead cable, sealed at both ends with glass-to-metal seals; a disconnect; and sections of sheathed mineral-insulated thermocouple material sealed with Physical Science Corporation 0900 glaze compound and with polyvinyl chloride shrinkable tubing. Insulation resistance was checked periodically with a 500-V Megger, and pressure in the extension lead cable was monitored with a gage. During the eight-month test period the insulation resistance between a typical thermocouple circuit and ground decreased from $5 \times 10^6$ Ω to $2 \times 10^6$ Ω, and a continual buildup of pressure in the sheathed cable assembly was noted, which indicated a possible outgassing of organic filler material in the fiber-glass insulation. Although the gas was slightly radioactive and the pressure buildup could damage the cable unless relieved, it was decided that the outgassing could be tolerated if provisions were made to routinely vent the cables to the containment air stack.

The polyvinyl chloride shrinkable tubing began showing physical damage after seven weeks of exposure. Also tested at this time were epoxy seals of the type

described in paragraph 6.7.8.3. Figure 6.7.36 shows epoxy seals before and after seven weeks exposure.

In subsequent tests, specimens of Mica-Temp and Super-Temp radiation-resistant ceramic-insulated wire were sealed in copper tubes and irradiated in the same facility for a period of six months. Gas pressure buildup was also observed in these assemblies until the end of the test; however, no change in resistivity of wire insulation was observed.

**6.7.12.9 Coolant salt radiator differential temperature thermocouples.** Tests were conducted on thermocouple and extension lead-wire materials used in the differential temperature thermocouple installation on the MSRE coolant salt radiator to determine how much mismatch of materials could be tolerated without incurring excessive error in the computed reactor heat power signal. Since a 5% accuracy in the overall heat power measurement was required and since a number of factors, including the flowmeter accuracy and the accuracy of various electronic components, as well as the accuracy of the thermocouples, contribute to the overall accuracy of the heat power computation, an arbitrary maximum inaccuracy of 2½% was assigned to the $\Delta T$ measurement. A 2½% error in temperature measurement corresponds to an error in the emf produced by the thermocouple circuits equivalent to 2°F. Laboratory test results showed that, under certain conditions of mismatch between thermocouple and extension lead-wire materials, error voltages equivalent to as much as 2°F can be generated in a single junction when the temperature of the junction is varied over the range from 32 to 150°F. Since several junctions are involved, the need for careful design and matching of material was apparent, and the design of the MSRE installation was revised to obtain the maximum possible cancellation of junction effects. Additional error voltages can be produced by variations in ambient temperature if the thermocouple lead-wire material is not perfectly homogeneous. Tests performed at the MSRE showed that such effects were present in the MSRE thermocouple lead-wire installation and that excessive noise was present on the signal. The existing lead wire was replaced with a continuous run of higher-quality shielded lead wire. Tests performed after the shielded lead wire was installed indicated that the long-term drift previously observed had been eliminated but that excessive intermittent noise was still present. The thermocouple lead wire was then insulated to eliminate ground loops. Further tests showed that the noise had been eliminated.

**6.7.12.10 Thermocouple disconnects.** Disconnects of the type described in paragraph 6.7.7 operated satisfactorily when tested in a remote maintenance facility.

### 6.7.13 MSRE Performance

**6.7.13.1 Mechanical reliability.** During the period between the start of operational checkout in late 1964 and April 1968, the reactor was at temperatures above 900°F for 20,000 hr and accumulated 11,500 hr of nuclear operation. During this period there were only 12 failures out of the 1142 thermocouples installed. Five of these failures occurred as a result of physical damage during construction and operation. Sixty-nine of the 1142 total thermocouples are installed in the fuel processing system and had seen little service as of April 1968. Of the remaining 1073 thermocouples, 866 normally operated at temperatures above 1000°F.

A breakdown on the various types of failures is tabulated below:

| | |
|---|---|
| Damaged during construction | 3 |
| Damaged during maintenance | 2 |
| Open circuit | 3 |
| Disconnect failure | 2 |
| Abnormally low reading (detached) | 2 |

This excellent reliability is believed to be the result of attention to detail during the design, procurement, fabrication, and installation of all parts of the thermocouple system and, in particular, is the result of the design of the weld attachments, end seals, and disconnects and of the quality control measures taken during the procurement and fabrication of the thermocouples. The conscientious efforts of the construction and maintenance crews in avoiding damage or disturbance to previously installed thermocouples also contributed to the reliability.

**6.7.13.2 Accuracy.** Approximately 330 thermocouples are used to measure the temperature at various locations on the fuel and coolant circulating salt systems. Only two thermocouple wells are provided, one each in the coolant radiator inlet and outlet pipes. The remaining thermocouples are attached to the pipe or vessel walls. The thermocouples on the radiator tubes are insulated to protect them from the effects of the high-velocity air that flows over them during power operation; the others are not insulated and thus are subject to error because of exposure to heater shine and to thermal convection flow of the cell atmosphere within the heater insulation. In March 1965, with the fuel and coolant systems circulating salt at isothermal conditions, a complete set of readings was taken from all the thermocouples that should read the temperature of the circulating salt. A similar set of data was taken in June 1967 at the start of run 12. The results of the two sets of measurements are shown in Table 6.7.3.

Comparison of the standard deviations for the radiator thermocouples with those for the other thermo-

**Table 6.7.3. Comparison of readings of thermocouples of salt piping and vessels taken with the salt isothermal**

| Thermocouple location | Indicated temperature (°F) | |
|---|---|---|
| | March 1965 | June 1967 |
| Radiator tubes | 1102.6 ± 6.7 | 1208.5 ± 3.3 |
| Other | 1102.1 ± 13.0 | 1206.7 ± 12.3 |
| All | 1102.3 ± 10.6 | 1207.4 ± 9.8 |

couples shows the effect of insulation on reducing the scatter. Comparison of the sets of data taken over two years apart shows very little change, certainly no greater scatter. Figure 6.7.37 shows that the statistical distribution of the deviations of individual thermocouples from the mean also changed little in the two years.

The scatter in the various thermocouple readings is reduced to an acceptable level by using biases to correct each reading to the overall average measured while both fuel and coolant systems are circulating salt at isothermal conditions. These biases are entered into the computer and are automatically applied to the thermocouple readings. The biases are revised at the beginning of each run and are checked when isothermal conditions exist during the run. Generally, the biased thermocouple readings have been reliable, but there have been a relatively few cases when there have been shifts in thermocouple readings that have resulted in calculation errors.

### References


1. ORNL drawing A-AA-B-40511, Molten Salt Reactor Experiment – Reactor Process Systems, Thermocouple Tabulation.
2. J. W. Murdock, "Power Test Code Thermometer Wells," *J. Eng. Power* (*Trans. ASME*), October 1959, pp. 403–16.
3. *ASME Power Test Codes*, Supplement on Instruments and Apparatus, Part 3, P.T.C. 19.3-1961, Chap. 1, pp. 7–9.
4. ORNL Specification IS-124, Thermocouple Assembly, Chromel-P and Alumel Wires, Magnesium Oxide Insulation, Stainless Steel Tube Sheathed.
5. ORNL Specification IS-121, Thermocouple Material, Chromel-P and Alumel Wires, Magnesium Oxide Insulated, Stainless Steel Sheathed.
6. ORNL Specification IS-160, Thermocouple Connectors and Panels.
7. ORNL Specification IS-502, Thermocouple Material, Chromel-P and Alumel Conductors, Magnesium Oxide Insulated, Nickel-Chromium-Iron Alloy Tube Sheathed.
8. ORNL Specification IS-122, Thermocouple Material, Chromel-P and Alumel Wires, Non-insulated or Glass-Fiber Insulated, Non Sheathed or Stainless Steel Tube Sheathed.
9. ORNL Specification JS-81-177, Thermocouple Cable, Multiconductor, Chromel-P/Alumel Wires, Glass Fiber Insulated, Copper Tube Sheathed for the Molten Salt Reactor Experiment.
10. *MSRP Semiannu. Progr. Rep. Feb. 28, 1961*, ORNL-3122, pp. 59–62.
11. *MSRP Semiannu. Progr. Rep. Aug. 31, 1961*, ORNL-3215, pp. 78–80.
12. *MSRP Semiannu. Progr. Rep. Feb. 28, 1962*, ORNL-3282, pp. 58–59.
13. *MSRP Semiannu. Progr. Rep. Aug. 31, 1962*, ORNL-3369, pp. 74–83.
14. *MSRP Semiannu. Progr. Rep. Jan. 31, 1963*, ORNL-3419, pp. 46–48.
15. *MSRP Semiannu. Progr. Rep. July 31, 1963*, ORNL-3529, pp. 56–57.
16. *MSRP Semiannu. Progr. Rep. Jan. 31, 1964*, ORNL-3626, pp. 42–44.
17. *MSRP Semiannu. Progr. Rep. July 31, 1964*, ORNL-3708, pp. 115–18.
18. *MSRP Semiannu. Progr. Rep. Feb. 28, 1965*, ORNL-3812, pp. 18, 43, 44, 47.
19. *MSRP Semiannu. Progr. Rep. Aug. 31, 1965*, ORNL-3872, pp. 73–74.
20. *MSRP Semiannu. Progr. Rep. Feb. 28, 1966*, ORNL-3936, p. 79.
21. *MSRP Semiannu. Progr. Rep. Aug. 31, 1966*, ORNL-4037, p. 58.
22. *MSRP Semiannu. Progr. Rep. Feb. 28, 1967*, ORNL-4119, pp. 19, 72.
23. *MSRP Semiannu. Progr. Rep. Aug. 31, 1967*, ORNL-4191, pp. 22–24, 47.
24. *Cross Reference Listing of MSRE Instrumentation and Control System Drawings*, ORNL-CF-63-2-2, Rev. 3, pp. 7–13, 21–23.


## 6.8 BUBBLER LEVEL SYSTEM

### 6.8.1 Introduction

During the early stages of the MSRE design there was no proven method of measuring levels of molten salt which was considered suitable for use in reactor systems. Although point-contact indication was ade-

quate for some MSRE level measurement (see Sect. 6.10 and 6.11), a continuous indication of fuel and coolant pump bowl level over the measurement range was needed. Prior to 1960, attempts had been made to obtain continuous measurement of molten-salt level with bubbler- and resistance-type systems.[1,2] Both efforts were only partially successful. The resistance sensors performed well initially but had excessive drift,[1] and the bubblers were plagued with dip-tube plugging.[2] Another type of level sensor, which offered promise for continuous measurement of molten-salt level, was a float-type transmitter developed for use in measuring liquid metal levels in the ANP program.[3] After review of the previous experience, two systems, the bubbler and the float type, were selected for further development, and provisions were made in the initial MSRE design for installation of either or both of these systems. Some consideration was given to development of the resistance-type sensor, but this approach was abandoned when further attempts to determine the reason for the excessive drift previously experienced were unsuccessful. Some of the principles of the resistance-type continuous-level element are, however, embodied in the design of the conductivity-type single-point level probe discussed in Sect. 6.10.

Development of both bubbler- and the float-type systems was successfully completed, and the performance and reliability of both systems were successfully demonstrated on a level test facility and on engineering test loops. The bubbler-type system is presently used to measure level in both the fuel and coolant pump bowls.[4] A float-type system is also used to measure coolant pump bowl level. The bubbler system used in the MSRE is described below, and the float-type system is described in Sect. 6.9. A comparison of the bubbler and float level systems is also presented in Sect. 6.9.

### 6.8.2 System Description and Theory of Operation

A simplified diagram of the fuel pump bubbler system is shown in Fig. 6.8.1. The basic operation of the system is the same as that of conventional dip-tube bubbler systems in that the level signal is obtained by measuring the differential between the pressure in the gas space above the molten salt and the pressure inside the dip tube. When the tube is purged with a small gas flow and the salt density is maintained constant, the differential pressure produced is proportional to the height of salt above the bottom of the dip tube.

The MSRE installation presented special problems not found in a conventional installation because (1) the bubbler system piping communicates with the primary system and forms a possible escape path for radioactive gases and (2) the system could fail if pressure transients in the reactor pump bowl forced molten salt into the cold purge piping external to the pump bowl. In the present system design, containment of radioactive materials is effected by placing double check valves and block valves in each purge line and by enclosing the valves and all lines and equipment downstream of the check valves in a secondary containment vessel. Plugging of the purge lines with salt during pressure transients is prevented by maintaining the volume of the purge lines downstream of the check valves as small as is permitted by pressure drop considerations and by installing a surge pot having a volume ten times that of the purge lines in the heated zone adjacent to the dip tube. The present system is designed to withstand a 60-psig pressure increase from 6 psia without plugging the purge lines. The surge pot is a toroidal pipe inside the pump bowl.[5]

A capillary restrictor located upstream of the check valves serves a double purpose of providing a means of flow measurement and of preventing back diffusion of radioactive gas into operating areas. The purge rate is controlled by throttling valves. Deviation of the purge rate from the design value is detected by pressure switches installed upstream of the capillaries. This method of flow measurement assumes that the pump bowl pressure is constant. Since the pump bowl pressure is relatively constant during normal operations and the flow is not critical, the accuracy obtained is adequate for the purpose. Solenoid valves installed downstream of the capillaries provide a means of checking the zero calibration of the differential pressure transmitter. The solenoid valves are also used to block the lines on a signal from the safety control circuitry. The differential pressure transmitters, weld-sealed solenoid valves, and restrictors used in this system are described in Sects. 6.8, 6.19, and 6.20.

Two types of dip tubes are used in the MSRE. The dip tubes in the fuel pump are open-ended, with a small V notch cut in the side, while the dip tubes in the coolant pump bowl have a closed end with a $\frac{1}{8}$-in. hole through the side of the tube just above the bottom closure. There is no appreciable difference in the operating characteristics of the two types. Both types were operated satisfactorily in a prototype pump test installation, and the V notch was selected as the preferred type. However, the coolant pump was completed before the fabricators received the revised drawings. The consideration involved in selecting the V notch as the preferred type was not of sufficient importance to warrant opening the pump, and since the

coolant pump was also equipped with a ball-float level transmitter of the type described in Sect. 6.9, the preferred V-notch dip tube was not used in the coolant pump.

### References

1. R. F. Hyland, *Test of a Resistance-Type High-Temperature Sensor for Continuous Measurement of Salt Level in the Molten Salt Fueled Reactors,* ORNL-TM-331 (Aug. 21, 1966).

2. Ibid., p. 56.

3. A. L. Southern, *Closed-Loop Level Indicator for Corrosive Liquids Operating at High Temperatures,* ORNL-2093 (May 17, 1956).

4. ORNL drawing D-AA-B-40501, Instrument Application Diagram, Coolant Salt System.

5. *MSRE Design and Operations Report, Part I, Description of Reactor Design,* ORNL-TM-728, p. 13, Fig. 2.3, MSRE Fuel Pump.

## 6.9 BALL-FLOAT-TYPE MOLTEN-SALT LEVEL TRANSMITTER

### 6.9.1 Introduction

The high-temperature ball-float-type molten-salt level transmitter transmits an electrical signal that is proportional to the level of the molten salt in the coolant-salt pump bowl of the Molten-Salt Reactor Experiment. This electrical signal is transmitted to a Foxboro Dynalog recorder-transmitter, which, in turn, retransmits a pneumatic signal proportional to the incoming electrical signal. The pneumatic signal operates an indicator on the main control panel in the reactor control room and may be connected by means of solenoid valves either to a molten-salt level recorder or to high- and low-level alarm switches at the discretion of the reactor operator (see Sect. 3.3).

As discussed in the preceding section (6.8), the ball-float transmitter was developed to serve as an alternate to the bubbler level system, and provisions were made in the initial MSRE design for installation of either or both types of systems. Because of physical space limitations, it was not possible to install a float-type transmitter on the present fuel pump bowl; however, a float-type transmitter has been incorporated in the design of the Mark II replacement pump. The Mark II pump level transmitter differs from the transmitter described below in that the ball float is located in a stilling well inside the pump bowl and has a range of 7.5 in.

### 6.9.2 System Description

The float level indicator system, shown schematically in Fig. 6.9.1, consists of a float-positioned INOR-8-clad Armco iron core, a high-temperature low-impedance radiation-resistant differential transformer, a weld-sealed float chamber, and a modified Foxboro Dynalog recorder with pneumatic retransmission. The float chamber, which is separately mounted beside the pump bowl and attached to it by piping, contains the INOR-8 float and the INOR-8- clad iron core. The differential transformer is mounted above the chamber, outside the containment, and operates at or near system temperature (900 to 1300°F). This transformer detects the position of the core and transmits a signal proportional to level. Since the core position is detected magnetically, no penetration of containment is required. The Foxboro Dynalog contains an excitation system for the differential transformer; the amplifiers and balance system for the recorder; the null balance, phasing, and range controls for the differential transformer; and the pneumatic transmitter that transmits a 3 to 15- psi signal proportional to the recorder pen position. This instrument is mounted in the transmitter room. The Foxboro Dynalog is connected to the differential transformer with a four-conductor, shielded cable. The pneumatic signal from the Foxboro Dynalog is connected to the main control panel through solenoid valves which allow the reactor operator to select this system or the bubbler system to control the level indicator on the main control panel (see Sect. 3.3).

### 6.9.3 Construction

Figure 6.9.2 shows the major components of the float level system before installation of the float and core assembly in the float chamber and with the differential transformer removed from its enclosure.

With the exception of the differential transformer, the float, and the float chamber, all components of this system are standard commercial items. Since the transformer is in contact with the float chamber and is very near the pump bowl, it is directly exposed to high temperatures, and in the Mark II pump installation, it is exposed to high levels of nuclear radiation. The Armco iron core is also exposed to high levels of temperature and radiation, and both components are required to operate dependably for two years or more in this environment.[1] Although differential transformers were commercially available which were suitable for short-term operation at 1200°F and radiation-resistant transformers had been developed at ORNL for 600°F

service,[2] none of these were suitable for use on the ball float transmitter,and it was necessary to develop the special type needed. The transformer shown in Figs. 6.9.2 and 6.9.3 is the result of this development program. This transformer is 10 in. long, the iron core is 5 in. long, and the range of the level indicator is 5 in. The iron core is contained in the long tube shown attached to the float in Fig. 6.9.2.

The materials of which this transformer is constructed are Lava "A"[3] pure nickel wire, Fiberfrax insulation,[4] and INOR-8.[5] All of these materials have good high-temperature characteristics and do not deteriorate significantly when exposed to high levels of nuclear radiation for long periods.

The primary and secondary of the differential transformer are wound in grooves machined in a Lava "A" sleeve as shown in Figs. 6.9.3 and 6.9.4. Each consists of a single-layer low-impedance winding of approximately 230 turns of No. 24 nickel wire. The secondary of the transformer is wound differentially so that the turns on one half of the transformer are wound in a clockwise direction and the turns on the other half in a counterclockwise direction. The primary is wound in one direction only. After the primary and secondary are wound, the transformer is assembled by fitting the two winding sleeves together with a third outer sleeve as shown in Fig. 6.9.2.

The physical relationship between the components of the differential transformer and between the differential transformer and the molten-salt system is shown in Fig. 6.9.5. The three layers of INOR-8 that are between the iron core and the transformer primary and secondary have negligible effect on transformer operation. This is because of the high electrical resistivity, the low temperature coefficient of resistivity, and the nonmagnetic characteristics of INOR-8. The three Lava "A" transformer sleeves are shown with the Fiberfrax insulation surrounding them. The Fiberfrax provides mechanical isolation and prevents any direct and possibly destructive contact between the transformer can and the relatively fragile transformer. The wires used to wind the primary and the secondary of the transformer are left long enough to reach a junction box several feet from the transformer. These wires are insulated by ceramic beads and pass through a ½-in. OD tube from the transformer can to the junction box. In Fig. 6.9.2, the beaded wires can be seen coiled at the end of the transformer.

After assembly and before being sealed in the INOR-8 can, the transformer is electrically balanced by removing windings from the primary or secondary or by moving one winding in relation to the other. The transformer may then be fired by placing it in a furnace and raising its temperature to approximately 1500°F. At this temperature the Lava "A" starts to fire and, in doing so, changes dimensions with the result shown in Fig. 6.9.4. This change effectively locks the sleeves together and prevents any relative movement between them that would destroy the results of the previous electrical adjustments.

After the transformer has been fired and tested, it is "canned" for protection in an INOR-8 container as shown in Fig. 6.9.5. After this it is again heated, this time to the expected operating temperature, and tested. If this test is successful, the transformer is ready for use.

The float and the float chamber are constructed of INOR-8 and are designed to withstand 75 psig pressure at 1200°F.

### 6.9.4 Theory of Operation

In operation, the float-positioned iron core varies the magnetic coupling between the primary and the secondary windings of the transformer as it moves from one position to another.

The induced voltage to the two halves of the secondary of the transformer will vary in direct relation to the position of the iron core. When the windings of the transformer are properly balanced, the voltages induced in the two halves of the secondary are 180° out of phase. Thus, when the voltages induced in each half of the secondary are equal, their sum is zero, and the signal output of the transformer is zero. This will be the case when the iron core is positioned in the transformer at a point equally distant from the ends of the transformer. This is commonly called the null or centered position of the core. If the induced voltages are not equal, as is the case when the iron core is nearer one end of the transformer than it is the other, the output signal is the algebraic sum of the two voltages and is in phase with the larger of the two. As discussed in Sect. 5.2.1.3, the Foxboro Dynalog compares the phase of this output signal with the phase of the voltage generated by the internal excitation oscillator to determine the direction of movement of the recorder pen. The amplitude of the signal voltage determines the magnitude of pen movement from the zero signal voltage, or null, position.

With the exception of portions of the input circuitry, the Foxboro Dynalog recorder is a standard instrument and operates in the manner described in Sect. 5.2.1.3. The Dynalog input circuit shown in Fig. 6.9.6 is a standard circuit which has been modified to match the

low impedance of the differential transformer to the output impedance of the Dynalog excitation oscillator and to provide means of balancing out residual signals resulting from stray capacitances.

The 1000-Hz signal required to excite the differential transformer primary is obtained from winding B on the oscillator distribution transformer (T1). Windings C and D provide excitation for the internal bridge and a reference voltage for the phase-sensitive detector.

A step-down transformer (T2) is used to match the low impedance of the differential transformer primary to the output impedance at winding B. Exact impedance matching is not obtained and is not desirable. The turns ratio of transformer T2 was selected so that the oscillator will not be overloaded under conditions of maximum load. The resistance of the differential transformer primary is 15 Ω at room temperature and increases to 40 Ω at 1250°F. The oscillator loading will, therefore, be highest when the differential transformer is at room temperature and will decrease as the transformer temperature increases. Although variations in loading affect the amplitude of the oscillator voltage, the resultant changes in differential transformer excitation and output are offset by corresponding changes in the internal bridge excitation, and there is no net effect of loading on the span of the instrument.

The center-tap-grounded resistance networks connected across the primary and secondary of T2 and the Faraday shields in transformers T1 and T2 minimize the magnitude of voltages capacitively coupled through T1 and T2 and induced in the transformer leads.

The residual balance network connected across the secondary of T2 is used for rejection of residual (quadrature) voltage resulting from unbalance of capacitance between the primary and secondary of the differential transformer and from incomplete shielding in transformers T1 and T2.

Phase shifts between the internal bridge and differential transformer output voltages, which occur predominantly in the differential transformer, are corrected by the output phase adjustment.

The instrument span is determined by the resistances in the internal bridge and by the setting of the span potentiometer.

Zero adjustment is accomplished by unbalancing the internal bridge.

In the MSRE system, the recorder is adjusted so that the pen will rest at center scale (50 division mark on a 0 to 100 division chart) when the iron core is in the center of the transformer. Under these conditions, the signal output of the transformer is zero. The transformer is positioned so that the center, or null, position of the iron core is a point midway between the upper and lower limits of the measurement range, and the recorder span is adjusted so that the recorder pen moves from zero to full scale as the float-positioned core moves from a position 2.5 in. below the null position in the transformer to a point 2.5 in. above the null position. In this manner the full (5 in.) span capability of the differential transformer is utilized. After this initial adjustment, minor trimming adjustments or range changes can be accomplished using the recorder span and zero adjustments.

Changes in temperature between 1000 and 1250°F have little effect on the sensitivity or range of the level indicator.[6] Tests of this level indicator in a level test loop designed for this purpose[7] showed no appreciable change in these characteristics over a period of three years. Test data indicated that an accuracy of ±0.1 in. over the temperature range from 900 to 1300°F can be expected.[8]

### 6.9.5 Comparison of Ball-Float and Bubbler Systems

Both the bubbler and the ball-float systems are considered to be suitable for the MSRE pump bowl level application and for future applications in molten-salt reactors. Each type has certain advantages and disadvantages which must be considered before using either type in reactor systems. The bubbler system offers the advantage of simplicity of in-cell construction and essentially unlimited range capability. The absence of moving parts in the portion of the bubbler system inside the cell eases the problem of remote maintenance; however, the bubbler supply lines form a possible escape path for radioactive materials, and obstruction of these lines with frozen salt will result in serious errors or in complete failure. Although the bubbler system is basically simple, the auxiliary devices and instrumented closures required to maintain containment and prevent salt plugging make this type of system relatively complex and expensive. Another disadvantage of the bubbler system is that it is sensitive to pressure transients and will produce erroneous information if the rate of pressure rise is excessive. (In the MSRE system, errors will occur if this rate exceeds 8.5 psi/sec.)

Since the ball-float system detects level magnetically through the walls of a nonmagnetic tube, piping or electrical penetrations of the walls of the salt-containing system are not required; the transmitter body can be completely weld-sealed, and no auxiliary devices or systems are required to ensure containment. The salt-plugging problem does not exist in the ball- float

system, and pressure effects are negligible. However, the float-type system is inherently limited to applications where the level measurement span is low, and since the ball-float transmitter contains components which are conceivably subject to failure, provisions must be made for remote maintenance when the transmitter is installed inside secondary containment.

Since the principles of operation and construction of the ball-float and bubbler systems are different, the possible modes of failure of the primary sensors in these systems are unrelated.

This diversity of failure modes can be used to advantage in the design of reliable systems. If the reliabilities of the two types of systems are comparable, a higher degree of reliability can be obtained by using both types of systems as redundant pairs than would be obtained by using two identical systems of either type as redundant pairs.

Additional information on the ball-float-type level transmitter is shown on the MSRE construction drawings.[9–15]

### References


1. "What Happens to Magnetic Properties of Core Materials at Elevated Temperatures?" *Electronic Design,* May 11, 1960, pp. 56–59.
2. R. L. Moore, "The Differential Transformer in High-Temperature Nuclear Radiation Environments," *ISA Proceedings,* 2nd National Nuclear Instrumentation Symposium, June 1959.
3. Lava "A". Aluminum silicate, vitreous material. A product of American Lava Corporation.
4. Fiberfrax. An alumina-silica fiber ($Al_2O_3$, $SiO_2$).
5. *MSRE Design and Operations Report, Part IV, Chemistry and Materials,* ORNL-TM-731.
6. *MSR Program Progr. Rep. Aug. 31, 1961,* ORNL-3215, p. 72.
7. *MSR Program Progr. Rep. Feb. 28, 1962,* ORNL-3282, p. 64–65.
8. *MSR Program Progr. Rep. Aug. 31, 1961,* ORNL-3215, p. 70.
9. ORNL drawing D-AA-B-40501, Instrument Application Diagram, Coolant- Salt System.
10. ORNL drawing D-HH-B-41644, Transmitter Control Room Control Panel, Panel 8, Pneumatic Diagram.
11. ORNL drawing E-HH-Z-55506, Coolant Pump Float Level Indicator, Assembly.
12. ORNL drawing D-HH-Z-55507, Coolant Pump Float Level Indicator, Float Assembly and Details.
13. ORNL drawing D-HH-Z-55508, Coolant Pump Float Level Indicator, Details.
14. ORNL drawing D-HH-Z-55570, Pump Bowl Salt Level Indicator, High-Temperature Radiation-Resistant Differential Transformer, Assembly and Details.
15. ORNL drawing D-HH-Z-55571, Pump Bowl Salt Level Indicator, High-Temperature Radiation-Resistant Differential Transformer, Winding Sleeve Details.


## 6.10 CONDUCTIVITY-TYPE SINGLE-POINT MOLTEN-SALT LEVEL PROBE

### 6.10.1 Introduction

The electrical-conductivity-type single-point molten-salt level probes in the drain tanks of the Molten-Salt Reactor Experiment are installed for the purpose of checking the calibration of the drain tank weigh cells. Each tank has two single-point probes with a common excitation system. These single-point indicators are positioned in each tank so that signals will be generated when the tank is filled to 10% and to 90% of its volume.

The weigh cells on each tank are used to indicate continuously the weight of the molten salt in the tank. This weight can be used, with corrections for temperature, to calculate the volume of molten salt in the tank. With the tanks empty, these cells can be calibrated directly by the use of known weights placed on the tanks, but once the tanks are filled the recalibration of these cells is, for all practical purposes, impossible. For this reason it was deemed necessary to install in each tank two fixed- point level indicators that would not be affected by environmental changes, but would repeat accurately the level of the molten salt in the drain tanks, when the molten salt was at these fixed points, as calibration check points for the weigh cells.

In similar applications, the spark plug probe[1] has been used as a single-point level indicator, but this device has several inherent characteristics that made it undesirable for the MSRE installation. As the spark plug probe is a high-impedance device, with an insulator that must isolate the probe from the grounded tank wall, any vapor-deposited material on the insulator will tend to form a conducting path around the insulator and render the level probe inoperative. Also, the seal around the insulator, which must be part of the containment vessel, would always be questionable. These deficiencies can be tolerated in nonnuclear applications since the probe is easily replaceable in most cases and since small seal leakages can sometimes be tolerated. Replacement of probes in the Molten-Salt Reactor Experiment would, however, be very difficult,

and absolute leak-tightness must be maintained over long periods of time. Also, the process of opening the containment for replacement of probes would present the possibility of radioactive contamination of the surrounding area and of oxygen contamination of the molten salt in the tank. To meet the requirements of the MSRE, a single-point level indicator was developed that would not be affected by any deposited material, could be permanently welded into the system without the need for gasketed seals, and could be expected to have a dependable operating life equal to the useful life of the drain tank.

### 6.10.2 Physical Construction of Probe

The conductivity-type single-point molten-salt level indicator used in the Molten-Salt Reactor Experiment has three electrical circuits: an excitation circuit and two signal-generating molten-salt level-sensing circuits. Figure 6.10.1*A* is a simplified cutaway that shows the manner in which the two single-point level-sensing elements, using a common excitation circuit, are assembled. This is the type of instrument installed in the drain tanks. The section indicated by $R_1$ is the common excitation element mentioned above, and the sections indicated by $R_2$ and $R_3$ are the signal-generating elements for the high- and low-level indicators respectively. The plate at the lower end of each element is the contact that senses the presence of the molten salt. Figures 6.10.2 and 6.10.3 are photographs of a level indicator before assembly was completed. On the left in both photographs is the mounting head with the insulators for the electrical curcuits. Figure 6.10.3 is a close-up of the head. The insulators used to bring out the signal and excitation circuit wires and to seal the tubes that extend into the drain tank can be plainly seen. To the right of the head, in both photographs, is the excitation plate. This is shown more clearly in Fig. 6.10.3. To the right of the excitation plate in Fig. 6.10.2 is the high-level sensing plate. Note that each sensing plate is independently suspended from the excitation plate. The tubing that supports the low-level plate does not touch the high-level plate but passes through holes machined in this plate. The spacer maintains the separation of these tubes to prevent contact with the high-level sensing plate.

### 6.10.3 Theory of Operation

Figure 6.10.1*B* is a simplified electrical schematic that explains the theory of operation of the level indicator. The excitation voltage $V_1$ is generated by a 1-kHz current $I_1$ from a 150-VA fixed-frequency excitation power supply, flowing through the resistance $R_1$ of the excitation circuit. Because of the extremely low impedance of this circuit, approximately 0.030 Ω, an impedance-matching transformer is inserted between it and the excitation power supply. Molten-salt level is determined by measuring the voltage $V_2$ between the excitation plate EP and the high molten-salt level sensing plate $SP_2$, or the voltage $V_3$ between the excitation plate and the low molten-salt level sensing plate $SP_3$. Both level-sensing circuits operate in an identical manner; therefore, for the sake of simplicity, only the operation of the low-level sensing plate, $SP_3$, will be explained.

When the level of the molten salt is below the sensing plate $SP_3$, there is no current flow in the tube $R_3$, connecting the sensing and excitation plates, and except for small residual noise potentials, the voltage difference between the sensing plate and the excitation plate is zero. When the molten salt touches the sensing plate, a current $I_3$ will flow from the excitation plate EP to the sensing plate $SP_3$, then through the molten salt to the tank wall. The flow of current through the resistance of the tube walls results in a voltage difference $V_3$ between the excitation and the sensing plates. Thus, a 1-kHz millivolt-level signal is produced that indicates contact between the molten salt and the sensing plate. The magnitude of the signal will vary with excitation, with the length of the signal generating section between the excitation plate and the sensing plate, and with the conductivity of the molten salt. The signal voltages measured at the Molten-Salt Reactor Experiment have been approximately 80 MV for the high-level probe and approximately 350 MV for the low-level probe, with a background noise level less than 3 MV. It should be noted that there may be a slight difference in the molten-salt level at which contact between the sensing plate and the molten salt is completed or broken. This difference is due to the adhesion of molten salt to the sensing plate when the level is lowered below the plate. Measurements indicate that this difference can be as great as 0.125 in. In very large diameter tanks, this could be an appreciable quantity of liquid and should be considered in any weight or volume calculations in which the single-point level indicator is used as a reference.

The millivolt signal generated by the probe is amplified and used to operate a relay that controls a light on the main control board. The condition of this light indicates whether molten salt is or is not in contact with the sensing plate. The relay amplifier used is frequency sensitive for 1 kHz and has a manual set

point adjustment that will allow the set point, or trip point, to be adjusted to operate anywhere in the range of 5 to 50 MV. The amplifier input circuit is protected by a double Zener diode which prevents misoperation of the amplifier at signal levels above 50 MV. Figure 6.10.4 is a block diagram of a complete circuit for one level sensing plate from sensing plate to panelboard light. Note that each sensing plate has its own matching transformer, amplifier, relay circuit, and panel light.

### 6.10.4 Alarm Amplifier Chassis

Figures 6.10.5 and 6.10.6 are photographs of the front and back of the ten-channel alarm chassis. Each alarm amplifier can be removed from the chassis for service as shown in Fig. 6.10.5. Figure 6.10.6 is a rear view that shows the connectors for power, signal, and relay contacts. Figure 6.10.7 is a photograph of an alarm amplifier removed from the main chassis. Plug-in-type relays with octal base are mounted on a subpanel, which can be exposed by removing the rear (or connector) panel of the chassis.

### 6.10.5 Excitation Power Supply

Figure 6.10.8 shows the front panel of the 1-kHz excitation power supply. Plugged into the left side of the panel is the frequency control oscillator. This control oscillator can be removed for servicing or can be replaced with control oscillators for other frequencies. The oscillator is internally connected to the main aplifier; however, the oscillator output is also brought out to terminals on the rear panel for convenience in troubleshooting and for possible use in driving or synchronizing other amplifiers. Terminals are also provided at the rear of the chassis for 115-V ac 60-Hz power input and the 1000-kHz power output.

### References

For further details on the conductivity-type single-point molten-salt level probe system, see the following reference documents and ORNL drawings.[2-12]

1. R. G. Affel, G. H. Burger, and R. E. Pidgeon, *Liquid Metal Level Transducers,* ORNL-2792, sect. 3, pp. 27–33.

2. ORNL job specification JS-81-198, Low-Level AC Alarm Transducer.

3. ORNL drawing E-HH-Z-41544, Salt Level System Junction Boxes, Assembly and Details.

4. ORNL drawing E-HH-Z-41545, Salt Level System, Interconnection Wiring.

5. ORNL drawing D-HH-Z-41637, Auxiliary Disconnects, Reactor and Drain Tank, Details.

6. ORNL drawing D-HH-Z-41793, Drain Tank Salt Level Indicator Probe, Assembly and Details.

7. ORNL drawing D-HH-Z-41794, Drain Tank Salt Level Indicator, Probe Details.

8. ORNL drawing D-HH-Z-55568, Drain Tank Salt Level Indicator, Probe Head Cover, Details.

9. ORNL drawing D-HH-Z-55592, Single-Point Level Indicator, Cable Routing and Positioning.

10. ORNL drawing D-HH-Z-57465, Drain Tank Level Indicator, Modifications, Assembly.

11. ORNL drawing D-HH-Z-57466, Drain Tank Level Indicator, Modifications, Details.

12. R. F. Hyland, *Tests of a Resistance-Type High-Temperature Sensor for the Continuous Measurement of Salt Level in Molten-Salt Fueled Reactors,* CF-61-3-25.

## 6.11 ULTRASONIC MOLTEN-SALT LEVEL PROBE

### 6.11.1 Introduction

An ultrasonic level probe is used in the fuel storage tank to provide a remote single-point indication of molten-salt level in this closed, weld-sealed vessel.

The purpose and operational usage of the ultrasonic probe are the same as those of the conductivity level probe used in the fuel and coolant drain tanks and described in Sect. 6.10. Although it was initially planned to do so, the conductivity probe was not used in the fuel storage tank because the expected corrosion rate in the tank during fuel processing operations was so high that the thin (0.030 in.) walls of the conductivity probe would probably be penetrated before completion of the fuel processing cycle. The feasibility of the ultrasonic level probe was under investigation when the corrosion problem was discovered and, since this type of probe is amenable to thick-wall construction, it was selected for the fuel storage tank application.

The ultrasonic probe system used in the MSRE was developed for the AEC by Aeroprojects, Inc., with the assistance of ORNL. ORNL participation in this project consisted in reviewing the Aeroprojects design and incorporating such revisions as were required to satisfy the metallurgical, containment, and environmental requirements of a reactor-grade installation; fabrication of those parts of the probe that required special materials and fabrication techniques; and providing assistance to Aeroprojects, Inc., in testing the system after installation.

### 6.11.2 System Description

As shown in Fig. 6.11.1, the system consists of a tank probe assembly, an excitation rod assembly, a transmitter, and a receiver.

The tank probe assembly consists of a vertical ½-in.-diam rod, a level sensing bar, and a proprietary support called a force insensitive mount. The level sensing bar is welded to the bottom of the rod and has a rectangular cross section selected to be resonant at the oscillator frequency. The vertical rod is suspended from and welded to the force insensitive mount at the point where the rod enters the tank.

The excitation rod assembly is external to the tank and consists of a solid ½-in.-diam stainless steel rod and a force insensitive mount. The rod connects the tank probe assembly to the transmitter and receiver, and the force insensitive mount supports the rod where it passes the concrete wall of the fuel processing cell.

The transmitter is a magnetostrictive transducer located at the outer end of the excitation rod and is excited by an electronic power oscillator. The length of the excitation rod and the dimensions of the force insensitive mounts and the tank probe assembly are chosen so that the system is resonant at the 25-kHz oscillator frequency. A third force insensitive mount (not shown in Fig. 6.11.1) supports the transmitter.

The receiver consists of two piezoelectric crystals and a differential amplifier. The crystals are bonded to the excitation rod near the transmitter. Output voltages generated by the crystals are amplified by a differential amplifier. The resultant difference signal is used to operate a relay that controls high- and low-level indicator lamps on the main control panel.

The force insensitive mount, a proprietary item of Aeroprojects, Inc., is the element in this system that differentiates it from other ultrasonic level indicators now commercially available and that makes possible ultrasonic detection of level in high-temperature molten-salt reactor systems. The design of this mount permits ultrasonic energy to be transmitted through containment walls, along the excitation rod, and into closed vessels without excessive loss and thus allows the excitation and detection transducers to be mounted outside the biological shield in a hospitable environment away from corrosion, high temperature, and nuclear radiation. The mount can be fabricated of the alloys used in reactor work and welded into the containment vessel wall. The resulting penetration is a rigid all-welded assembly that neither reduces the vessel integrity nor restricts the flow of ultrasonic energy.

### 6.11.3 Theory of Operation

In principle, the ultrasonic probe is an acoustical impedance device. Level is determined by detecting the different states of acoustical energy transmission which exist when molten salt is in contact with the sensing bar at the lower end of the excitation rod and when the level is below the sensing bar. The amount of energy transmission is a function of the degree of mismatch between the probe sensing plate and the surrounding medium. The acoustical impedance of the surrounding medium is an inverse function of density. When the level is below the sensing plate, the surrounding medium is a gas, the acoustical impedance match is poor, and the amount of energy tranmission is low. Conversely, when the level is at or just above the bottom of the sensing plate, the sorrounding medium is partially molten salt, the impedance match is improved, and the amount of energy transmission is increased.

To provide a means of detecting changes in energy transmission and thus provide a measure of acoustical impedance, the system is tuned to resonance at the oscillator frequency. The magnetostrictive transducer excites this tuned circuit by converting electrical energy from the power oscillator into longitudinal vibrations of the excitation rod. The energy contained in these vibrations is transmitted to the sensing plate by the excitation rod and is either radiated to the medium surrounding the sensing plate or is reflected back along the excitation rod. The reflected component produces a standing wave along the excitation rod, the amplitude of which is a function of the reflected energy. The ratio of the maximum amplitude of this standing wave to the minimum amplitude is called the standing wave ratio. This ratio is measured by locating the receiver crystals at points separated by quarter wavelengths such that one crystal is at a point of minimum vibration, called a node, and the other is at a point of maximum vibration (antinode). The outputs of these crystals are applied to the inputs of a differential amplifier which produces a signal proportional to the standing wave ratio. This signal is used to operate a relay which, in turn, operates the high- and low-level indicator lamps. When the molten-salt level is below the probe sensing plate, the standing wave ratio is high, the relay is energized, and the low lamp is lit. When molten salt contacts the sensing plate, part of the energy is transmitted to the salt, the standing wave ratio decreases abruptly, the relay is deenergized, and the high lamp is lit. A similar abrupt change takes place when the salt breaks contact with the sensing plate. Due to surface tension effects,

there is a slight ($^1/_8$ in.) difference in the levels at which contact is made and broken.

The function of the force insensitive mounts is to provide a means of supporting the excitation rod and of passing through the tank walls without loss or reflection of ultrasonic energy. This is accomplished in a manner analogous to the quarter-wave stub used on radio-frequency electrical transmission lines and antennas. Briefly, the dimensions and geometry of the mount are such that the mount is resonant at the oscillator frequency and presents a high impedance to the flow of ultrasonic energy through the mount.

The above discussion assumes that there is no energy loss or reflection in the probe system except at the sensing plate. In actual practice, reflections and losses do occur at other points. The additional losses present no problem when kept to a minimum by proper design, installation, and adjustment, however, the additional reflections result in multiple resonances, which can be troublesome if their existence is not recognized. Also, since the resonant frequency of the system is a function of the dimensions of the probe and the length of the excitation rod, the performance of the probe system is affected by ambient and storage tank temperature. These effects are discussed further in the discussion of performance which follows (see 6.11.5).

### 6.11.4 Construction

Figure 6.11.2 shows the probe assembly that is inserted into the fuel storage tank. The force insensitive mount, near the left end, is welded to the tank with the curved section outside. Figure 6.11.3 is a close-up of this curved section and the force insensitive mount. The threaded hole in the flat end of the rod, in the lower right-hand corner of the photograph, is for connecting this excitation rod to the next section during preinstallation testing. When installed in the MSRE, all of these excitation rod sections were welded together.

The electronic chassis for this system are mounted in a Bud-type cabinet on the east side of the switch house at the MSRE. The transducer is also mounted in this cabinet, with the excitation rod extending in a long curve through stacked concrete radiation shielding blocks to the wall of the fuel processing cell. The excitation rod is supported in this wall by a force insensitive mount, which also seals the opening through which the excitation rod passes. Inside the cell, the excitation rod is supported by the force insensitive mount through which the excitation rod enters the fuel storage tank. From the transducer to the tank, all component parts are made of stainless steel. The force insensitive mount on the tank and all parts inside the tank are made of INOR-8.

### 6.11.5 Performance

Performance of the probe was satisfactory during initial operation of the fuel processing system; however, some difficulties were experienced during subsequent operations. The probe operated very well when the tank was filled but did not operate when the tank was drained. A check of the instrument made at this time revealed that the oscillator frequency had drifted 40 cps from the original setting. Correction of the frequency restored the instrument to an operative condition. Further checks revealed that the frequency varied as much as 300 Hz over a period of a few days. Since the probe is basically a sharply tuned (high-$Q$) resonant system, small shifts in oscillator frequency from the resonant point caused the probe to become inoperative.

The problem of frequency drift was further complicated by the presence of a number of resonant peaks within the range of oscillator frequency adjustment (some of which were not responsive to level changes) and by the difficulty of checking instrument performance in the field without interfering with operations (salt level must be varied to check probe performance).

The difficulties experienced with the MSRE probe showed that some improvements were needed if the device was to be useful for long-term operation under field conditions. To gain a better understanding of the problems involved, studies were made of the frequency response and performance characteristics of the probe system. Because of the need to minimize interference with MSRE operations, these studies were made using the prototype probe system installed in the MSRP level test facility. Results of frequency response tests performed in the prototype probe[1] are shown in Fig. 6.11.4. The response characteristics of the MSRE probe system have not been measured but are known to be similar. From Fig. 6.11.4, it can be seen that a number of resonance peaks existed on the prototype probe system. While several of the peaks were level sensitive, the only peak that disappeared completely when molten salt touched the plate was the one at 51,230 Hz. Note that this is not the peak with the highest amplitude. Other peaks exhibited considerable change in amplitude as the level rose and covered more of the excitation rod, but the point where this occurred was less well defined, and in some cases the change was not sufficient to actuate the relay. Some peaks were not appreciably affected by level, thus indicating that the reflection points were outside the vessel. Figure 6.11.4

also shows that the resonant peaks are very narrow and that a 100-cycle drift in oscillator frequency is sufficient to render the system inoperative.

The response characteristics shown in Fig. 6.11.4 were obtained under conditions of constant ambient and vessel temperature. Other tests of the prototype system[2] showed that the resonant frequencies decreased at a rate of approximately 0.12 Hz/deg F as the sensing plate temperature was increased from 1000 to 1500°F and decreased at a rate of 6.25 Hz/deg F as the ambient temperature increased from 68 to 84°F. In both cases the shift was essentially linear with temperature. These results indicated that the effects of ambient and vessel temperature would not present a serious problem if the oscillator frequency was stable and if the operating temperatures were reasonably constant but that the system must be adjusted at operating temperature and readjusted if significant temperature changes occur. These tests have not been repeated at the MSRE; however, the vessel temperature effects should be close to those observed on the prototype and, since the excitation rod is longer, the ambient temperature effects should be slightly greater.

Since performance of the prototype tests, modifications have been made in the electronic chassis to stabilize the oscillator and otherwise improve system performance.[3] Since no salt has been transferred to the system since these modifications were made, their effectiveness has not been tested.

Further improvements in the performance of the ultrasonic probe system can probably be made by installing energy-absorbing slugs in the excitation rod and notch filters in the amplifier. The energy absorbers would broaden the bandwidth of the resonant peaks, and the filter would discriminate against the unwanted peaks. A possibility also exists that an oscillator could be designed which would automatically adjust to the natural frequency of the system. The feasibility of making these improvements should be investigated before final selection of the ultrasonic probe for use in future reactor systems.

### References

For further information on the ultrasonic molten-salt level probe, see the following reference documents and ORNL drawings.[4–7]

1. *MSR Program Semiannu. Progr. Rep. Aug. 31, 1965*, ORNL-3872, pp. 66–70.

2. *MSR Program Semiannu. Progr. Rep. Feb. 28, 1965*, ORNL-3812, pp. 38–40.

3. *MSR Program Semiannu. Progr. Rep. Aug. 31, 1966*, ORNL-4037, pp. 85–86.

4. ORNL drawing D-HH-B-55547, Ultrasonic Panel, Equipment Layout.

5. ORNL drawing D-HH-Z-57468, MSRE Fuel Processing Tank, Ultrasonic Level Indicator, Generator and Detector Schematic.

6. ORNL drawing D-HH-Z-57471, Ultrasonic Level Detector, Assembly and Details.

7. ORNL drawing D-HH-Z-57472, Ultrasonic Level Detector, Plan View and Sections.

## 6.12 NaK-FILLED DIFFERENTIAL PRESSURE TRANSMITTER

### 6.12.1 Introduction

A nozzle-type venturi tube (discussed in Sects. 3.3 and 6.13) measures the flow rate of molten salt in the main circulating loop of the MSRE coolant-salt system and produces a differential pressure signal that is proportional to the square of the flow rate. Since the venturi must operate at system temperatures (900 to 1300°F) and since the coolant salt freezes below 850°F, either the device used to measure the differential pressure must be operated at system temperature, or the system pressures must be transmitted to a device operated at a lower temperature. In the latter case, the pressure transmitting medium must not be significantly affected by the temperature transition between the system and the device. In addition to withstanding the effects of temperature, the device must also satisfy the coolant-salt system containment requirement and have an accuracy within that required for the heat power computation (flow $\times$ $\Delta T$). Also, since the coolant-salt flow signal initiates safety actions, the device must be reliable.

During the conceptual stages of MSRE design, no differential pressure device was available that could be operated entirely at system temperature and satisfy the above requirements, and the feasibility of developing such a device did not appear to be promising.*

Several methods of indirect measurement of the differential pressure at the coolant-salt venturi taps were considered. Of these the one that most nearly satisfied the MSRE requirements was the NaK-filled differential pressure transmitter described below. The

*Although some progress has since been made in the development of pressure and differential pressure transmitters for high-temperature service, the NaK-filled transmitter is still the only device that is suitable for MSRE service.

design of this transmitter was based on that of Taylor Instrument Company's model 225T transmitter, which, in turn, was based on a prototype differential transmitter developed by Taylor for the ANP project at ORNL.[1] ORNL participation in this project was limited to the design and fabrication of the high-temperature seal assemblies and consisted in establishing criteria and assisting with the conceptual design; reviewing Taylor's design and incorporating such revisions as were required to satisfy the metallurgical, containment, and environmental conditions of a reactor-grade installation; providing certified INOR-8 materials for fabrication of seal parts; and performing welds and weld inspection where special techniques were required.

### 6.12.2 System Description

Figure 6.12.1 shows the construction of the MSRE NaK-filled differential pressure transmitter assembly. The assembly consists of two seal assemblies and a differential pressure transmitter. Each seal assembly consists of a high-temperature seal, a low-temperature seal, and an interconnecting capillary tube. Each seal element contains a flexible, convoluted diaphragm which is welded at the periphery to the body of the seal element. The capillaries are also welded at the point of attachment to the seals, and the enclosed volume within the capillary and seals is filled with NaK. The low-temperature seal assemblies are attached to the high- and low-pressure ports of the differential pressure transmitter, and the internal volumes of the transmitter and low-temperature seals are filled with silicone oil. The silicone oil is separated from the NaK by the diaphragm in the low-temperature seal assembly, and the diaphragm in the high-temperature seal further contains the NaK and separates it from the process fluid.

### 6.12.3 Theory of Operation

Since all of the internal volume within the seal elements, capillary, and transmitter are filled with incompressable fluids (NaK and silicone oil) and since the diaphragms are flexible, process pressures applied to the diaphragms in the high-temperature seals are transmitted hydraulically to the differential pressure sensing diaphragm in the transmitter with little loss. Such loss as does exist is due to deflection of the diaphragms. The resultant differential pressure across the transmitter diaphragms produces a proportional force which is applied to a force beam. The force beam acts as a lever which is sealed and pivoted at the point of exit from the transmitter body. A calibrated spring at the end of the beam produces a restraining force such that the amount of motion is proportional to the force applied. This motion is coupled to a flexure-pivoted cantilever beam and transduced to a force on a second flexure-pivoted cantilever beam. A strain gage transducer restrains the motion of this beam and produces an electrical signal output proportional to the force. A dash pot at the end of the force beam damps motion and inhibits oscillation. Zero correction is accomplished by adjusting the tension on a third spring, which applies a constant force to the intermediate cantilever beam. The range of the instrument is determined by the position of the range adjuster on the force beam. The position of this adjustment determines the lever ratios of both the force beam and the intermediate cantilever beam and thus determines the amount of motion of the intermediate beam produced by a given differential pressure.

The NaK fill fluid is a eutectic mixture of 78% potassium and 22% sodium, which freezes at 12°F and has a vapor pressure less than atmospheric below 1440°F. It has a low temperature coefficient of volumetric expansion, does not corrode stainless steel or INOR-8, and is chemically stable under conditions of high temperature and high-level nuclear radiation. These and other properties[2,3] make NaK a suitable medium for transmission of pressures from high- to low-temperature zones. The high-temperature seal elements of the MSRE transmitter can be operated at temperatures up to 1800°F while the main body assembly is operated under normal ambient conditions if system pressures and temperatures are maintained within the limits shown in Figs. 6.12.2 and 6.12.3. Operation under conditions where the vapor pressure exceeds the system pressure will damage and possibly rupture the diaphragm in the high-temperature seal element. This will occur if the temperature is too high or system pressure too low. For this reason, a high vacuum should not be pulled on the system if the seal temperature is above 850°F.

Expansion and contraction of the NaK with changes in ambient and system temperature and displacement of the NaK resulting from changes in applied differential pressure cause deflections of the seal diaphragms. These deflections result in the presence of small differential pressures across the diaphragm, which effectively subtract from the applied pressures and produce errors in the transmitted signal. For this reason, the diaphragms are required to be thin and to be constructed so as to deflect with very little applied force.

### 6.12.4 Construction

Figure 6.12.4 shows the NaK-filled transmitter assembly before installation in the MSRE. The silicone-filled transmitter body and the low-temperature seals are visible at the center of the photo, and one high-temperature seal is visible at the right. The capillaries connecting the low- and high-temperature seals are 25 ft long. These capillaries are protected by a flexible spiral-wrap armor tube and are not visible in the photo.

Figure 6.12.5 shows the diaphragm in the high-temperature seal. The diaphragm consists of three nested 5-mil (0.005 in.) diaphragms, which are convoluted to provide flexibility. The use of multiple diaphragms was necessary because of MSRE requirements that the diaphragm thickness be at least 0.015 in. and because excessive stresses would be present in the diaphragm under conditions of the maximum expected deflection if a single diaphragm of this thickness were used. To eliminate the entrapment of air between the diaphragms, the diaphragm assembly was welded to the body of the seal head in a vacuum using electron beam technique. Elimination of entrapped air was necessary to prevent deflection of the diaphragms when the heated air expanded and the consequent possibilities of temperature-induced errors in the transmitted signal and/or diaphragm failure. To prevent damage to the diaphragms resulting from the application of excessive differential pressure to the process connections, the seal body plate behind the diaphragm was contoured to match the diaphragm convolution, and the distance between the diaphragm and the plate was held to a minimum. This contoured backup plate also serves to minimize the volume of NaK in the high-temperature seal. Minimizing the NaK inventory in the seal (and in other parts of the transmitter) is desirable since release of NaK into molten salt will result in the precipitation of constituents of the salt proportional to the amount of NaK released. Uncertainty as to the consequences of precipitation was the main reason that NaK-filled transmitters were not used more extensively in the MSRE. In particular, NaK-filled transmitters were not used on the fuel-salt system because of possible precipitation of uranium. All materials in the high-temperature seal elements, including the diaphragms, are INOR-8. The capillary and low-temperature seal materials are stainless steel. Materials in the differential pressure transmitter are the manufacturer's standards.

To prevent escape of NaK and to prevent inleakage of air, the NaK-filled assemblies are completely seal welded. All welds were done by the inert gas tungsten arc process (Heliarc), and full penetration was required on all welds in contact with the molten salt.

To minimize the effects of expansion and contraction of NaK and silicone oil with changes in temperature, the transmitter and seal assemblies are designed so that the volumes of the high- and low-pressure sides are equal. Since the extraneous forces produced by volumetric changes in the high- and low-pressure sides are in opposition, the net effect is zero when volumes are equal and temperature changes are identical.

### 6.12.5 Performance Characteristics

The performance characteristics required for the MSRE transmitter are given in the specification,[4] and exceptions allowed are listed on the purchase order.[5] Briefly, these characteristics are as follows:

Working temperature (seal diaphgrams), 850 to 1300°F

Working pressure
- 850 to 1300°F, −5 to 60 psig
- Below 850°F, −25 in. Hg to 60 psig

Ambient temperature (at transmitter), 40 to 150°F

Range, continuously adjustable from 0–100 to 0–600 in. $H_2O$

Output, 0 to 24 mV dc (nominal)

Hysteresis, less than 1.5% full scale

Response time, less than 2 sec (0 to 90%)

Overrange differential pressure (without damage), −300 psi

Calibration shift
- Less than 1 in. $H_2O$ zero shift for working pressure change from 25 in. Hg vacuum to 60 psig
- Less than 0.5 in. $H_2O$ zero shift and 0.3 in. $H_2O$ span change per 100°F temperature change on both seal elements simultaneously
- Less than 2 in. $H_2O$ zero shift for 50°F difference in seal element temperatures
- Less than 2% of full scale zero shift and 2% of full scale span change for 40 to 150°F change in differential pressure transmitter temperature
- Less than 2% of full scale zero shift for 250% of full scale reversal of full scale reversal of overrange differential pressure

Prior to shipment from the factory, three transmitters were tested with the following results: maximum hysteresis, 0.55% of full scale; maximum deviation from linearity, 0.37% of scale; zero shift after 45 lb reverse pressure applied to the seals, 0.9%; and calibration change for 250°F change in temperature (1000–1250°F), 0.64%. The transmitter range was set at 600 in. $H_2O$ during these tests.

One of the two transmitters initially installed at the MSRE shifted calibration erratically shortly after the

start of nonnuclear operations. The cause of these shifts was not definitely determined, but subsequent tests indicated that they were due to leakage of air into the silicone-oil-filled section of the transmitter. The defective transmitter was replaced with a third (spare) unit. Performance of both of the installed transmitters has since been satisfactory.[6]

### References


1. W. R. Miller, *High-Temperature Pressure Transmitter Evaluation,* ORNL-2483 (1958).
2. S. A. Hluchan, "Pressure and Temperature Transducers for High-Temperature and Nuclear Radiation Environments," paper presented at the National Telemetering Conference, June 2, 1964, Los Angeles, Calif.
3. C. B. Jackson (ed.), AEC-USN, *Liquid Metals Handbook (sodium NaK supplement),* TID-5277, United States Navy (1955).
4. ORNL specification JS-81-169, Specification for an All-Welded, High-Temperature, NaK-Filled, Differential Pressure Transmitter for Use with the Molten-Salt Reactor Experiment.
5. Union Carbide Corporation, Nuclear Division, purchase order 59Y-37547.
6. ORNL drawing D-HH-B-55557, Coolant-Salt Flow Transmitter Installation.


## 6.13 COOLANT-SALT FLOW ELEMENT

### 6.13.1 Introduction

The coolant-salt flow element, FE-201A, is a nozzle-type venturi tube for measuring the flow rate of molten salt through the MSRE coolant-salt system. It is located in a horizontal section of 5-in.-diam pipe immediately upstream of the coolant radiator (see Sect. 3.3). Designed and machined by B-I-F Industries, Inc., in accordance with Company specification No. JS-81-165[1], the venturi produces a differential pressure that varies as the square of the flow rate. The differential pressure is detected and transmitted to a remote recording instrument by the NaK-filled differential pressure transmitter described in Sect. 6.12 of this report. The venturi meter was selected for this application because it is accurate, the permanent head loss is negligible, and all-welded construction is easily attained. The method of fabrication is the unique feature of this element. It is machined from a solid rod of INOR-8.

### 6.13.2 Principles of Operation

The venturi tube is one form of head-type element for metering the flow of fluid in a closed pipe. It forms a section of the pipeline, and the flow of fluid through a suitable restriction in the tube establishes a pressure drop which can be measured and related to the flow rate. The venturi, as shown in Fig. 6.13.1, has a short straight throat section preceded by a short convergent inlet section and followed by a longer divergent outlet section. Transitions are by easy curves. The throat section forms a restriction in the line which causes a local and temporary increase in fluid velocity and a corresponding decrease in pressure. The relationship of this change in pressure to the velocity of the flowing fluid is the basis for measuring flow rates with head-type meters.

The basic equation for calculating the weight rate of discharge of liquid from a venturi tube in a closed pipe[2] can be written as follows:

$$W_h = \frac{359.1 C_d d^2}{\sqrt{1-\beta^4}} \sqrt{h_w \gamma_f}, \tag{1}$$

or for the volume flow rate

$$Q_m = \frac{44.75 C_d d^2}{\sqrt{1-\beta^4}} \sqrt{h_w / \gamma_f}, \tag{2}$$

where

$W_h$ = rate of flow, lb/hr,

$Q_m$ = rate of flow, gal/min, 359.1 and 44.75 = mathematical constants,

$C_d$ = coefficient of discharge,

$d$ = venturi throat diameter, in.,

$D$ = pipe diameter, in.,

$\gamma_f$ = specific weight of flowing fluid, lb/ft$^3$,

$h_w$ = differential pressure across venturi, in. $H_2O$ at 68°F,

$\beta = d/D$ = ratio of diam to pipe diam.

The value of each of these variables except $C_d$ is determined by the dimensions of the venturi and the physical characteristics of the fluid. The coefficient of discharge, $C_d$, accounts for the deviation of the actual flow from that given by the theoretical equation for frictionless flow. The numerical value of this coefficient must be determined experimentally by flow calibrating

the specific meter run under conditions as nearly as possible identical to those under which it will be used. The coefficient of discharge is relatively constant for large changes in flow rate so long as the fluid remains in a turbulent state. The turbulence or dynamic state of the flowing fluid can be determined by computing the Reynolds number:

$$R_D = \frac{6.32 W_h}{D\mu}, \tag{3}$$

where $\mu$ is the absolute viscosity of fluid at flowing temperature in centipoises. The Reynolds number is the ratio of the inertial forces to the viscous forces existing in a system. This ratio establishes the conditions under which results obtained from one flow system may be used in another, providing the systems are similar. At Reynolds numbers above 10,000, the fluid is definitely in the turbulent state. The curve in Fig. 6.13.2 shows values for $C_d$ plotted as a function of Reynolds number.

### 6.13.3 Construction

The venturi tube is a solid rod of INOR-8 that has been accurately machined to the dimensions shown in Fig. 6.13.3. The design is a B-I-F Industries, Inc., model NZIW venturi nozzle which is shorter than the Herschel[2] standard venturi design but has the advantages of being less difficult to machine and of fitting more easily into pipelines. The major differences are the shorter and more rounded inlet and exit sections of the venturi nozzle.

The ends of the tube are beveled for butt-welding in a 5-in.-diam, sched 40 pipeline. There are two $^5/_{16}$-in.-diam pressure taps located at the throat and two at the inlet. The taps are made as large as possible and are located on the bottom half of the horizontally mounted tube to ensure complete filling of the pressure sensing lines and to avoid the possibility of their becoming plugged by sediment which might collect on the bottom of the venturi. The pressure sensing lines are very short runs of $^1/_2$-in. sched 40 pipe. The principal dimenstions and weld-joint construction of the venturi assembly are shown on drawing E-GG-B-41510.[3]

### 6.13.4 Performance Characteristics

The performance characteristics of the coolant-salt flow element, FE-201A, are described by the curves in Figs. 6.13.2 and 6.13.4. The venturi flow tube assembly was calibrated at the B-I-F Industries hydraulic laboratory using water at ambient temperature. The data obtained were then used to determine the coefficient of discharge, $C_d$, which is plotted in Fig. 6.13.2. The calibration setup, which included sections of the upstream and downstream piping, is shown on B-I-F Industries, Inc., drawing C-153683.[4] The differential pressures produced when molten salt flows through the venturi tube were calculated by substituting the experimentally determined value of $C_d$ in the flow equations. The results for a salt temperature of 1100°F are shown in Fig. 6.13.4. Curves for other salt temperatures may be calculated by using the correct value for fluid density in the flow equations. The density and viscosity of the molten salt at any temperature between the limits of 950 and 1250°F may be determined as follows:

$$\gamma_t = 135.27 - (1.386 \times 10^{-2})t, \tag{4}$$

$$\log_{10} \mu = \frac{1760}{T} - 1.188, \tag{5}$$

where

$\gamma_t$ = density, lb/ft$^3$, at temperature $t$,

$t$ = molten-salt temperature, °F,

$\mu$ = viscosity, centipoises,

$T$ = temp of molten salt, °K.

The venturi will produce a differential pressure that corresponds to the actual flow rate within $\pm^1/_4$%, but the accuracy of the calibration curve calculated for the flow of molten salt depends upon the accuracy of the molten-salt physical data: density and viscosity. Overall accuracy, that is, the accuracy of the measuring system, consisting of the venturi tube, differential transmitter, and recording device, is within ±2% of actual rate of flow.

The permanent pressure loss is less than 12% of the differential pressure.

### References

1. Oak Ridge National Laboratory specifications JS-81-165 and JS-81-165A, Venturi Flow Tube Assembly for the Molten Salt Reactor Experiment.

2. *Fluid Meters – Their Theory and Application*, Fifth Ed., 1959, ASME.

3. Oak Ridge National Laboratory drawing E-GG-B-41510, Coolant Piping System, Venturi Flow Tube, Assembly and Details.

4. B-I-F Industries, Inc., drawings B-153680, Venturi Flow Tube Model NZIW; C153683, Venturi Flow Tube Calibration Assembly.

## 6.14 THERMOCOUPLE SCANNER

### 6.14.1 Introduction

A thermocouple scanning system is used to monitor and display the signals produced by approximately 400 thermocouples* attached to pipes and vessels in the MSRE heated salt systems. These thermocouples are attached to the reactor fuel and coolant system pipes, the fuel and coolant system pumps, the drain tanks, the reactor vessel, and the radiator. The information obtained from this system is used, during reactor systems startup and shutdown, to inform the operator of the existence of temperature differences between monitored thermocouple points which could result in excessive thermal stresses in associated pipes and components. During normal operation, the system is used to detect abnormalities in temperature profiles. In particular, the radiator thermocouples are monitored to detect a drop in temperature of any of the 120 radiator tubes below the level where freezing of salt in the tubes could occur.

The operator observes on a 17-in. oscilloscope the different signals produced by bucking a reference signal against each of the scanned thermocouple signals. The reference signal is produced by a thermocouple attached to a pipe or component having a slow thermal response or by a precision variable-voltage calibrated power supply in the case of the two radiator scanners. If no temperature difference exists between the reference signal and the output of the switch, essentially a straight line is seen on the oscilloscope. If, however, a temperature difference exists between all or any one of the scanned thermocouples and the reference signal, the oscilloscope display is deflected by an amount proportional to this difference at a point corresponding to the position of the thermocouple in the scanning sequence. The resultant display is a temperature difference profile.

An alarm detector unit is used to produce an alarm signal when this temperature difference exceeds an adjustable value, ±50 to ±300°F. When the alarm sounds, the operator observes the scope and adjusts the appropriate heater to reduce the thermal gradient or takes other corrective action. The absolute temperature of the displayed signals is determined by the precise measurement, using a recorder or indicator, of the signal produced by a second thermocouple located adjacent to the reference thermocouple. A block diagram of a 100-point system is shown in Figs. 6.14.1 and 6.14.2.

### 6.14.2 System Description

An Advanced Technology Laboratories' model 210 100-point mercury jet switch,† called a Deltaswitch, is used to commutate the thermocouple input signals. As shown in Fig. 6.14.3, the mercury jet switch consists of a centrifugal pump which scoops mercury from a well in the switch housing and jets it in a thin stream across pins (switch contacts) located in a circle around the switch. The mercury pool serves as the common output of the switch. For thermocouples, two switch decks are required, one for each thermocouple lead. The switch is driven by a 1200-rpm synchronous motor, producing a thermocouple scanning rate of 2000 points per second. One hundred thermocouples, from a portion of the reactor system such as the coolant system, are attached to the switch. The commutated output signals from the switch are fed to a signal bucking network. Here, the integrated output of the switch is bucked against the reference signal. To eliminate ground loops caused by comparing signals directly from two grounded thermocouples, a capacitor switching system is used. Two double-pole, double-throw choppers operating synchronously are used to sample simultaneously each lead of the reference signal. This is accomplished by storing the charge from each line in a capacitor and then switching the chopper to place this charge across an integrating capacitor in the output leads from the commutator. Independent switching of each signal lead eliminates the switching spikes which would occur if the output of the reference couple were transferred into one commutator output lead by one capacitor.

The difference signal thus produced is fed to a Dynamics Instrument Company model 6256 differential dc amplifier. The output of the amplifier is fed to an alarm discriminator for detecting signals which exceed a preset value. The alarm set point can be adjusted from ±50 to ±300°F by varying the amplifier gain and adjusting a potentiometer in the discriminator.

The output from the amplifier is fed also to two 17-in. oscilloscopes, ITT model KS-707, for display. A grid overlay and calibrated marker signal are used so that each pulse can be identified with a given thermocouple. A calibrated marker signal produces a bright dot at the position of the desired signal. The marker generator is composed of standard components manufactured by Tektronix, Inc. A waveform generator type

*See Section 6.7.

†Formerly manufactured by Advanced Technology Laboratories, Mountain View, Calif. Manufacture now discontinued.

162 is used to generate a ramp voltage. The start of the ramp voltage is triggered by a sync pulse and is repeated once during each revolution of the switch. A Tektronix type 161 pulse generator is connected to the waveform generator. A ten-turn potentiometer, calibrated in terms of the 100 signal points, was added to the pulse generator. Adjusting this potentiometer provides a means of setting a window or voltage trigger level corresponding to the signal identification point desired (from No. 1 to 100). The ramp signal then triggers the pulse generator, which produces a voltage pulse at the correct oscilloscope sweep time. This pulse is fed to the *Z* axis of the oscilloscope, producing a bright dot on the display. The position of the dot corresponds to the signal number dialed by the potentiometer, thus providing a means of signal point identification. To power the two generators, a Tektronix type 160 power supply is used. All these components are mounted in a separate cabinet along with one 17-in. oscilloscope. This cabinet is located close to the reactor heater control panels and the other scanner panels.

The sync pulse for the scope is generated by a variable-reluctance magnetic pickup mounted close to the drive shaft of the switch, upon which a ferromagnetic pin is attached. A voltage pulse is generated in the pickup with each revolution of the switch as the pin on the shaft passes the pickup.

A block diagram of the alarm discriminator circuit is shown in Fig. 6.14.4 and the circuit schematic in Fig. 6.14.5. This circuit is designed to produce an alarm when pulse signals having an amplitude of ±1 V or greater and a repetition rate of 20 pulses per second are applied to the input. With proper adjustment of the differential dc amplifier, the discriminator may be adjusted to produce an alarm with signals as small as ±50°F. A pulse integrating circuit prevents spurious alarms from random noise pulses. Since the mercury jet switch samples each point 20 times per second, input pulses resulting from a true alarm condition will have a repetition rate of at least 20 pulses per second, and an alarm will occur. The discriminator alarm circuitry is completely transistorized and is packaged in a 3½-in.-wide, 7½-in.-high panel-mounted housing. Also packaged in the housing is the reference thermocouple isolation system, a sync-pulse amplifier for driving the oscilloscope trigger, and the necessary power supply circuits. See Fig. 6.14.7 for the panel layout.

The complete thermocouple scanning system for the reactor consists of five separate units as previously described, except for the oscilloscopes. One unit, scanner A, monitors the reactor cell thermocouple, scanner B the coolant system, and scanner C the fuel and coolant flush and drain tanks. The remaining two scanner (D and E) monitor the radiator tubes. (See ref. 3 for a list of thermocouples on each system.) Only two oscilloscopes are used, one in the control room and one in the reactor system heater control area. A switch is used to switch the signals from any scanner to either of the two scopes. The alarm detectors continue to function without oscilloscope display. The entire scanner system is mounted in standard panels located adjacent to the heater control panels at the 840-ft level‡ of the reactor building. The layouts of these panels are shown in Figs. 6.14.6 and 6.14.7. As seen in Figure 6.14.6, all the input signal switches and associated signal connectors are mounted on the panel. A nitrogen purge is used to prevent oxidation of the mercury. The rotameters on the panel are used for indicating and controlling the nitrogen purge to each deck of the switches. The pressure gage is used to indicate the nitrogen purge pressure. Scanner alarms due to an off-limit input signal or low nitrogen pressure actuate the annunciators at the top of the cabinet. In addition, an annunciator in the main control room, labeled scanner common alarm, is actuated if any of the annunciators on the scanner panel is in alarm condition. To clear this common annunciator, the local annunciator must be cleared first.

The layout of the input signal amplifiers and the alarm discriminators can be seen in Fig. 6.14.7. The scanner selector oscilloscope display switch and the reference voltage power supply are also located on this panel. The two recorders are for recording various process temperatures, including the temperatures of the thermocouple adjacent to the scanner reference thermocouples.

The oscilloscope and the master signal system are mounted in a semiportable cabinet located near the other scanner panels. To provide records of the various system temperatures as displayed on the oscilloscope, a Polaroid camera is mounted on the oscilloscope, and periodically, or upon demand, photographs are taken of the desired display.

The second oscilloscope is mounted in a panel in the main control room panelboard together with a scanner selector switch. This scope is used by the operators for general surveillance of reactor system temperatures.

The thermocouple signals for all five scanners are transmitted by Chromel-Alumel thermocouple lead wire to terminal blocks located in scanner panel 1 (see Fig.

‡See drawings D-HH-B-41658 through 51666 for panel details.

6.14.8). The terminal blocks are special swing-link blocks which allow adjacent signals to be connected together by the swing link. This type of terminal block was chosen in order to provide an easy method of eliminating the display of an open thermocouple signal by connecting it to a good signal, thus eliminating recurring or continuous alarms.

As can be seen in Figs. 6.14.8 and 6.14.9, the thermocouple signals are routed from the terminal blocks to the switch by No. 22 insulated copper wire. Each switch has four 50-point connectors, two for each deck. However, the thermocouple signals are not routed directly from the terminal blocks to these connectors but through four 25-point connectors, then through four jumper cables which connect to the four input switch connectors. Three additional 25-point connectors are also provided for each of the switches associated with scanner channels A, B, and C. There are then seven connectors (excluding the four primary switch connectors) associated with all switches except those used for radiator monitoring. The extra connectors provide extra scanner operating flexibility by allowing a group of 25 inputs from anywhere on the reactor, or 25 points jumpered together, to be connected to any scanner. This is particularly useful when signals on one scanner are from parts of the reactor system which are shut down and at a low temperature, while the remainder of the system is at normal temperatures. By using these extra connectors, a maximum of three groups of 25 inputs each can be jumpered to one signal at the normal temperature, thus preventing a continuous alarm condition due to low temperatures on these points.

### References


1. Calibration Procedure for ATL Deltaswitch Thermocouple Scanner.
2. Operation and Maintenance Manual, ATL Deltaswitch, Advanced Technology Laboratories, 369 Wisman Road, Mountain View, Calif.
3. Operation and Maintenance Manual for Model 6256 Differential Amplifier, Dynamics Instrumentation Company, 583 Monterey Pass Road, Monterey Park, Calif.
4. Operating and Maintenance Manual for 17-in. Oscilloscope, Model KS-707, Industrial Products Division, International Telephone and Telegraph Corporation, 15191 Bledsoe Street, San Fernando, Calif.
5. MSRE Reactor Process Systems Thermocouple Tabulation, ORNL drawing A-AA-B-40511.
6. Scanner Panel 1 Layout, ORNL drawing D-HH-B-41658.
7. Scanner Panel 2 Layout, ORNL drawing D-HH-B-41661.
8. Scanner Panel 1 Wiring Diagram, ORNL drawing E-HH-B-41664.
9. Scanner Panel 2 Wiring Diagram, ORNL drawing E-HH-B-41665.
10. Scanner Panels 1 and 2 Wiring Details, ORNL drawing E-HH-B-41666.
11. MSRE Thermocouple Scanner System Block Diagram, ORNL drawing Q-2574-1.
12. Thermocouple Scanner Alarm Discriminator Circuit, ORNL drawing Q-2574-3.


## 6.15 SINGLE-POINT TEMPERATURE SWITCHES

### 6.15.1 Introduction

Single-point temperature switches are used to monitor the temperatures of freeze flanges, freeze valves, and other MSRE components and to initiate alarms or corrective control actions when the temperatures are above (or below) a preselected value. Signal inputs to the switches are millivolt-level dc voltages obtained from thermocouples.

The switches used for this application consist of a number of individual single-channel and dual-channel units constructed in a modular form for integration into a system. The system is composed of the individual switch units (called alarm modules and control modules), a common switch module enclosure, and a separately enclosed chassis which contains a common power supply and the master (or common) alarm circuitry. The integrated group of switches and the associated power supply and alarm circuits are called an operations monitor system.* Figure 6.15.1 shows one operations monitor system with the alarm switches mounted in their common enclosure.

The operations monitor system uses magnetic amplifiers and solid-state components only and is designed for fail-safe operation. The basic design of the alarm switch includes no tubes, and there are no moving parts other than the mercury relays used to interface the system with control and annunciator circuits. The relays are energized when signals are within preset limits and drop out when limits are exceeded. This action, along with the operation of alarm lights, provides a method of detecting and indicating operational failures or loss of supply power.

*The operation monitor system was manufactured by Electra Systems Corporation of Fullerton, Calif., but is no longer available as a standard item.

### 6.15.2 System Description

Two types of switches are used in the MSRE temperature monitoring system. One type is the model ET-4200 alarm module, shown in Fig. 6.15.3. The other type is the model ET-4300 control module, shown in Fig. 6.15.4. The two types are similar insofar as the method of detection of off-limit signals is concerned but differ in construction and in the method used to produce alarm and control action. The major difference in the two module types is that the control module operates in a manner similar to an on-off controller and will reset automatically, while the alarm module is maintained in a latching state until the off-limit condition is corrected and the module is manually reset. As long as the off-limit condition exists, the alarm module will revert to the alarm state after reset. Also, the alarm mode has two separate and independent switch channels mounted on a common modular card, while the control module contains only one switch channel. Both types use magnetic amplifiers for signal detection, and the input circuitry for all switch channels is essentially identical.

Each alarm and control module contains set-point control potentiometers to establish the desired alarm limit for the signal being monitored. The set-point control on each module is adjusted with the sensor connected to the system. The operating range is then simulated by an external calibrator and the desired limit set. Individual modules plug in to connectors at the rear of the module enclosure and may be adjusted or removed without affecting the operation of other modules within the system.

Each module also contains indicating lights for alarm warning. The lights glow dimly when the system is operating properly and the monitored voltage levels are within preset limits. If the voltage input from a monitored circuit varies outside the preset limits, the corresponding alarm indicating light glows at full brilliance, and external control or alarm warning devices are activated. Mercury-wetted relays are used to provide contact actions for annunciator and control circuits.

Both module types can be used for either high or low alarm action, that is, for relay dropout and alarm lamp indication on increasing or decreasing signals.

Power to operate the switch modules is provided by a common power supply which is located in the power supply chassis. Both types of modules require regulated low-voltage dc and 1-kHz square-wave power to operate the magnetic amplifiers. Dc voltage is also required for operation of transistor circuits in both modules.

The model ET-4104 power supply chassis, shown in Fig. 6.15.2, also contains master alarm circuits which monitor the state of the alarm modules and provides local and remote indication of the existence of an alarm condition in any of the alarm modules supplied by the power supply chassis.† (The control modules do not activate the master alarm.) Local indication is obtained from indicator lamps on the power supply chassis. The remote indication is provided by an annunciator in the main control room. An external relay was used in the MSRE to convert the dc voltage provided by the master alarm circuit to the contact action required by the annunciator. Local indication in the form of an audible signal is also available as an option but was not used on the MSRE.

The MSRE monitoring system requires a total of 34 alarm modules and 77 control modules. These in turn require ten power supplies and module enclosures. There are, then, ten completed operations monitor systems used. The systems are mounted in standard modular panels and require two panels for the entire system. The panels are located in the auxiliary control room and are designated panels 5 and 6. The thermocouple leads are brought into terminal strips mounted on the back of the module enclosure. The terminals for the alarm and control relays are also mounted on the back of the enclosure. The master alarm relay is mounted external to the power supply. Typical panel layouts and wiring diagrams are shown in Figs. 6.15.5 and 6.15.6.

### 6.15.3 Theory of Operation

**6.15.3.1 General.** Block diagrams of the alarm module, control module, and power supply chassis are shown in Figs. 6.15.7, 6.15.8, and 6.15.9.

The following discussion will be limited to a discussion of the functional operation of the switch modules. Detail of circuits and of the theory of operation can be found in the instruction manuals listed as items 4 and 5 in the reference tabulation.

**6.15.3.2 Alarm module.** The basic element in the control module is a balanced bistable magnetic amplifier. The magnetic amplifier is composed of two nickel-iron cores, several control, output, and auxiliary windings; and associated input and output circuitry (see Fig. 6.15.10).

---

†The model ET-4101 power supply chassis shown in Fig. 4.15.1 does not have the master alarm feature.

Operation of the magnetic amplifier is similar to that of a conventional amplifier having differential input and output and biased so that a small voltage exists at each output when the amplifier is balanced and the difference in inputs is zero. The use of positive feedback greatly increases the effective gain of the amplifier and gives it bistable characteristics.

The alarm lamp is connected to one output of the magnetic amplifier, and the relay is connected to the other. Due to the mode of operation, the relay will be energized when the lamp is deenergized and vice versa.

The differential input characteristic of the magnetic amplifiers is obtained by the use of two windings. One of these windings is called the input winding. The other is called the limit-set winding. Current through the input winding is proportional to the signal input voltage. Current through the limit-set winding is set manually by adjustment of a potentiometer. In series with the input signal is a buffer choke which isolates the input winding from the transducer and eliminates any possibility of the transducer loading the magnetic amplifier.

The input winding and the limit-set winding are wound to oppose each other in polarity. When the ampere-turns products of the two windings are equal a null condition exists. In normal operation, nonalarm state, the ampere-turns product of the limit-set winding slightly exceeds that of the input winding, and a just off-null condition exists. Under this condition a small differential voltage exists at the output, the relay is energized, and the alarm lamp glows dimly. If the thermocouple signal exceeds the alarm limit set point, the magnetic amplifier output passes through hull. A positive feedback circuit senses this and causes the amplifier to latch in the alarmed state by effectively increasing the input signal. In this condition, the carrier or output power winding operation is reversed, and full power is delivered to the alarm light and minimum power to the control relay. The relay drops out, and the alarm light burns brightly. This alarmed state will continue until the input signal drops below the alarm set point and the amplifier is manually reset by an alarm reset button located on the front of the power supply.

The basic theory of operation may be simplified by considering the operation of a single-core magnetic amplifier. Referring to the circuits shown in Fig. 6.15.11 and the curves of Fig. 6.15.12, the basic operation of one of the two cores in the magnetic amplifier is as follows:

Square-wave carrier excitation ($E_c$) is applied to the carrier winding. On the positive half cycle, diode *CR* is forward-biased, and $E_c$, except for the small voltage drop across $R_L$ caused by magnetizing current, appears across the carrier winding. The flux density increases within the core

$$N_c\, d\phi = \int E_c\, dt\,,$$

until saturation is reached – from point $Q$ to point 1 in Fig. 6.15.12.

When the core saturates, all of the carrier voltage ($E_c$) appears across $R_L$ except for small voltage drops across the carrier winding and diode *CR*.

When the carrier voltage changes polarity, diode *CR* is reverse-biased, and the energy stored in the magnetic amplifier develops a polarity across the carrier winding which attempts to maintain $I_c$. Since diode *CR* is reverse-biased, $I_c$ decreases to a value equal to the leakage current through the diode. As the induced voltage across the carrier winding decreases, a condition is reached where $I_cN_c = I_bN_b$, and point 2 on the *B-H* loop (Fig. 6.15.12) is reached.

The action continues, and $I_bN_b$ becomes greater than $I_cN_c$ until, at the end of the negative carrier voltage half cycle, the operating point of the core returns to $Q$ (Fig. 6.15.12) and the cycle repeats.

The operating point, or reset point, of the core is determined, therefore, by the algebraic sum of the ampere-turns of all windings on the core. If the bias current ($I_b$) is reduced, the magnetic amplifier would reset to point *A*, and a higher output voltage would appear across $R_L$. Conversely, if the bias current is increased, reset would be at point *B*, and a lower output voltage would appear across $R_L$.

In the operations monitor system, the magnetic amplifiers and associated circuitry of the alarm modules (Fig. 6.15.10) provide high amplification of the individual input signals. The amplification factor ($Z_t$) is the transfer impedance of the magnetic amplifier, and, for any input current $I_i$ to the input winding, an output voltage $E_o$ is produced across the output winding:

$$Z_t = \frac{E_o}{I_i}.$$

A positive feedback circuit causes the magnetic amplifier to latch in the alarm state whenever the input signal exceeds the set point.

Reset action is obtained by applying a pulse to a transistor connected across the reset winding. This effectively shorts the reset winding and reduces the amplifier gain to zero.

As stated previously, the magnetic amplifier in the alarm module has two cores. Each of these cores has separate output bias and balance windings. However, the input, limit-set, reset, and feedback windings are common to both cores and are wound so that current in these windings will aid the bias in one core and oppose the bias in the other core. In this manner, the differential output characteristics are obtained. The number of turns on each core is the same.

**6.15.3.3 Control module.** The operation of the magnetic amplifier in the control module, shown schematically in Fig. 6.15.13, is the same as that of the alarm modules except that positive feedback is not used. The output voltage from the balanced magnetic amplifier is applied to the input of a transformer-coupled differential amplifier which drives a polarity-sensitive gate circuit. The gate drives a one-shot multivibrator, which drives the indicator lights and any external control circuitry.

During an in-limit condition, the magnetic amplifier produces positive pulses at the input to the gate that are passed and inverted by the gate. This train of pulses triggers the one-shot and causes the green in-limit light to glow brightly and the amber light to glow dim and provides voltage for an external load or control device. When an out-of-limit condition is present, the output polarity of the magnetic amplifier reverses, producing negative pulses at the gate input which are inhibited by the gate and causing the one-shot to revert to its static state. The amber light glows brightly, the green light goes out, and any external indicating or control device is deenergized.

**6.15.3.4 Power supply.** The dc power supply consists of a full-wave bridge rectifier and two series regulator circuits. Design and operation of these circuits is conventional. Components are all-solid-state.

The carrier power signal is obtained by generating a 1-kHz square-wave signal with a transistor multivibrator. An intermediate buffer amplifier and transformer are used to prevent loading of the oscillator and to split the signal into two signals which are 180° out of phase. These signals are used to gate power transistors which supply the carrier signals to the magnetic amplifier.

**6.15.3.5 Master alarm.** The master alarm circuits consist of two transistorized "or" gate circuits which produce a dc output voltage if an alarm condition exists in any one of the alarm modules. One circuit is sensitive to low alarm conditions. The other is sensitive to high alarm conditions. Outputs of the two gates activate separate high and low alarm lamps and provide separate dc voltages for use in activating external alarm devices.

### 6.15.4 Performance Characteristics

The more important operating characteristics of the alarm and control modules are as follows:

1. input balanced and floating, signal range: 0 to 30 mV dc;
2. input resistance: 1500 Ω;
3. common mode rejection: 120 db at 60 cps with 100-Ω line unbalance;
4. common mode voltage to ground: 150 V;
5. response time to step input: 50 to 100 msec;
6. set-point repeatability at constant ambient temperature: ±0.4% of full scale;
7. set-point temperature stability: 60 to 104°F, ±0.06% full scale per degree F;
8. input power: 115 V, 60 cycles.

### References

For further details on the single-point temperature switches, see the following reference documents and ORNL drawings.

1. MSRE Specifications 103, Temperature Alarm Switch; 104, Temperature Alarm Switch Power Supply; 105, Temperature Alarm Switch Module Enclosure; 108, Temperature Alarm Switch.

2. MSRE Thermocouple Tabulation, drawing A-AA-B-40511.

3. R. L. Moore, *Molten Salt Reactor Experiment Process Instrument Switch Tabulation,* CF-65-6-5.

4. Operations Monitor System Instruction Manual No. ETI-4000, Rev. 1, 4/63, Electra Systems Corp., Electra Way, Fullerton, Calif.

5. Model ET-4300 Control Module, Supplement to Operations Monitor System Instruction Manual No. ETF-4000-A, Rev. 1, 4/63.

6. ORNL Reactor Division drawings E-HH-B-41789 and 41790, Auxiliary Control Board Panels 5 and 6, Layout.

7. ORNL drawings E-HH-B-41791 and 41792, Auxiliary Control Panel Board 5 and 6, Wiring Diagram.

## 6.16 PUMP SPEED MONITOR

### 6.16.1 Introduction

The rotational speed of the fuel and coolant pumps is measured and displayed by special speed monitoring equipment. In addition, the pump speed is recorded by the data logger in revolutions per minute. Alarm and

control signals (see Sects. 4.2.2 and 4.2.3 for details on the alarm and control circuits) are produced when the speed of either pump falls below a preset value.

There are two complete channels of instrumentation for each pump to provide operating reliability. They are identified as SE-FP-E1 and SE-FP-E2 for the fuel pump and SE-CP-G1 and SE-CP-G2 for the coolant pump (see Sect. 7.1 for details on the instrument identification and numbering system). Each channel of instrumentation consists of a speed detector and a special linear count-rate meter called a pump speed monitor.

### 6.16.2 Speed Detector

The detector unit is located close to a 7-in.-diam, 60-tooth gear attached to the pump impeller drive shaft. There are two detectors for each pump. The detector (obtained commercially from Electro Products Laboratories, Inc.) consists of a round bar permanent magnet with many turns of fine wire wound around it. The coil thus formed is enclosed in a stainless steel housing which is Heliarc welded on one end (Fig. 6.16.1). This end screws into a bracket mounted in the pump shaft housing. The other end has 10 ft of ¼-in. stainless-steel-sheathed, mineral-insulated two-conductor cable welded to it. This cable passes through the pump shaft housing and is welded to it. The coil and cable insulation are made of material which can withstand greater than 200°F temperature and a gamma flux of $10^5$ R/hr. The entire detector, including the cable, has a leak rate for helium of less than $10^{-8}$ cc/sec at 50 psi. The dimensions of the unit are shown in Fig. 6.16.1. Since the pickup unit (detector) and gear comprise an impulse generator, the spacing between the end of the pickup and gear teeth is important. The output signal amplitude produced is dependent upon this spacing and the rotational speed of the gear (Fig. 6.16.2). The signal produced is an approximate sine wave whose frequency is proportional to the pump speed. A single sine wave is produced for each tooth in the gear. Therefore, there are 60 sine waves per revolution of the gear. The gear teeth are especially cut. All teeth are the same except three. These are made with the width between it and the adjacent tooth much wider than normal. Two of these are placed 60° apart and the other approximately 175° clockwise from the second tooth.[1] By observing the output signal of the pickup on an oscilloscope, the rotational direction of the pump can be determined as shown in Fig. 6.16.2.

### 6.16.3 Pump Speed Monitor

The special rate meter used to measure and indicate the signal from the pickup is called a pump speed monitor. The units used were obtained from equipment already on hand; therefore, two types are used. The two types are basically the same in operating principle but different in detail design and appearance.

The monitors contain circuitry to amplify the speed signal. The amplified signal is used to drive a Schmitt trigger, and the resultant pulse is shaped and used to drive a scale-of-2 pulser. The output of the pulser is fed to a count rate circuit whose output is a dc voltage proportional to the frequency of the speed signal. The dc signal varies from 0 to 100 V for full-scale output. The rate-meter output signal can be displayed by an external recorder (0 to 10 mV), a voltmeter on the monitor panel, and a remote meter calibrated for 0 to 2000 rpm full scale.

The speeds of the fuel and coolant pumps of the MSRE are displayed by the meters on the front panel of each pump speed monitor and by a remote meter from one monitor on each pump. The remote meters are located on the main control panel. In addition, the signals from all monitors are checked for alarms and recorded by the data logger and output on the 8-hr log.

The Q-1724-27 model VII monitor used on the fuel pump is shown in Fig. 6.16.3. This monitor contains a precision bridge with a null voltmeter which can be used to determine speed variations precisely from a preset reference. The accuracy with the null meter is ±¼%, and with the large meter, ±1%. This unit also contains three separate alarm set points, associated alarm lights, and double-pole, double-throw relays. Each alarm is independent and may be set over the full range of the instrument, 0 to 2000 rpm.

The Q-1724-28 model VIII monitor, used in the coolant pump, is shown in Fig. 6.16.4. This monitor is essentially the same as the Q-1724-27 model VII but differs in that it has only two alarms, does not have the null or deviation meter, and uses miniature tubes. Both models have a 1-in. oscilloscope mounted on the left of the front panel to display the output signal from the speed detector. The horizontal sweep is driven by the 60-cycle line voltage. Both models also contain a precision tuning fork oscillator set at a frequency equivalent to 1000 rpm for a calibration signal.

Details of the pump speed monitor circuits are shown in Figs. 6.16.5 and 6.16.6.

### Reference

Drawing D-2-02-054-9848A, Modified Coupling Hub, MSRE Fuel Pump.

## 6.17 PUMP NOISE MONITOR (MICROPHONES)

### 6.17.1 Introduction

Figure 6.17.1 shows a microphone assembly which is used to monitor noise in the fuel- and coolant-salt pumps. Two microphones of this type are attached to the motor housing of each pump. The microphones are of the dynamic type and are constructed of radiation-resistant materials. Bearing noises and vibrations are detected by the microphone and transduced to proportional electrical signals.

All microphones are connected to a common selector switch in the auxiliary control room. The selected signal is then amplified and used to drive a speaker and a decibel meter. The type of noise is determined by listening to the speaker, and the level is determined by observing the decibel meter. Additional information can be obtained by observing the signal on an oscilloscope.

A two-wire shielded cable is used to transmit the signal from the microphone to the control area. An inorganic-insulated cable* is used for this service inside the reactor cell. The low output impedance of the dynamic microphones minimizes the effects of stray magnetic field and deterioration of cable insulation resistance. For this reason, no special shielding was required in the MSRE microphone circuits, and a considerable amount of moisture absorption can be tolerated in the cable.

To satisfy requirements for remote maintenance or removal of the fuel-salt pump, the microphone cables are routed through disconnects of the type described in Sect. 6.18.

Techniques similar to those described in Sect. 6.7 are used to seal the microphone cable penetration of the reactor containment vessel.

### 6.17.2 Microphone Construction

The microphone assembly (Fig. 6.17.1) consists of a small dynamic microphone encased in a stainless steel housing and held in place by a spring. The microphone coil is constructed of Formvar-insulated copper wire and is encapsulated in a ceramic cartridge with a ceramic potting compound. The coil surrounds a magnetic armature, which is attached to a diaphragm on the face of the cartridge. Acoustical noise and vibrations are transmitted from a stud on the housing, through the housing and diaphragm, to the armature and cause movement of the armature within the coil. This movement induces a signal voltage in the coil which is analogous to the monitored noise or vibration when the coil is properly loaded.

The microphone cartridge was supplied by the Telex Corporation in accordance with ORNL specifications and is similar to the Telex model 18056 cartridge.

*Manufactured by the Rockbestos Wire and Cable Company.

### References

For further information on the construction of the microphone assembly refer to the following company drawing:

1. ORNL drawing Q-1788-7 R3, Noise and Vibration Pickup, Standard Housing, Assembly and Details.

## 6.18 IN-CELL INSTRUMENT DISCONNECTS

### 6.18.1 General

Instrument disconnects, including both electrical and pneumatic, located inside the reactor and drain tank cells, were selected or designed for compatibility with remote handling tools and a high-level radiation environment. Each disconnect consists of a fixed and a movable half installed in a manner to facilitate the removal of equipment for either maintenance or replacement. Maintenance equipment and procedures are described in ORNL-TM-910,[1] pp. 37, 40, and 75.

### 6.18.2 Electrical Disconnects

The six-circuit thermocouple disconnect described in Sect. 6.7.7 is also used where in-cell disconnects are required in instrument electrical circuits. The use of a single type of disconnect for all circuits was preferred for simplification of installation and remote handling requirements. Some installations required modifications to accommodate different types of cable and end seals. Where a 12-pin plug and jack are connected to a two- or three-conductor cable, several pins are connected in parallel to one conductor. This arrangement makes maximum use of the available contact surface. A typical disconnect with a three-conductor cable is shown in Fig. 6.18.1.[2] Thermoelectric effects due to the dissimilar plug and jack materials (Chromel and Alumel) are either canceled or reduced to a minimum in the dc circuits by the proper connection of wires and are ineffective in ac circuits.

**6.18.2.1 Valve-position indicator circuit disconnect.** The type B disconnect shown in Fig. 6.18.1 is used in the valve-position indicator circuits. A typical in-cell valve installation is shown in Fig. 6.18.2. Two aluminum housings are stacked together to form the top

half (female) of the disconnect. In this case, the second box serves as an adapter which provides space for accommodating the end seal of the mineral-insulated cable connected to it. These cables are routed through the cell penetrations from a junction box outside the cell and are connected to the female disconnects with sufficient slack to allow movement for disconnection. The bottom half (male) of the disconnect is fixed to a support plate attached to the valve and is removable with the valve. The position indicator switches are connected to the male disconnect with an inorganic-insulated cable (Micatemp – manufactured by Rockbestos Wire and Cable Company) run through ¼-in.-OD copper tubing which is attached to the bottom side of the disconnect housing with a swage-type compression tube fitting. No end seals are used on these cables.

**6.18.2.2 Drain tank level probe circuit disconnect.** The drain tank level probe circuits (see Sect. 6.10) are wired with mineral-insulated cable connected to both halves of the type A disconnect as shown in Fig. 6.18.1.[2] The mineral-insulated cable and end seals are the same as shown for type B, but instead of stacking two housings, a pipe adapter protruding from the wall of a single housing is used to accommodate the end seals. The upper half (female) of the disconnect is connected to the level probe, which is removable. The lower half (male) of the disconnect is mounted on a fixed support and is connected to the cable, which extends through the cell penetration to the terminal box outside the cell.

**6.18.2.3 Fuel pump speed indicator circuit disconnect.** Due to space limitation and lead-wire cable interference with other equipment near the fuel pump, the three fuel pump speed indicator circuits are served by two disconnects connected in series with jumper cables.[3] One disconnect, enclosed in a stainless steel housing, is supported from the motor flange of the pump bearing housing. The other disconnect, enclosed in an aluminum housing, is located near the reactor cell wall. The upper halves (female) of both disconnects and their jumper cables may be removed to permit maintenance of other equipment. The two disconnects are fitted with partitions which separate the three channels from each other, as required for wiring in the safety system, of which these circuits are an integral part. The lower half (male) of the disconnect, mounted on the pump, is connected to the speed elements with mineral-insulated cables sheathed in ¼-in.-OD stainless steel tubing. The ends of these cables are sealed with Physical Science Corporation 0900 glaze compound. The lower half (male) of the disconnect, mounted on a fixed support near the cell wall, is connected to Micatemp (inorganic insulation) cables inserted in ¼-in.-OD copper tubing and routed through the cell penetrations to a junction box outside the reactor cell. The disconnect ends of these cables have glass-to-metal seals, and the junction box ends have epoxy seals similar to thermocouple cables shown in Fig. 6.7.21. The jumper cables consist of Micatemp cables run in ¼-in.-OD copper tubing and have no end seals since both ends terminate inside the cell. Details of these disconnects are shown on ORNL drawing D-HH-Z-41784.[4]

### 6.18.3 Instrument Air Line Disconnects

Figures 6.18.3*A* and 6.18.3*B* show details of disconnects used for connecting instrument air lines to pneumatic control valves located in the reactor and drain tank cells. The original disconnects (identified in the figures as existing) were a commercial type fitted with elastomer seals. They can also be seen in Fig. 6.18.2, which shows a typical valve installation. Leaks developed in these disconnects after a period of operation due to embrittlement of the elastomer.[13] Modifications were made to eliminate the elastomer seals as shown in the figures.

Figure 6.18.4 shows the type of disconnect used in leak detector lines and in lines connected to the drain tank weigh cells.[5] The disconnect, designed at ORNL,[14] is a remotely operable[1] joint consisting of a pair of mating conical surfaces forced together by a single bolt mounted in a pivoted yoke. Figure 6.18.5 shows a typical installation.

Disconnect installation details are shown in Refs. 6 through 12.

### References

1. E. C. Hise and R. Blumberg, *MSRE Design and Operations Report, Part X, Maintenance Equipment and Procedures,* ORNL-TM-910 (June 1968).

2. ORNL drawing D-HH-Z-41637, Auxiliary Disconnect for Reactor and Drain Tank, Details.

3. ORNL drawing E-HH-B-41713, Reactor Cell, Thermocouple Routing to Disconnects, Plan View.

4. ORNL drawing D-HH-Z-41784, Fuel-Salt Pump Speed Element, Disconnect and Cable, Assembly and Details.

5. ORNL drawing D-LL-E-40734, Quick Disconnect, Block and Yoke Details.

6. ORNL drawing E-GG-55489, Reactor Cell Disconnects, Elec., Inst. Air, and L.D.

7. ORNL drawing E-GG-Z-56350, As-Built Reactor Cell Disconnects, Air, Elect., Inst. and L.D.

8. ORNL drawing E-GG-Z-55490, Reactor Cell Disconnects, Details.

9. ORNL drawing E-GG-Z-40878, Drain Tank Cell, Plan Showing Location for TE, Heater, and Air Disconnects.

10. ORNL drawing E-GG-Z-56424, Drain Tank Cell, Valve Supports, Assembly.

11. ORNL drawing E-GG-Z-55478, Drain Tank Cell Disconnects, Details 1 through 7.

12. ORNL drawing E-GG-Z-56405, Drain Tank Weigh Cell Disconnect Locations.

13. M. W. Rosenthal, *MSR Program Progr. Rep. Sept. 1, 1966 to Feb. 28, 1967,* ORNL-4119, pp. 37 and 61 (June 1967).

14. P. P. Holz, *Development of Six-Station Manifold Disconnect,* CF-61-5-117 (May 18, 1961).

## 6.19 HELIUM FLOW ELEMENTS AND RESTRICTORS

### 6.19.1 Introduction

Helium flow rates in the MSRE are measured in the main helium supply line and in the fuel and coolant system pump purge and upper gas letdown lines. Normal operating flow rates in these lines range from a maximum of 10 scfm in the supply line to less than 0.1 scfm in the upper gas letdown lines. Matrix-type flow elements of the type shown in Fig. 6.19.1 are used to measure these low flows. The matrix element consists basically of a packed bed of small glass spheres. Flow of helium through this bed produces a pressure drop which is proportional to the flow rate. Differential pressure transmitters of the type described in Sect. 6.3 are used to measure this pressure drop.

The use of matrix flow elements in the MSRE offered the following advantages over the orifice, venturi, and capillary-type flow elements commonly used for gas flow measurements:

1. The matrix-type element is easier to fabricate and is less susceptible to plugging than the other types, since very small inside diameters are required to obtain adequate differential pressure signals from orifices, venturis, or capillaries at the low MSRE flow rates.

2. The signal produced by the matrix-type element is a linear function of flow. The signal produced by the capillary-type element is also linear when properly sized, and in this respect the matrix-type element offers no advantage over the capillary. Orifices and venturis, however, have square root characteristics which must be compensated when data are used for computation and which result in reduced accuracy at lower flow rates.

The capillary-type flow element was the second choice for measurement of MSRE helium flow and was used for gas flow measurement in the chemical process system and the cell air evacuation line.

Figure 6.19.2 shows a capillary element used extensively for helium flow restriction in the fuel sampler-enricher and chemical process sampler systems, the fuel and coolant salt system bubbler-purge and upper gas letdown lines, and the fuel salt system drain tank supply lines (see Sects. 3.1 through 3.5, 3.12, and 6.8). In these applications, the requirements for calibration accuracy are less demanding than for the flow elements discussed above, and pressure taps are not required. Maximum flow rates in these applications range from 70 scfm in the smallest restrictor to 10,000 scfm in the largest.

Because of the reduced accuracy requirements and the elimination of pressure taps, the construction of capillary restrictors is simpler than that of matrix flow restrictors, fabrication is easier, and cost is considerably reduced. These considerations weighed heavily in favor of using capillary elements for flow restriction instead of matrix-type elements.

Since most of the flow elements and restrictors are located in lines containing radioactive gases, weld-sealed construction is used, and connections are made with helium leak-tight (autoclave) fittings.

### 6.19.2 Construction

**6.19.2.1 Matrix-type flow element.** The flow element shown in Fig. 6.19.1 consists basically of a packed bed of small glass spheres contained in a section of stainless steel pipe. Dutch twill filter screens at each end of the matrix (packed bed) contain the glass beads and prevent the passage of particulates which could alter the characteristics of the element. The relatively large area of the filter screens, as compared to the port area of similarly sized orifices or capillary elements, reduces the probability of plugging. Process connections are made by end pieces welded to the pipe and machined to mate with standard autoclave fittings. Pressure taps are welded to the pipe between the filter screens at points within the matrix. By locating the taps in this manner, the effects of pressure drops across the filter screens and end effects on the flow characteristics of the matrix are eliminated. The signal measured is therefore the pressure drop across a section within the matrix. Filter screens are also provided at the taps to contain the bed and to prevent particulate contamination of the bed. The taps are constructed of standard autoclave tubing and are shaped and prepared for mating directly with

female autoclave-type fittings machined in the body of the differential pressure cell. In some cases, the taps were bent or shortened in the field to conform with individual installation requirements. All weld joints were designed to permit full penetration of the weld metal.

The matrix flow elements used in the MSRE were fabricated by the Hanover Instrument Company* in accordance with ORNL specifications. The matrix section of the element is a proprietary item for which Hanover has a patent pending.

**6.19.2.2 Capillary flow restrictors.** The flow restrictor shown in Fig. 6.19.2 consists of a coiled section of stainless steel capillary tubing enclosed in a sealed protective housing and provided with end fittings for connection to process lines. The end fittings are machined to mate with standard autoclave fittings and drilled to match the outside diameter of the capillary. The capillary extends through the fitting and is welded at the tip end. Considerable care was required in making the weld to avoid altering the inside diameter of the capillary at the tip. Final coning of the fitting was done after the weld was made. The housing consists of two modified pipe caps welded to a section of pipe and to the end fittings. This housing serves three purposes. It provides a means of testing the assembly for leaks with a mass-spectrometer-type leak detector, it provides protection against mechanical damage to the capillary, and it will provide additional protection against leakage of helium or radioactive gases if a leak develops in the capillary during reactor operation. All materials used in the flow restrictor assembly are 300-series stainless steels.

### 6.19.3 Flow Characteristics

**6.19.3.1 Matrix-type flow element.** When flow in the element is laminar, the differential pressure signal produced by the matrix flow element is given by the expression:

$$\Delta P = \frac{K_1 Q L y^2 (1-e)^2}{A D_p y g e^3}, \qquad (1)$$

where

$\Delta P$ = pressure drop,

$K$ = constant,

$A$ = cross-sectional area of the matrix,

$Q$ = volumetric gas flow rate (actual),

$L$ = matrix layer thickness,

$y$ = shape constant,

$e$ = relative void volume,

$D_p$ = particle diameter,

$g$ = acceleration,

$\mu$ = viscosity (absolute).

For a given matrix configuration, factors $A$, $L$, $y$, $e$, $D_p$, and $g$ are constant and Eq. (1) reduces to:

$$\Delta P = K' Q \mu, \qquad (2)$$

where $K'$ is a meter constant.

Equation (2) shows that the differential pressure signal is proportional to the volumetric flow rate and to the viscosity. Since viscosity is a function of temperature, the gas temperature must be known to obtain the true volumetric flow rate.

The volume rate measured is the actual volume at absolute pressure and temperature; thus pressure and temperature corrections are necessary to convert to standard volume units. Also, the above expressions [Eqs. (1) and (2)] assume that the pressure is equal throughout the matrix. In actual practice, a pressure drop exists in the matrix, and the following relationship applies:

$$Q_c = Q_1 \left(1 - \frac{\Delta P}{2P_1}\right) = Q_1 \lambda, \qquad (3)$$

where

$Q_c$ = corrected flow,

$Q_1$ = measured flow,

$\Delta P$ = pressure drop,

$P_1$ = pressure at the upstream tap.

In most MSRE applications the pressure term is very large in comparison to the pressure drop, and the correction factor ($\lambda$) can be ignored.

**6.19.3.2 Capillary flow restrictors.** When laminar flow conditions exist in the capillary, the flow through the capillary is given by the expression:

$$Q = \frac{K(P_1 + P_2)\, d^4\, \Delta P}{\mu T L}, \qquad (4)$$

*Croydon, Pa.; formerly Hughes Instrument Company.

where

$Q$ = volumetric gas flow rate (standard units),

$P_1$ = upstream pressure (absolute),

$P_2$ = downstream pressure (absolute),

$\Delta P$ = pressure drop,

$d$ = capillary inside diameter,

$L$ = capillary length,

$K$ = proportionality constant,

$\mu$ = viscosity,

$T$ = temperature (absolute).

Since $d$ and $L$ are constant for a given capillary and since $P_2 = 2P_1 - \Delta P$, Eq. (4) can be reduced to:

$$Q = \frac{K'(2P_1 - \Delta P)\,\Delta P}{\mu T}, \qquad (5)$$

where $K'$ is a meter constant.

Equation (5) shows that, when the pressure drop is small in comparison to the operating pressure, the flow is directly proportional to the pressure drop. This condition usually applies when capillaries are used for flow measurement but does not apply in the case of flow restrictors which have appreciable pressure drop. For this reason, the flow characteristics of the MSRE flow restrictors are slightly nonlinear.

Equation (5) also shows that the flow rate is a function of inlet pressure, viscosity, and temperature. In MSRE applications, these parameters are relatively constant and do not present a problem.

From Eq. (4), it should be noted that the flow rate is directly proportional to the fourth power of the inside diameter and inversely proportional to the first power of the length. From this it is apparent that doubling the inside diameter requires the length to be changed by a factor of 16 to obtain the same flow characteristics. For this reason, capillaries with very small inside diameters (0.006 to 0.050 in.) were required for the low MSRE flow rates.

### References

For further details on the MSRE matrix-type flow elements and capillary restrictors see the following reference drawings:

1. ORNL drawing D-HH-Z-41778, Capillary Restrictor, Assembly and Details.

2. Hanover Instrument Company drawing DP-2000XAE-1, Flow Element, Assembly.

3. Hanover Instrument Company drawing SK-2000-XAE-2, End Fitting Detail.

4. Hanover Instrument Company drawing SK-2000-XAE-3, Assembly and Weld Detail.

## 6.20 ELECTRIC SOLENOID VALVE, WELD-SEALED

### 6.20.1 Introduction

The weld-sealed electric solenoid valves shown in Fig. 6.20.1 are for service in the helium cover gas system, where a high degree of cleanliness, absolute containment of the process fluid, and tight shutoff characteristics are required. In the MSRE, they are used for primary containment block valves in small, low-capacity helium purge lines such as the fuel- and coolant-salt bubbler level system supply, fuel pump bowl cover gas supply, and sampler-enricher purge supply. They also serve as block valves in the lines connecting the off-gas sampler to the fuel off-gas line and in the fuel sampler-enricher off-gas system.

### 6.20.2 Physical Construction and Performance Characteristics

The valves are of two classifications designated as follows:

Type I – process connections: Autoclave Engineers, Inc., ¼-in., 30,000 psi rating; port size, 3/32-in. diameter (see Fig. 6.20.2).

Type III – process connections: ½-in. sched 40 pipe nipples; port size, ⅜-in. diameter (see Fig. 6.20.3).

Except for these distinguishing features, the construction of both the type I and the type III valves is identical. They are packless direct solenoid-operated normally closed globe-type shutoff valves. Each valve unit consists of a weld-sealed subassembly and separate removable solenoid assembly. The design pressure rating of the valve body is 200 psig at 200°F. The operating pressure range is 29 in. Hg vacuum to 50 psig. The maximum differential pressure for the type I valve is 50 psig applied to either side of the seat. For the type III valve, which has the larger port opening, it is 50 psig if applied over the seat and only 30 psig if applied under the seat. The type III valve is designed for use in the fuel sampler-enricher vacuum system, where the larger port opening helps to reduce the pumping time required to produce high vacuum pressures. The actuating coil, enclosed in a weatherproof housing, is rated for continuous operation with 48 V dc applied. Power

consumption is approximately 50 W. When the coil is deenergized, the force exerted by the coil spring on the plunger holds the O-ring seal against the port seat, and the valve is closed. When the coil is energized, the resulting magnetic force, acting on the plunger, overcomes the spring force plus the force exerted by pressure applied over the seat; the plunger moves upward, lifting the O-ring seal off the port seat to open the valve.

Although the valve design is conventional, several unique features make it a high-performance component of exceptional quality. First, the weld-sealed joint between the bobbin insert and the valve body assures the absolute containment of the process fluid. On the type III valve, the ½-in. pipe nipples are also seal-welded to the valve body. Second, strict procedures governing material composition, cleanliness, and fabrication methods were observed during the construction and testing operations. Finally, each valve was subjected to rigid performance tests before it was accepted for use in the reactor system. Leak tests with a mass spectrometer demonstrated that the leakage of process fluid from each valve body is less than $1 \times 10^{-8}$ cc of helium per second and through each seat is less than $1 \times 10^{-6}$ cc of helium per second.

The design, fabrication, and testing of these valves are described by the company specifications[1] and the vendor's construction drawings and test reports.[2]

### References


1. Specifications JS-81-188 and JS-81-188B, Weld-Sealed Electric Solenoid Valve for the Molten-Salt Reactor Experiment.
2. Valcor Engineering Company drawings:

V-52600 – Valve, Solenoid, 2-Way
V-52600-03 – Valve, Solenoid, 2-Way
V-52603 – Plunger
V-52603-03 – Plunger
V-52609 – Housing Assembly
V-52610 – Body
V-52610-03 – Body
V-52613 – Nameplate
V-52613-03 – Nameplate
V-52615-03 – Nipple
V-52616 – Plunger Assembly
V-52616-03 – Plunger Assembly
V-52617-03 – Screw Plug
V-52618 – Bobbin Insert
V-52622 – Ring, Weld
V-52623 – Housing
V-52624 – Boss
V-52625 – Bobbin – Insert Pin Assembly
V-52630 – Solenoid Assembly
V-52631 – Bobbin – End Blank
V-52632 – Bobbin Assembly Blank
V-52633 – Bobbin Assembly (Machined)
V-50304 – Spring
V-50317 – Screw Plug
S-101Y2 – Rubber Y Compound
S-101Y11 – Rubber Y Compound
S-120 – Material Specification
S-301 – Cleaning Procedure
S-1101 – Welding Procedure
P/N V-52600 – Test Procedure
P/N V-52600 – Test Procedure
P/N V-52600-03 – Test Report
P/N V-52600-03 – Test Report
P/N V-52600 – Service Instructions


## 6.21 THERMOCOUPLE TEST ASSEMBLY FOR TEMPERATURE SAFETY CHANNELS

The ORNL *Standard for the Design of Reliable Reactor Protective Systems*[1] requires that class A safety or protective systems* shall be provided with built-in monitoring or testing equipment such that the operability of each channel can be verified during operation of the plant. Further requirements include the following:

1. The test shall include as much of the system as possible; that is, it is desirable that the flux or temperature, for example, be perturbed so as to include the sensor and, where possible, the final safety actuator such as safety rod or valve be actuated.
2. The test shall simulate as faithfully as possible the actual behavior of the parameter.
3. The test shall not interfere with the correct operation of the channel during test; that is, the test signal shall supplement or be superimposed on the normal signal.
4. Frequency of tests shall be related to the predicted or experienced failure rate.
5. The system employed for testing must be so arranged as to constitute minimal breach of channel isolation. If the system for testing is common to otherwise separate channels of a safety system, the layout shall be such as to not increase the probability of a single fault failing all channels. Failures originating in the test equipment shall not affect the safe operation of more than a single channel.

*Class A systems are applicable to plants with long operating cycles, whereas class B systems are applicable only to plants having short operating cycles.

6. Where possible and practical, performance of the test shall not require disassembly of the channel.†

Since the MSRE reactor outlet temperature and radiator outlet temperature safety channels fall within the definition of class A system, the above requirements were applicable. In these instances, however, testing of individual channels by perturbing the process temperature was not possible, and no means of perturbing individual sensor temperatures was apparent which was practical and consistent with operational and Instrumentation and Controls Division requirements. It was therefore decided that tests would be made by perturbing the signal.

To produce the required signal perturbation in a manner consistent with the requirements of the standards, the device shown in Fig. 6.21.1 was developed. The device consists of a vacuum thermocouple assembly of the type frequently used to measure the rms value of rf currents and an associated transformer and push-button switch. The vacuum thermocouple consists of a fine-wire heater supported at each end, with a fine-wire thermocouple attached to its center by a ceramic bead. This whole assembly is sealed in an evacuated glass bulb. By passing a current through the heater, an electromotive force (emf) is generated by the thermocouple. The emf generated is approximately 0.07 mV/mA, with the maximum permissible current being 200 mA. Thus the full-range output is approximately 14 mV, which is equivalent to 560° on the Chromel-Alumel thermocouple scale. Leads of the device may be connected to simulate either a temperature increase or decrease, depending on the polarity of the voltage output.

Use of this device permits tests to be performed without disconnecting any wire. Construction is such that physical separation and electrical isolation of redundant safety channels is maintained, and there is no apparent mechanism by which a failure in the test device could cause an unsafe failure of the associated safety channel.

### Reference

1. E. P. Epler (unpublished).

†Where it is necessary routinely to disassemble a channel or portions of a channel to conduct these tests, provision shall be made to verify the proper reassembly of the channel.

## 6.22 CLOSED-CIRCUIT TELEVISION SYSTEM FOR REMOTE MAINTENANCE OPERATIONS

### 6.22.1 Introduction

The ease with which maintenance of radioactive systems can be performed is strongly dependent on the ability to view the operation. In portions of the MSRE, the radiation levels are very high, and viewing must be accomplished directly through high-density windows or indirectly by means of optical devices or closed-circuit television. In most cases, the use of windows or optical devices is preferred; however, in some cases, supplementary viewing with closed-circuit television is necessary.

The use of television in MSRE maintenance operations is presently limited to those operations associated with removal of large components. For these operations, large cell access openings are required, and the maintenance operations must be performed remotely from a shielded maintenance control room. To supplement the direct view available through windows in the maintenance control room, a radiation-resistant closed-circuit television system was provided.

### 6.22.2 Design Considerations

Since remote maintenance operations are often lengthy and complex and since the consequences of mistakes can be serious, it is imperative that the television equipment used in these operations provide the operator with as much information as possible and not cause undue fatigue. It is also important that the equipment be in operating condition when needed. To avoid operator fatigue, the equipment must be easy to operate and capable of producing stable, high-quality pictures under a variety of lighting conditions. To obtain maximum information, good picture resolution and a means of determining distance or depth are required. To ensure that the equipment will operate when needed, the equipment must be rugged, reliable, and compatible with environmental conditions.

The requirements for ease of operation, picture quality and stability, ruggedness, reliability, and environmental compatibility dictated the use of a high-performance system with radiation-resistant cameras and with auxiliary electronic and control equipment consolidated at a centralized location and, to some extent, automated.

The requirements for depth perception dictated the use of either a three-dimensional (3D) system or an orthogonal (right angle) viewing system. Both types of

systems were tested in the molten-salt remote maintenance demonstration facility.

Two types of three-dimensional viewing were tested – a single camera and a two-camera system. While good three-dimensional effects were obtained with both 3D systems under certain conditions, it was found that an excessive amount of maintenance and operational adjustments was required to prevent the occurrence of eyestrain and operator fatigue after prolonged use of the equipment. It was also found that the ability to perceive three-dimensional effects varied with the individual operator and that some were incapable of perceiving any effect.

In the orthogonal system, the operation is viewed from two directions (preferably at right angles) with two separate camera systems, and the signals from the two cameras are displayed on separate monitors. No problems were encountered in tests of this system other than the need to have an unobstructed view of the operation from two directions and the need to watch two monitors simultaneously. In tests involving the movement of large components, these limitations did not present serious difficulties.

From these tests it was concluded that orthogonal viewing was preferable to three-dimensional viewing for MSRE maintenance operations, and the MSRE system was designed accordingly.

The design of the MSRE system and the selection and procurement of components were also influenced by prior experience at ORNL with the use of closed-circuit television in maintenance operation at the Homogeneous Reactor Test.[1] The design was additionally influenced by experience with the orthogonal viewing technique gained by others in similar operations at Atomics International.

The HRT operations demonstrated that the use of television for viewing in high-level radiation environments was practical. The experience at Atomics International demonstrated that orthogonal viewing was preferable to three-dimensional viewing for remote maintenance operations. Both operations demonstrated that systems used for remote maintenance must be rugged and easy to operate and must have a high degree of performance and reliability.

### 6.22.3 System Description

Figure 6.22.1 shows a camera assembly used in MSRE maintenance operations. The assembly consists of a Kintel model 2512 camera, a Wollensak nonbrowning zoom lens, a preamplifier, and the necessary interconnection and control cables. The camera and the preamplifier are mounted on portable stands which can be moved by use of an overhead crane. Three camera systems were provided, one of which functions as an operating spare. The cameras are radiation and shock resistant and will withstand continuous exposure to 1-MeV gamma radiation, of the order of $10^5$ R/hr, for 100 hr with little degradation of performance. Replacement of the Vidicon and the lens will restore the camera performance until the camera has accumulated a radiation dosage of $10^9$ R. Each camera is connected by 50 ft of radiation-resistant cable to the preamplifier, which, in turn, is connected by a 100-ft cable to a camera control unit. The preamplifier is not radiation resistant and must be shielded from high-level radiation. The camera control units for the three cameras are mounted in a console in the maintenance control room together with the monitors and associated camera controls. Figure 6.22.2 shows the assembled console. Although three camera systems are installed, only two monitors are used. A video switching system permits the operator to display the signal from any of the three cameras on either or both monitors. The "joy stick" controls mounted on the front of the console table enable the operator to control pan, tilt, focus, and zoom motions with wrist and finger actions. Other, less frequently used, controls and adjustments are located on the sloping panel in front of the operator. Space was provided on the table for the addition of crane controls.

Figure 6.22.3 shows the console panel. Adjustments and controls for the camera video and sweep circuits are located in the camera control units located in the lower section of the panel. All commonly used adjustments are available at the front of the panel. These adjustments are used primarily for initial setup of the equipment. When the automatic target control feature is used to compensate for variations in lighting, little adjustment is required during operation. The video switching panel, shown at lower right, is used to select the desired combination of monitors and cameras. The camera control units utilize plug-in construction and, except for the addition of the video switching unit, are standard Kintel 3900-series assemblies. The pan and tilt control units (upper right and left center) are standard ITT model PT-H-1 assemblies that have been modified to permit pan and tilt action to be performed by the joy stick. A local-remote switch enables the operator to select local (front panel) control or remote (joy stick) control. The Wollensak zoom lens controls, at upper left, have also been modified to permit joy stick operation. Remote operation of the lens is accomplished with a solenoid-operated cable assembly. This cable assembly does not interfere with local operation

of the lens control switches, and a local-remote switch was not needed.

Except for the Vidicon and a small (Nuvistor) vacuum tube in the camera, the system uses solid-state components throughout.

### 6.22.4 Performance Characteristics

The complete system produces high-quality pictures, and performance is stable over a wide range of variation of line voltage, line frequency, ambient temperature, and humidity. Some of the more important performance characteristics are listed below. Additional details are given in Refs. 1 through 6.

Horizontal resolution – 650 lines in the center of the picture and 550 lines in the corner.

Vertical resolution – 350 lines in the center and corners of the picture.

Geometry distortion – less than 2% of picture height.

Sensitivity (with 1-in. focal length, *f*/1.5 lens) – 400 lines horizontal resolution with 1-ft-c average scene illumination; 1 V negative video and 0.4 V sync signal with 10 ft-c.

Scanning standard – 525 lines, 2.1 interlace, with a vertical field frequency of 60 cps and a vertical frame frequency of 30 cps.

Synchronization generator – Produces pulses in accordance with recommendations of EIA standard RS-170. Horizontal and vertical pulses are obtained by count down from master oscillator frequency. Line-locked or free-running operation.

Automatic light compensation – Less than 6 dB video amplitude variation over range of scene illumination variation from 5 ft-c to 10,000 ft-c, with a full-range adjustment time of 0.25 sec.

Camera radiation tolerance (standard Vidicon) – 550 lines resolution after $10^7$ R accumulated dose (1-MeV gamma). Replacement of Vidicon and/or lens will restore the camera performance until the camera has accumulated a dose of $10^9$ R (1-MeV gamma). Use of Vidicon with nonbrowning faceplate will extend allowable dosage before Vidicon replacement.

Lens radiation tolerance – Less than 5% transmission loss between 4500 Å and 7000 Å after $10^6$ R accumulated dose from $^{60}$Co at 240 R/min. Greatest loss occurs at shortest wavelength.

### References

1. R. L. Moore, *Closed-Circuit Television Viewing in Maintenance of Radioactive Systems at ORNL*, ORNL-TM-2032.

2. For further details on the MSRE closed-circuit television systems see the following reference documents or ORNL drawings:

ORNL job specification JS-91-200, High-Performance, Closed-Circuit Television Camera System for the Molten-Salt Reactor Experiment.

ORNL job specification JS-81-200A, Radiation-Resistant, High-Performance Closed-Circuit Television System for the Molten-Salt Reactor Experiment.

ORNL job specification JS-202, High-Performance, Closed-Circuit Television Monitor for the Molten-Salt Reactor Experiment.

Instruction Manual, 2500 Series, Radiation-Tolerant Television Camera, Kintel Division, Cohu Electronics Inc., San Diego, Calif.

Operating and Maintenance Instructions for 3900 Series Plug-In Sync Generators, Kintel Division, Cohu Electronics.

Operating and Maintenance Instructions for 3900 Series, High Resolution, Closed-Circuit Television, Camera Controls, Kintel Division, Cohu Electronics.

Cohu Electronics drawing C-7410624, Cable Assembly, 3900 Camera Control to Junction Box.

Cohu Electronics drawing D-8388100, Schematic Diagram, Radiation Camera.

Cohu Electronics drawing D-8388300, Schematic Diagram, Deflection.

Cohu Electronics drawing D-8388400, Schematic Diagram, Video Preamp.

Cohu Electronics drawing D-8388950, Wiring Diagram, Preamp, Radiation Camera.

Cohu Electronics drawing D-8388956, Cable Assembly, Preamp to Radiation Camera.

ORNL drawing D-HH-B-48972, TV Camera Lens Control Panel.

ORNL drawing D-HH-B-48973, TV Camera Remote Control Wiring.

ORNL drawing D-HH-B-48974, TV System Block Diagram.

ORNL drawing D-HH-B-48975, TV Camera Pan and Tilt, Variable Control, Panel Wiring Schematic.

## 6.23 AUTOMATIC RANGE CHANGE CIRCUITS FOR THE FUEL PUMP LEVEL SYSTEMS

Two bubbler-type liquid level detecting systems are used to measure the salt level in the MSRE fuel pump bowl. The level signal is obtained by measuring the differential between the pressure in the gas space above the molten salt and the pressure inside the dip tube. When the tube is purged with a small gas flow, the differential pressure produced is proportional to the

height of the salt above the bottom of the dip tube. This differential pressure is measured by two Foxboro Instrument Company E.C.I. transmitters, LT-593C and LT-596B, as shown in Fig. 4.9.5. Each transmitter produces a 10- to 50-mA output signal that is proportional to the measured differential. The The 10- to 50-mA current is the input signal for all receiving devices such as signal modifiers, recorders, and indicators connected in the circuit. A detailed description of the bubbler systems is given in Sects. 4.9.8 and 6.8 of this report. The Foxboro E.C.I. system is described in Sect. 5.2.2.

The calibration of bubbler-type level systems is based on the assumption that the density of the liquid being measured will remain constant, but in the MSRE, two liquids, fuel salt and flush salt, having slightly different densities, are used interchangeably. The two pump bowl level systems are required to operate continuously regardless of the type of salt in use; therefore, some means of automatically adjusting the calibration of the transmitters must be provided to compensate for the change in liquid density when changing from one type of fuel salt to the other. This is accomplished by adding range-changing resistors to the signal transmission circuit of both differential transmitters as shown in Fig. 6.23.1. The circuit is typical for both LT-593C and LT-596B.

The range-changing resistors are connected in the circuit when relay KB94 is energized and contacts KB94A and KB94C are closed. Relay KB94 is energized through circuit 94, which is also shown in Fig. 6.23.1. When the reactor system is filled with fuel salt, the drain tank selector switch S6 is in the FD1 or FD2 position (see Sect. 4.2.4.1). In either position, selector switch contact S6T is open, relay KB94 is deenergized, and the range-change resistors are not in the transmitter signal circuit. The maximum change in fuel salt level is equivalent to 22.4 in. $H_2O$ differential pressure.* Each transmitter is first calibrated, with the range-change resistor circuits open, to transmit a 50-mA output signal when 22.4 in. $H_2O$ differential is applied. This calibration, shown by curve 1 in Fig. 6.23.2, is used when fuel salt is in the pump bowl.

When the reactor is filled with flush salt, the drain tank selector switch S6 is in the FFT position. In this position, switch contact S6T is closed, relay KB94 is energized, and contacts KB94A and KB94C are both closed. This connects resistor $R_1$ in parallel with the transmitter feedback motor so that a portion of the amplifier current is shunted around the motor. This unbalances the system if the applied differential pressure remains the same, and the output current flowing through the indicator and the amplifier must increase to return the transmitter to a force-balance condition. For example, assume that contacts KB94A and KB94C are open and the transmitter is in a balanced condition with 22.4 in. $H_2O$ differential applied. Under these conditions, the output current in all parts of the current loop, including the feedback motor, is 50 mA. Now, if contact KB94A is closed, the current in the feedback motor is reduced by the amount shunted through resistor $R_1$, but the current from the amplifier will automatically increase until the 50 mA needed to rebalance the system is again flowing through the feedback motor. Obviously the current flowing through the indicator and the amplifier under these conditions is greater than 50 mA. By shunting the feedback motor, we have increased the gain of the transmitter; that is to say, more output current is produced per psi of applied differential pressure. This is another way of saying that the measuring range of the transmitter has been reduced because some value of applied differential that is less than 22.4 in. $H_2O$ will now produce the full-scale current flow of 50 mA through the indicator and the amplifier. Resistor $R_1$ can be adjusted until 19 in. $H_2O$ differential pressure produces the full-scale current flow of 50 mA through the indicator and the amplifier. The calibration of the transmitter after this adjustment is represented by curve 2 in Fig. 6.23.2. Note that this adjustment also shifts the zero point; that is, at zero differential pressure, the output current is no longer 10 mA but is slightly greater than 10 mA. This condition is corrected by applying zero differential pressure to the transmitter and adjusting the value of resistor $R_2$, which is also connected in the circuit. The $R_2$ circuit adds a small amount of current flow from the power supply to the feedback motor, and the system maintains a condition of force balance by reducing the current flow through the indicator and the amplifier. Proper adjustment of resistor $R_2$ will return the value of output current to 10 mA with zero differential applied. The calibration of the transmitter after the zero adjustment is represented by curve 3 in Fig. 6.23.2. The span and zero adjustments interact with one another to some extent; therefore the range and zero adjustments must be repeated several times before the calibration represented by curve 3 is achieved.

The transmitter now has a new measuring range. Applied differential pressures ranging from 0 to 19 in. $H_2O$ will produce a proportional 10- to 50-mA output signal. The instrument is now calibrated for use in flush

*For fuel salt density of 140 lb/ft$^3$.

salt, since the maximum change in flush salt level is equivalent to 19 in. $H_2O$ differential pressure.†

In summary, then, the fuel salt level transmitters, LT-593C and LT-596B, have two calibrated range spans. One is 22.4 in. $H_2O$ differential for use when the pump bowl contains fuel salt, and the other is 19 in. $H_2O$ differential for use when the bowl contains flush salt. The change from one range span to the other occurs automatically when the drain tank selector switch S6 is moved to the FFT position from either of the two drain tank positions, FD1 and FD2. In the FD1 and FD2 positions (fuel salt in use), the differential pressure transmitters are calibrated, without the range-change resistors shown in Fig. 6.23.1, to produce an output signal current of 10 to 50 mA that is proportional to measured differential pressures in the range of 0 to 22.4 in. $H_2O$. With switch S6 in the FFT position (flush salt in use), the range-change resistors are connected in the circuit, and the differential pressure transmitters are calibrated to produce an output signal current of 10 to 50 mA that is proportional to measured differential pressures in the range of 0 to 19 in. $H_2O$.

†For flush salt density of 118.6 lb/ft$^3$.

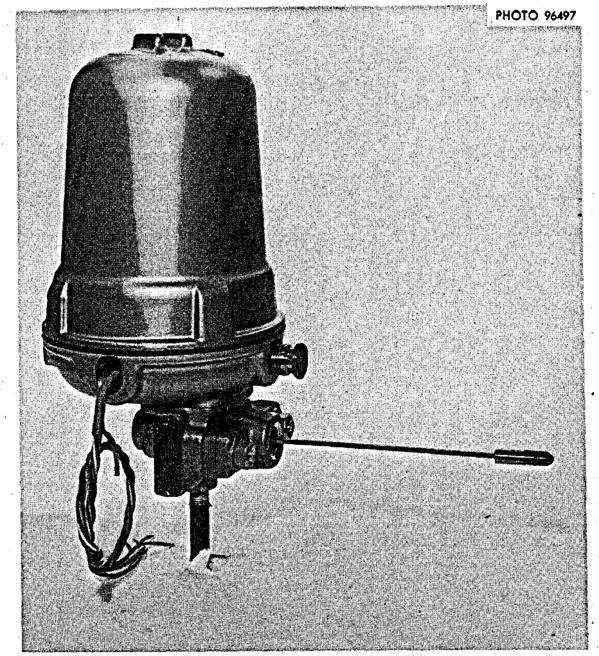


Fig. 6.1.1. Foxboro Instrument Company type 611 GM-ASX weld-sealed pressure transmitter.

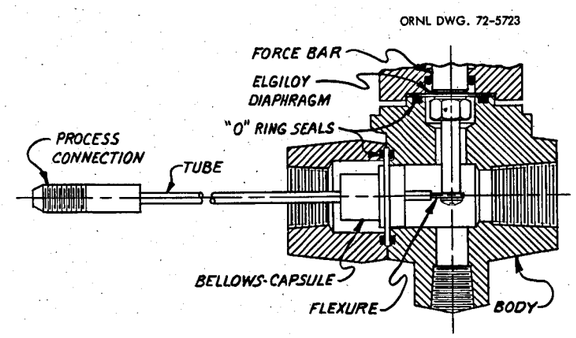


Fig. 6.1.2. Weld-sealed pressure transmitter body and bellows-capsule assembly.

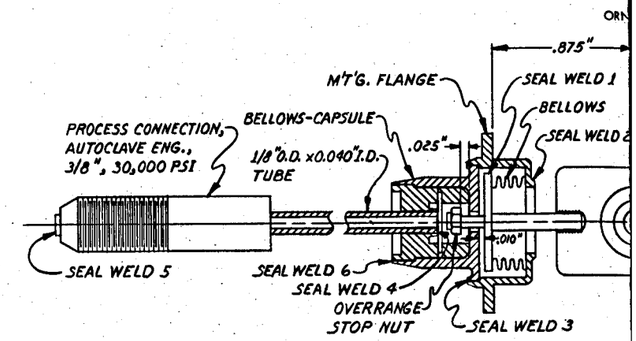


Fig. 6.1.3. Weld-sealed pressure transmitter bellows-capsule subasse

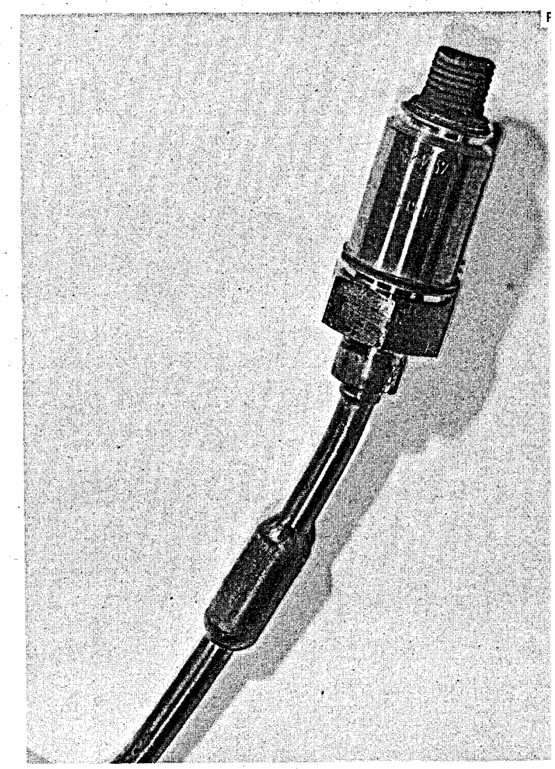

Fig. 6.1.4. Dynisco model APT4S-SP-1C pressure transmitte

1 2 12

L DWG. 72-5724

FLEXURE

mbly.

HOTO 96498

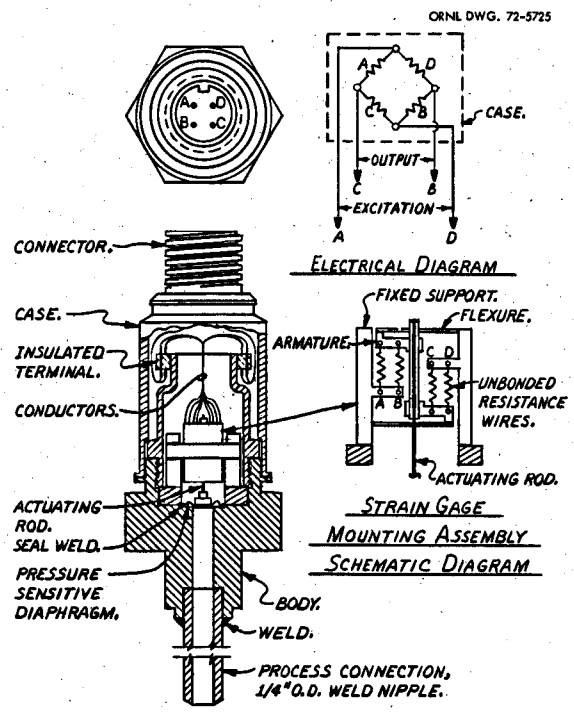


**Fig. 6.1.5. Dynisco pressure transmitter model APT45-SP-1C.**

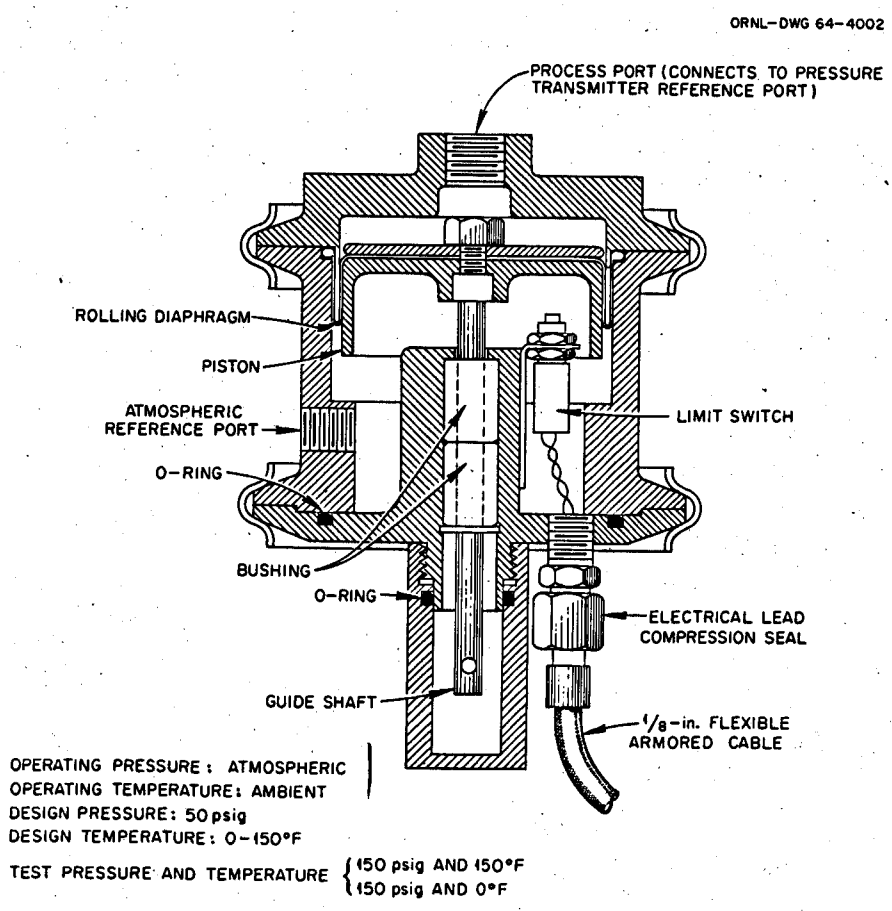


**Fig. 6.2.1 Pressure transmitter expansion chamber assembly.**


Fig. 6.3.1. Weld-sealed differential pressure transmitters.

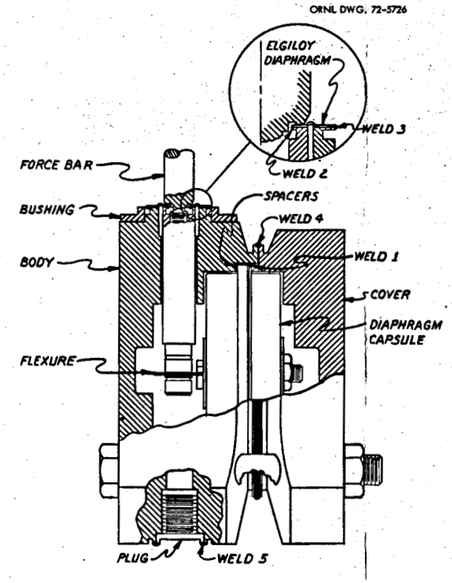


Fig. 6.3.2. Weld-sealed differential pressure transmitter, body assembly.

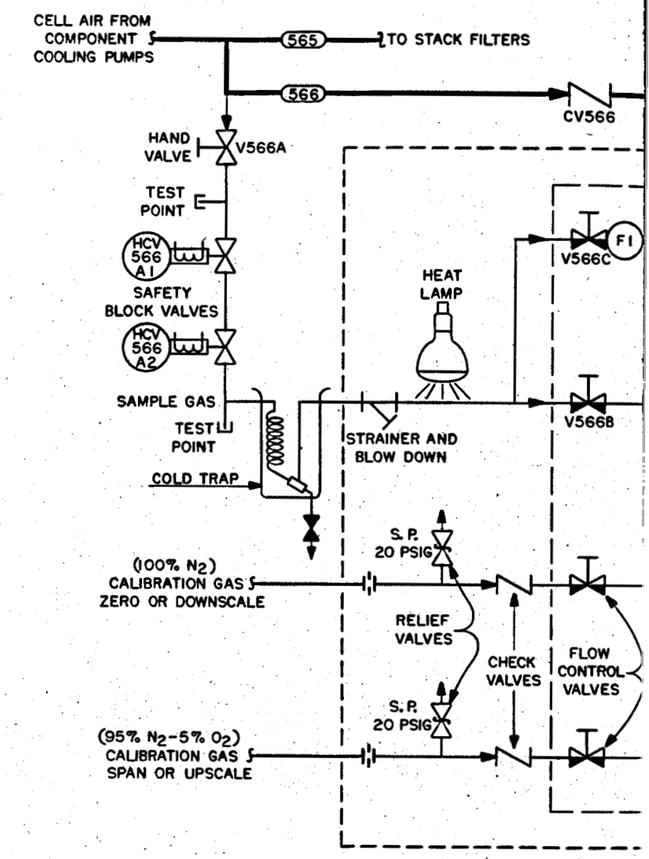


Fig. 6.4.1. MSRE cell a

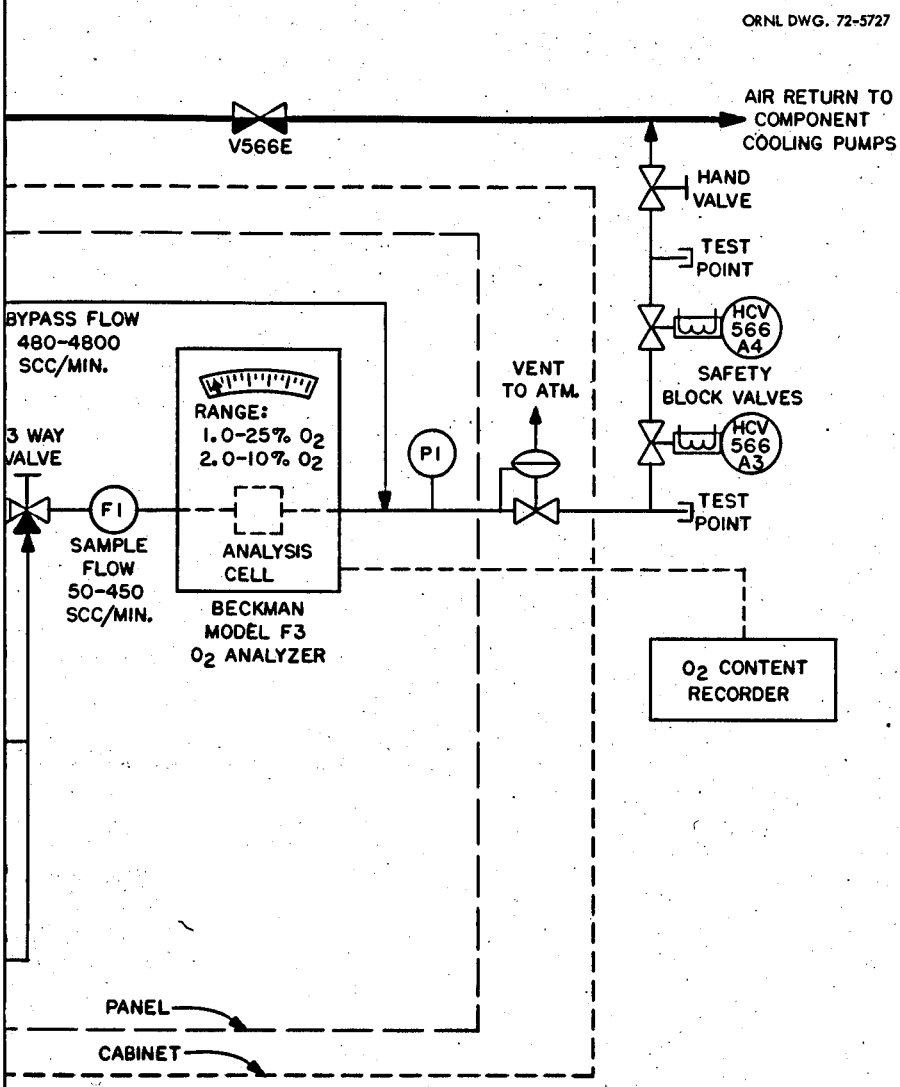


tmosphere oxygen analyzer system.

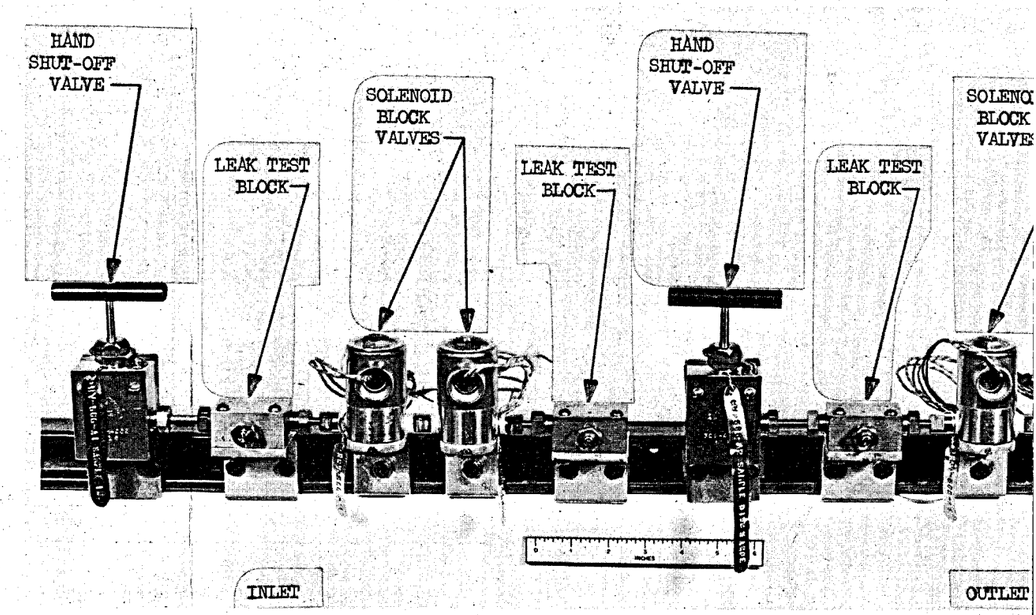


Fig. 6.4.2. Reactor cell oxygen analyzer – inlet and discharge line assembly.

PHOTO 72556

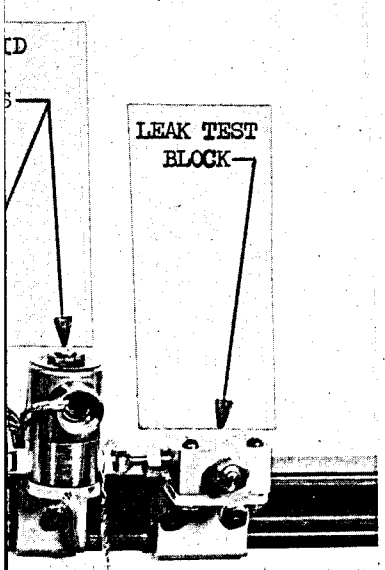


PHOTO 72554

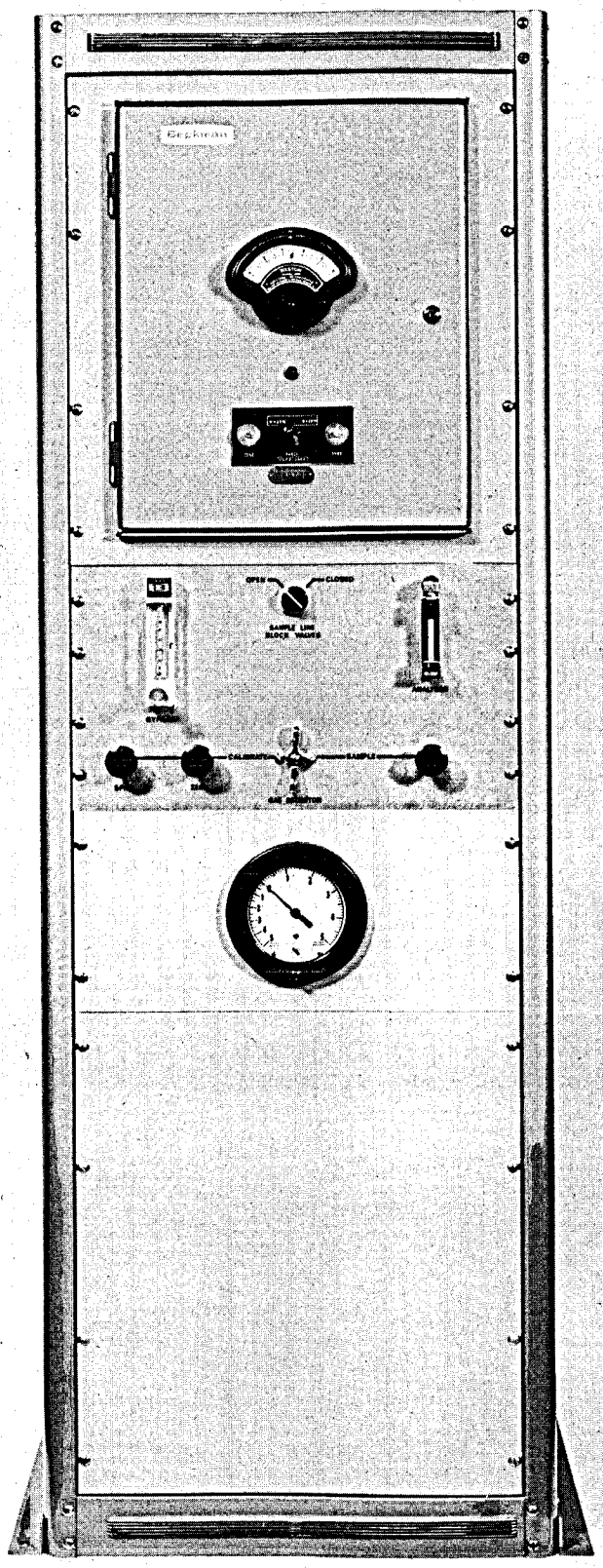

Fig. 6.4.3 Reactor cell oxygen analyzer cabinet – front view.

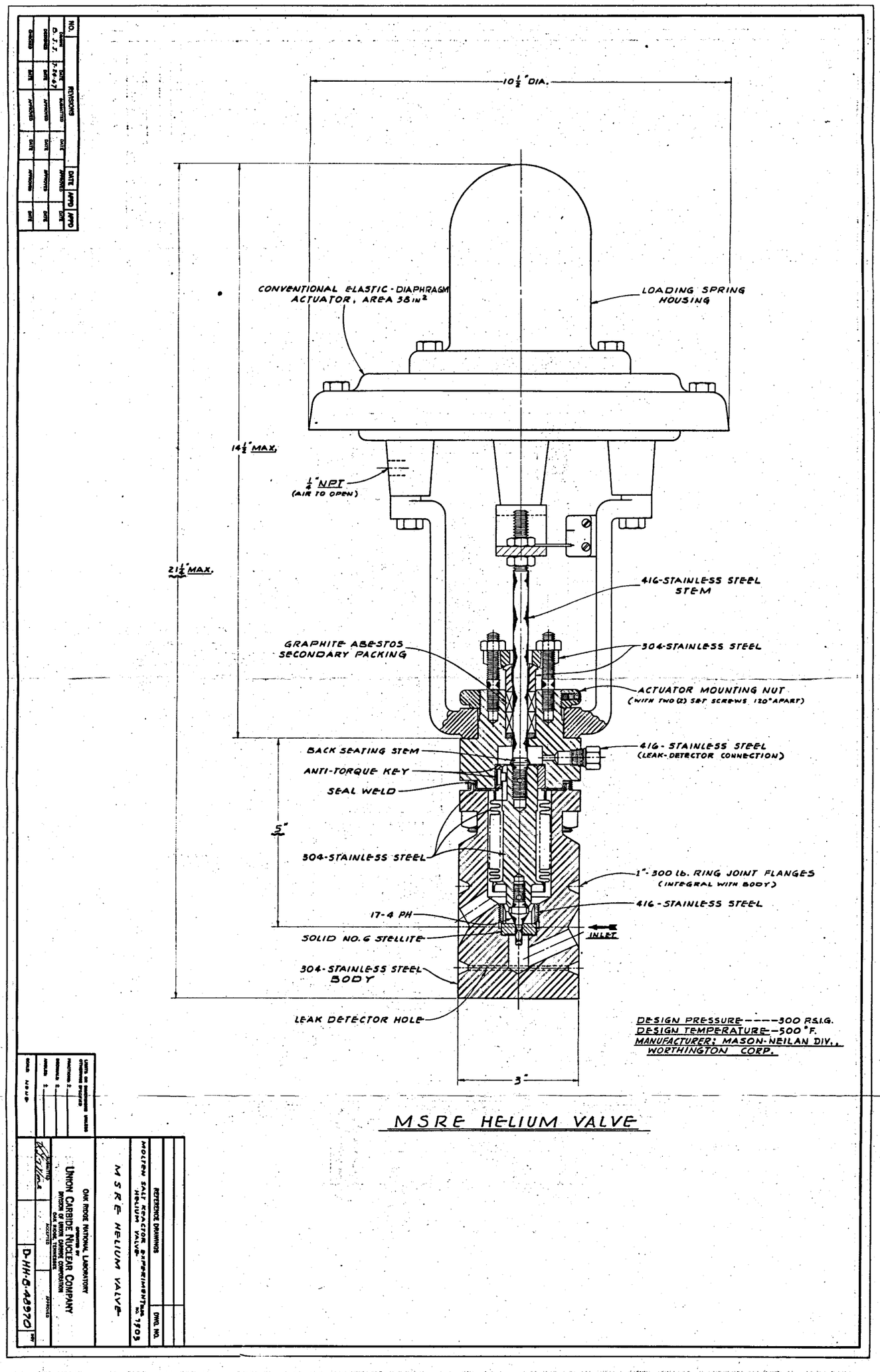


Fig. 6.5.1. MSRE helium valve.

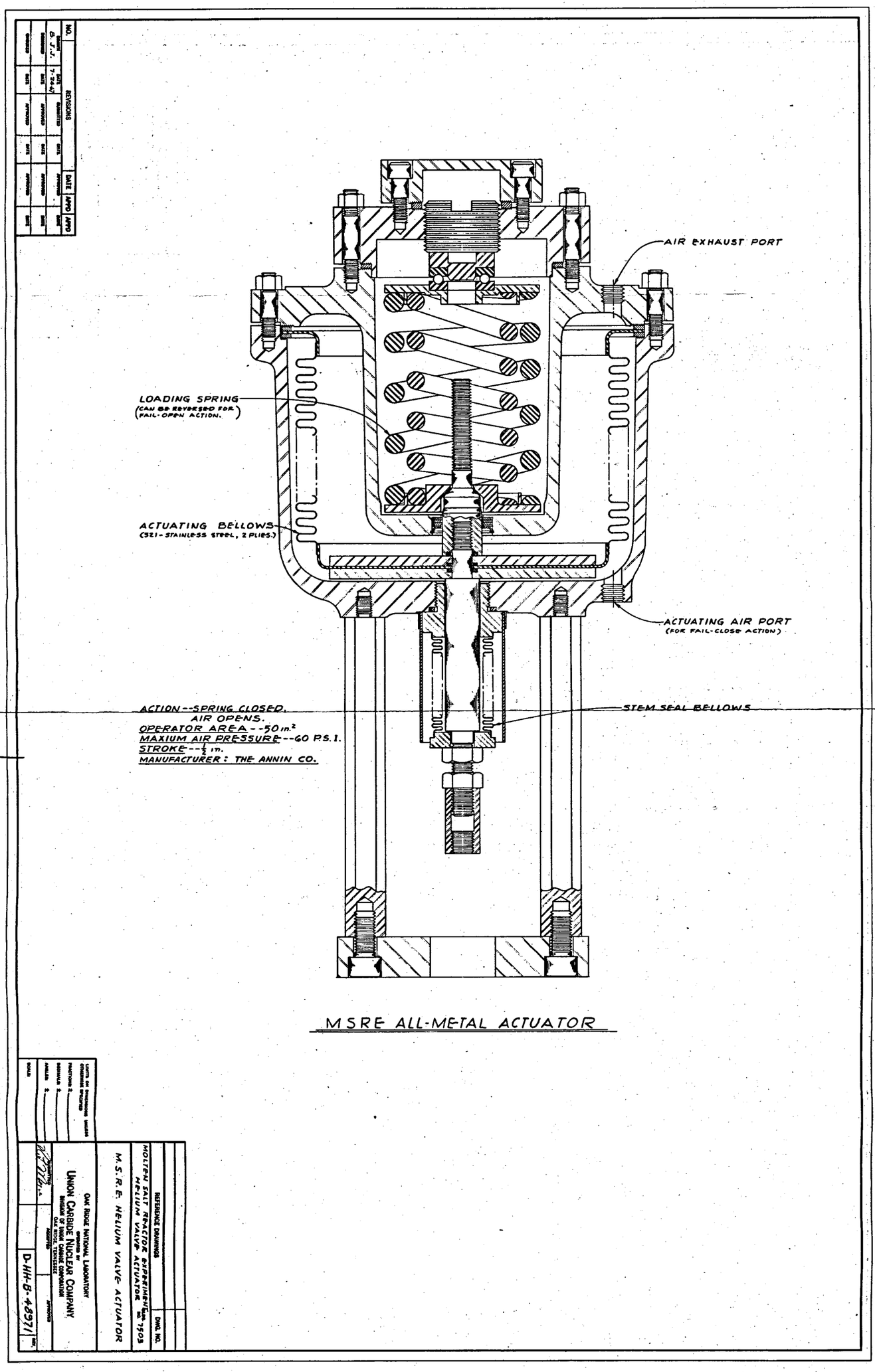


Fig. 6.5.2. MSRE all-metal actuator.

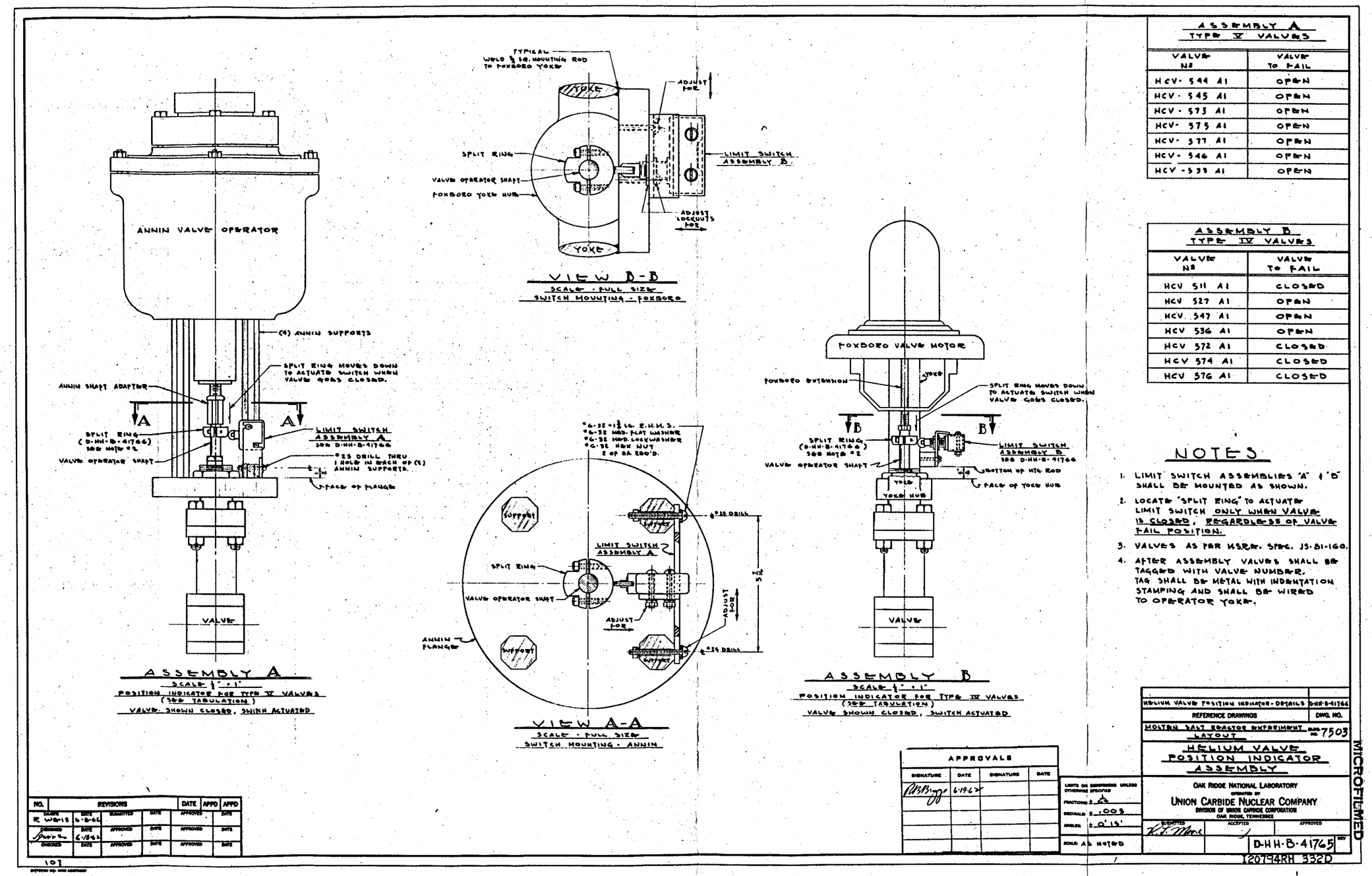


Fig. 6.5.3. Helium valve position indicator assembly.

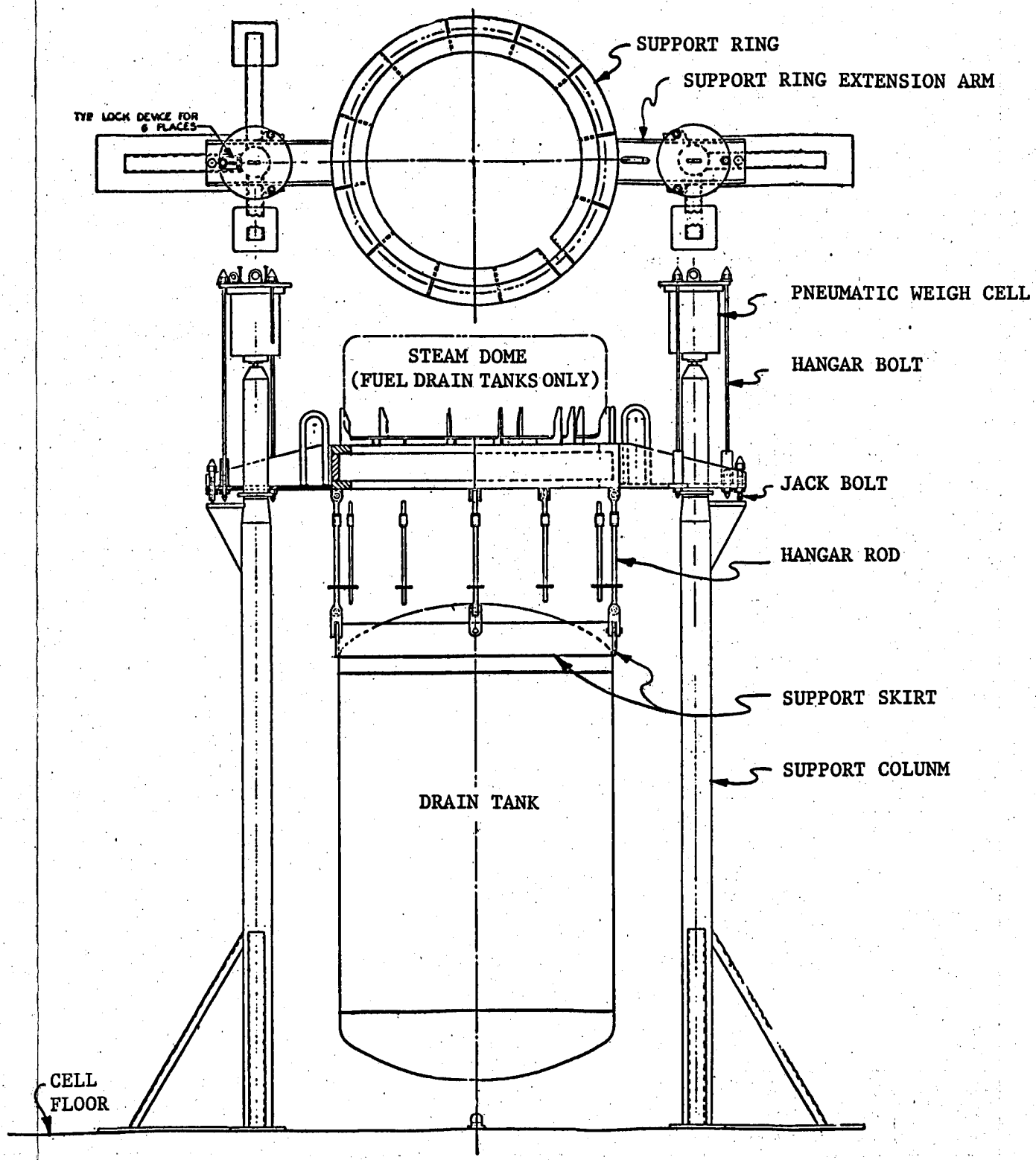


Fig. 6.6.1. Typical MSRE tank support and weigh cell installation.

ORNL-LR-DWG 6874

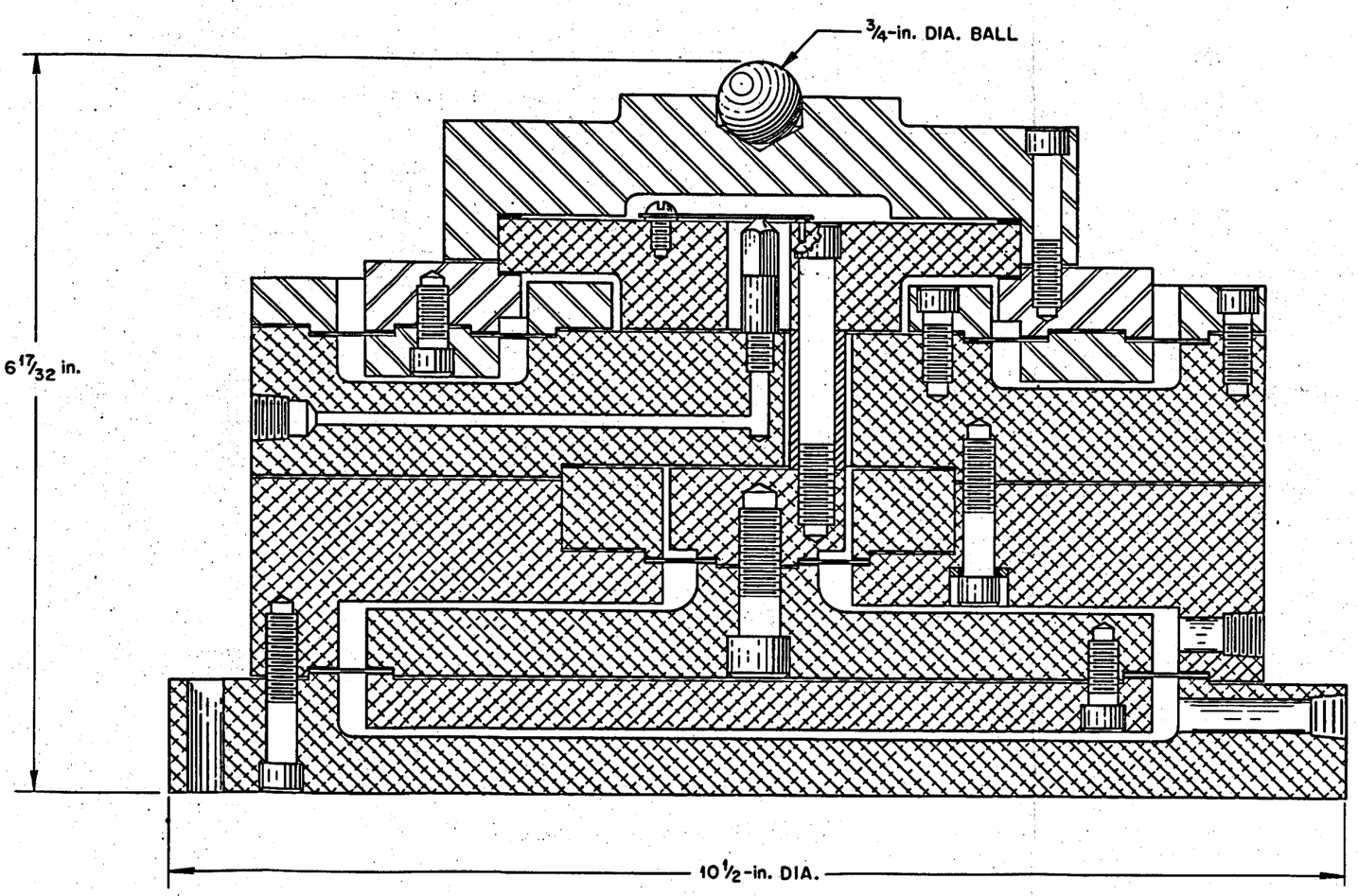


Fig. 6.6.2. Basic pneumatic weigh cell construction.

ORNL DWG. 72-5728

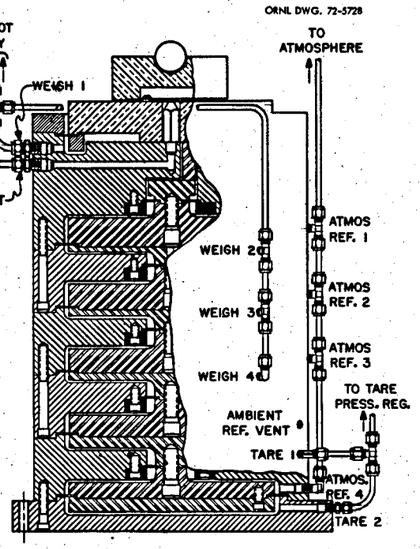


Fig. 6.6.3. Fuel drain tank weigh cell.

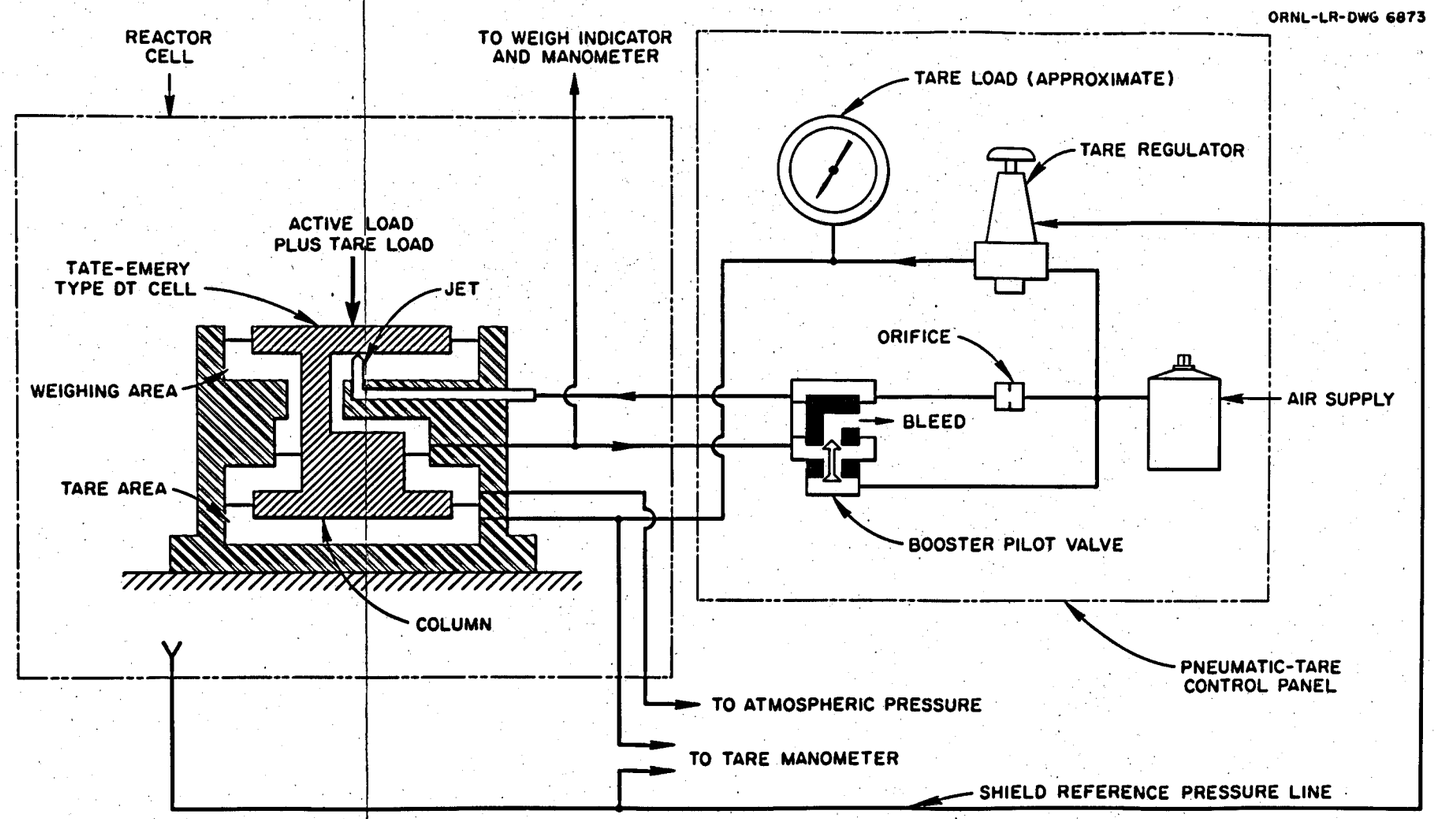


Fig. 6.6.4. Schematic diagram, basic weigh cell system.

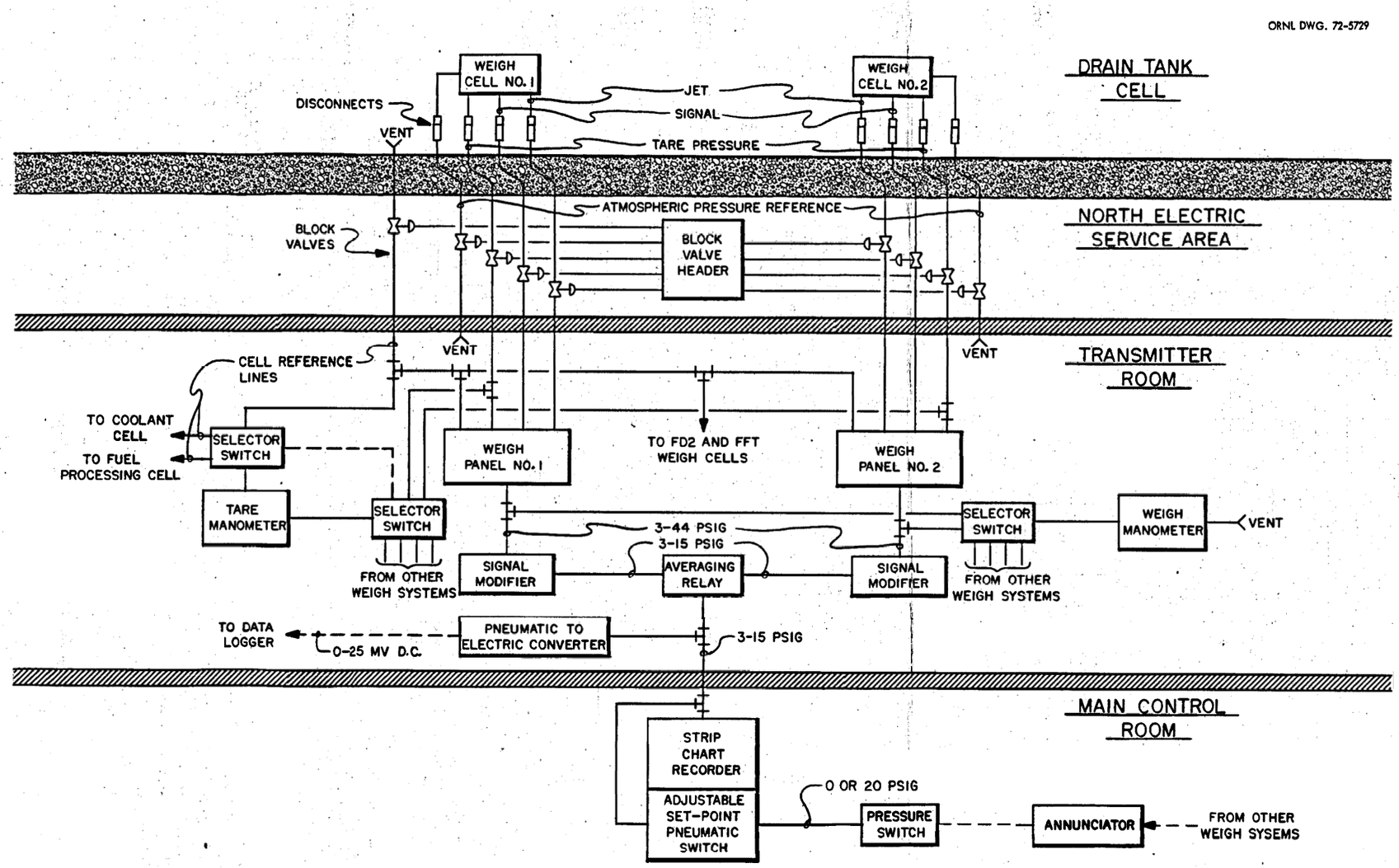


Fig. 6.6.5. MSRE weigh system, block diagram.

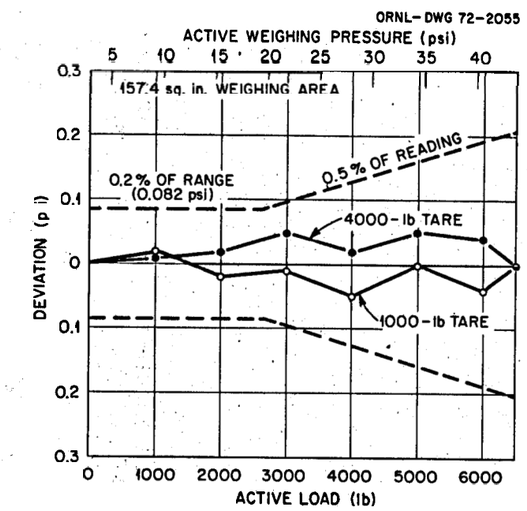


Fig. 6.6.6. Summary of performance – linearity of weighing pressure.

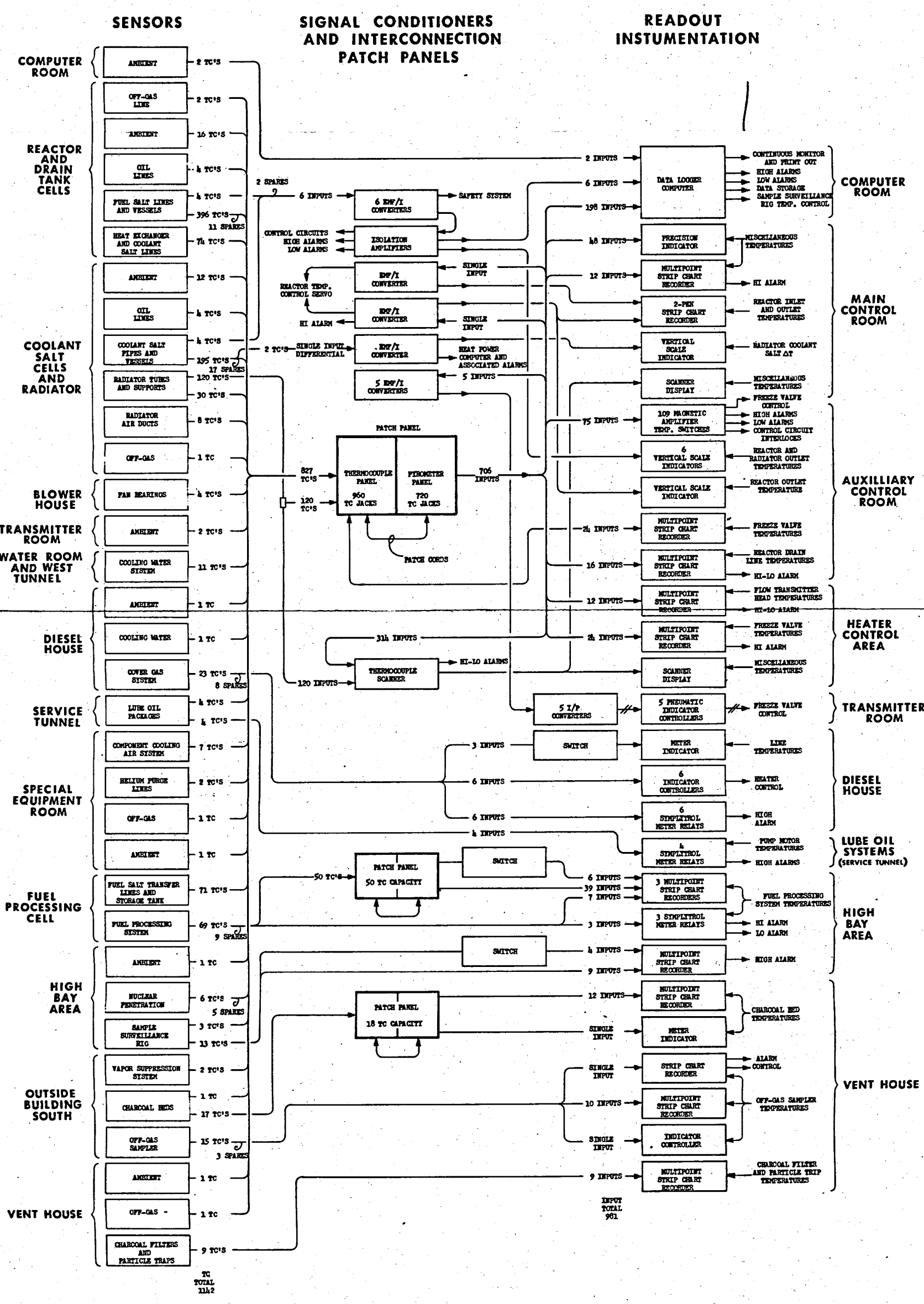


Fig. 6.7.1. Block diagram of MSRE temperature measuring system.

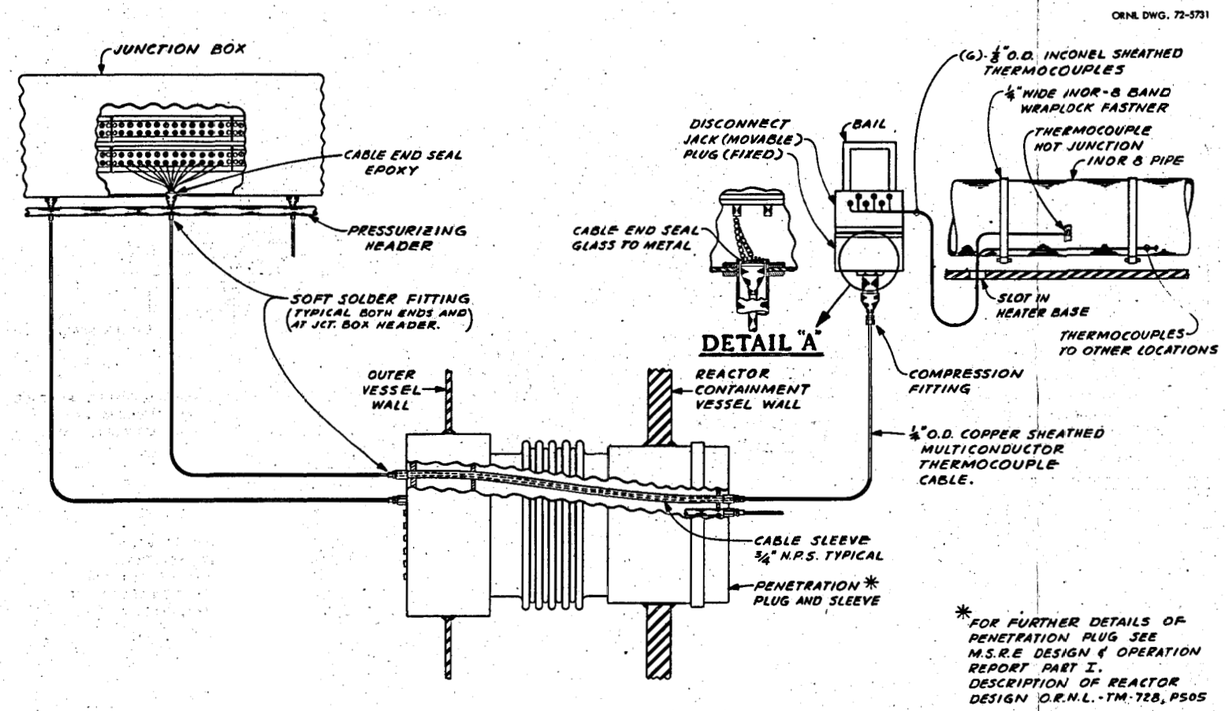


Fig. 6.7.2. Typical fuel salt system pipe-mounted thermocouple installation.

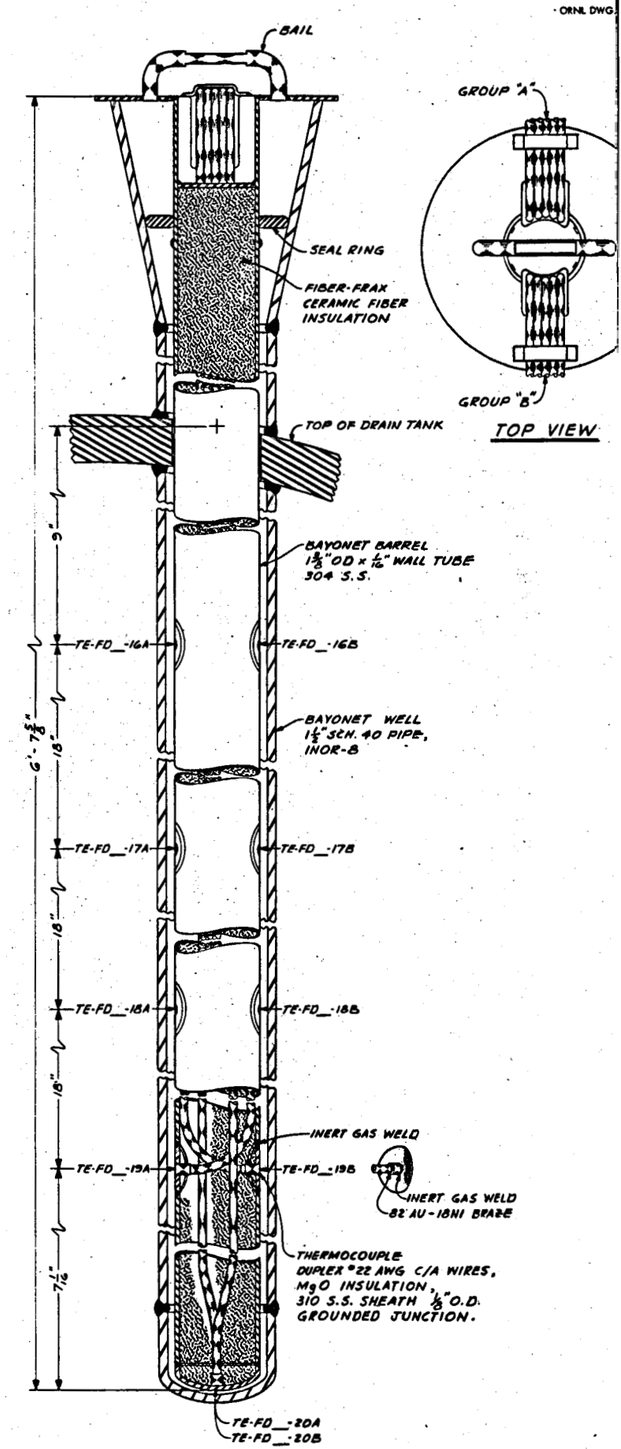


Fig. 6.7.3. Drain tank bayonet thermocouple assembly.

72-5732

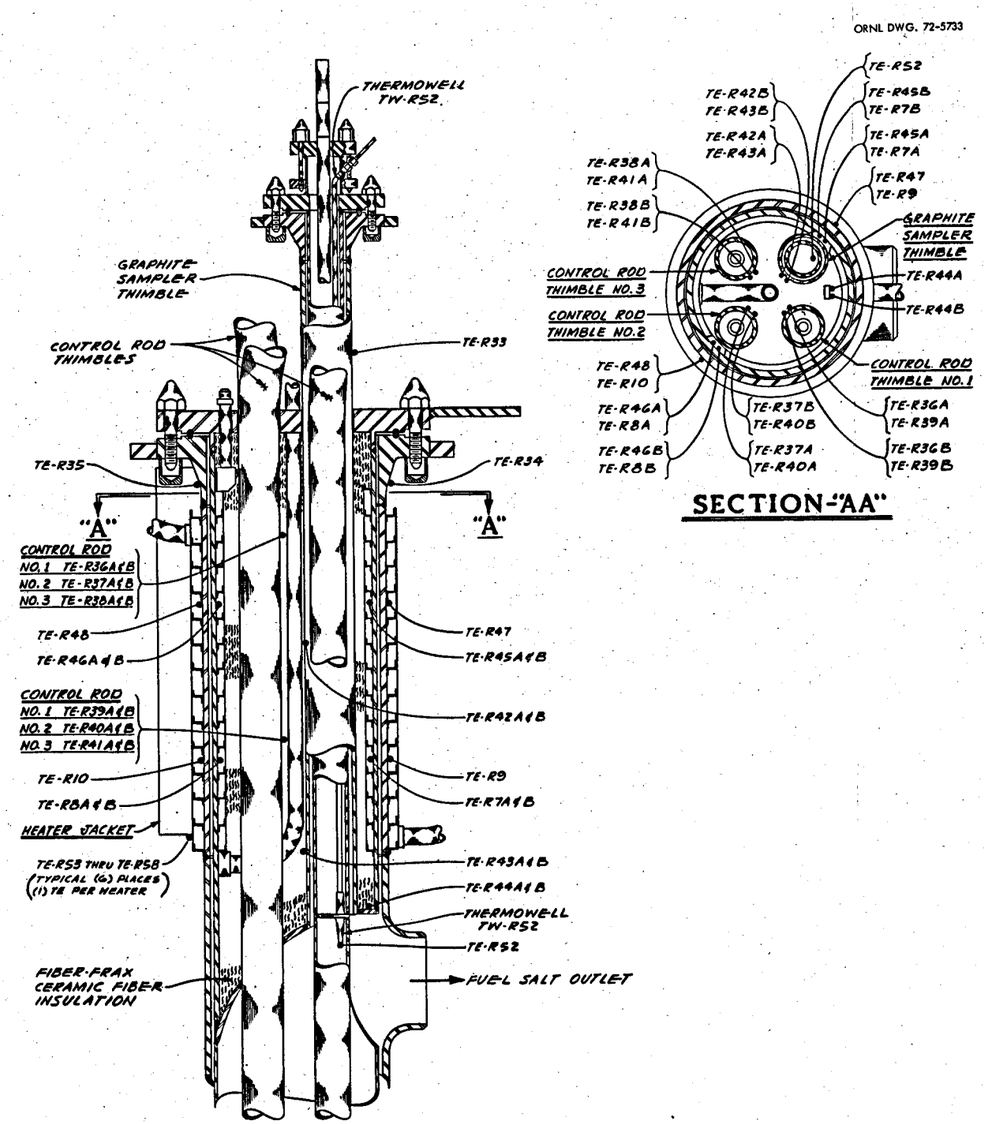


Fig. 6.7.4. Reactor access nozzle thermocouple locations.

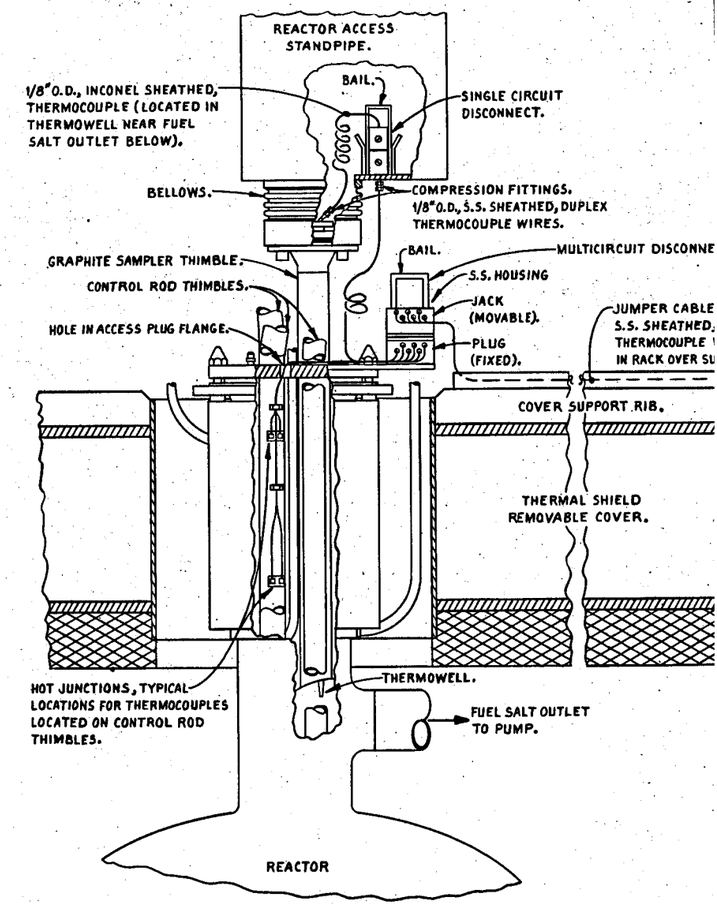


Fig. 6.7

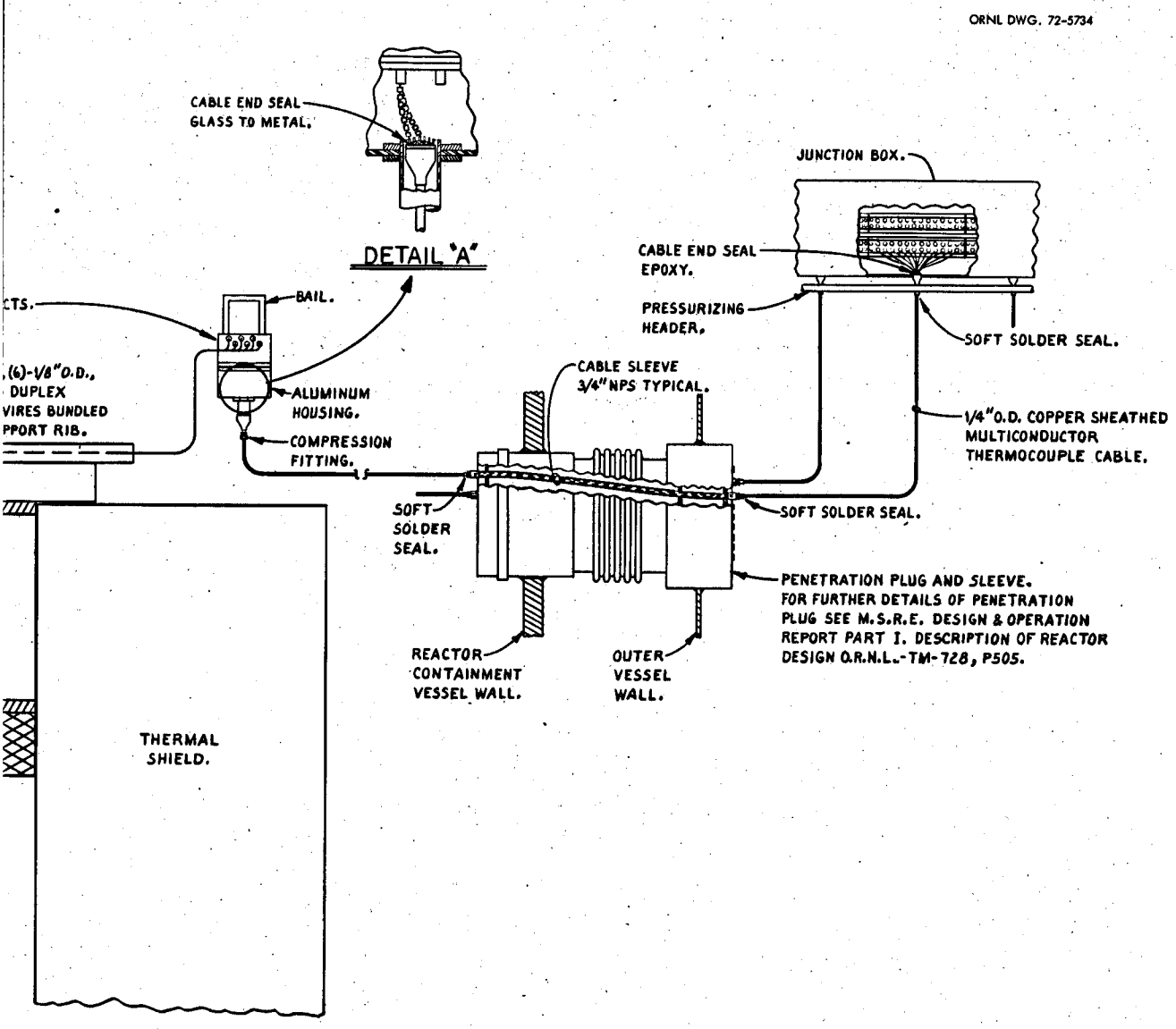


5. Typical routing of a reactor access nozzle thermocouple.

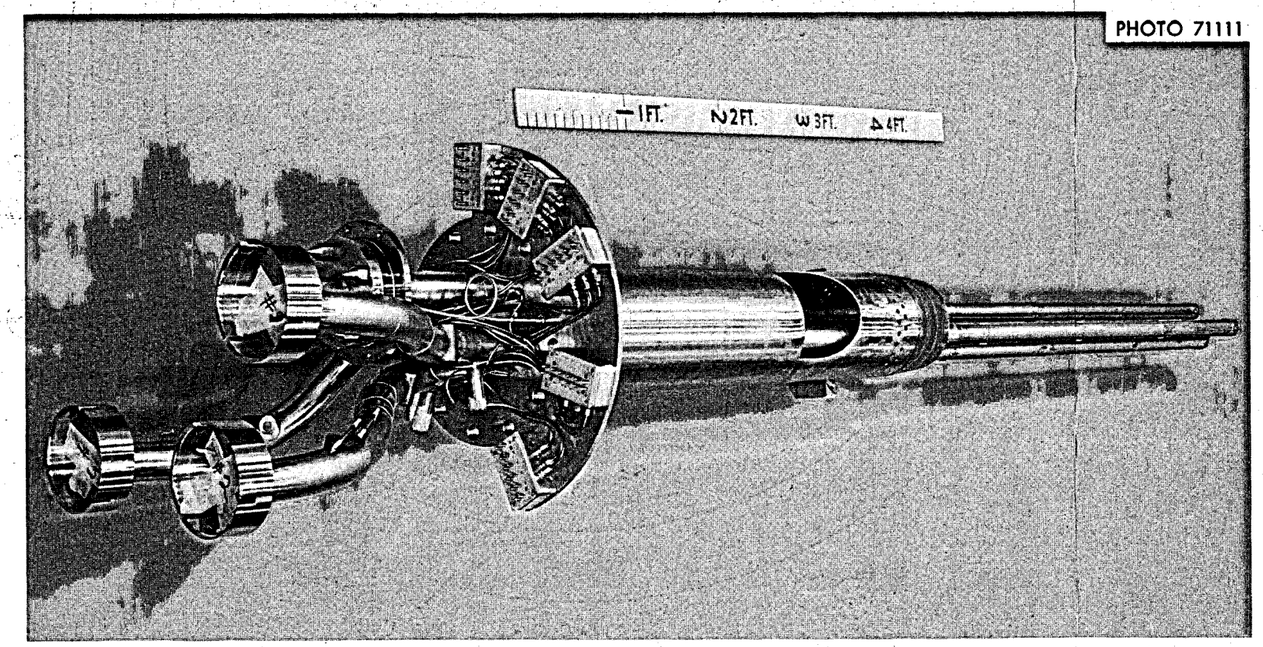


Fig. 6.7.6. Reactor access nozzle assembly.

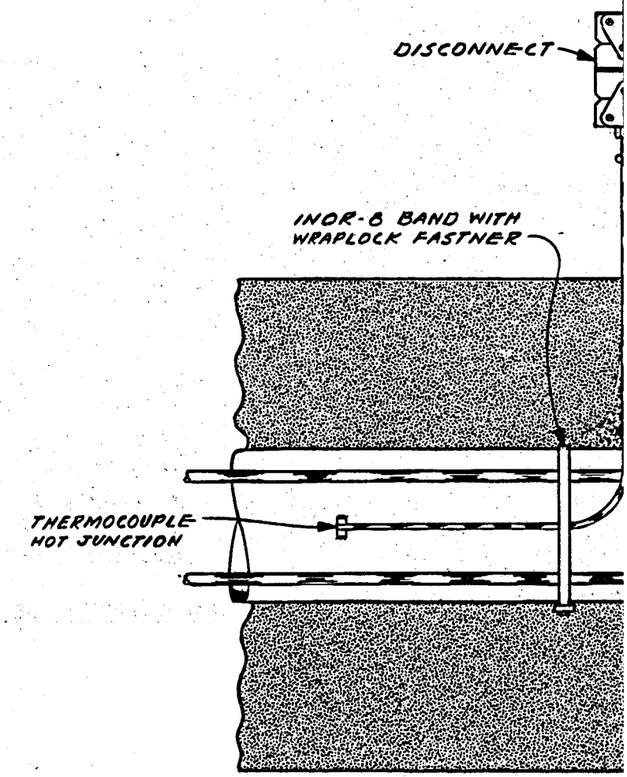


Fig. 6.7.7. Typical

ORNL DWG. 72-5735

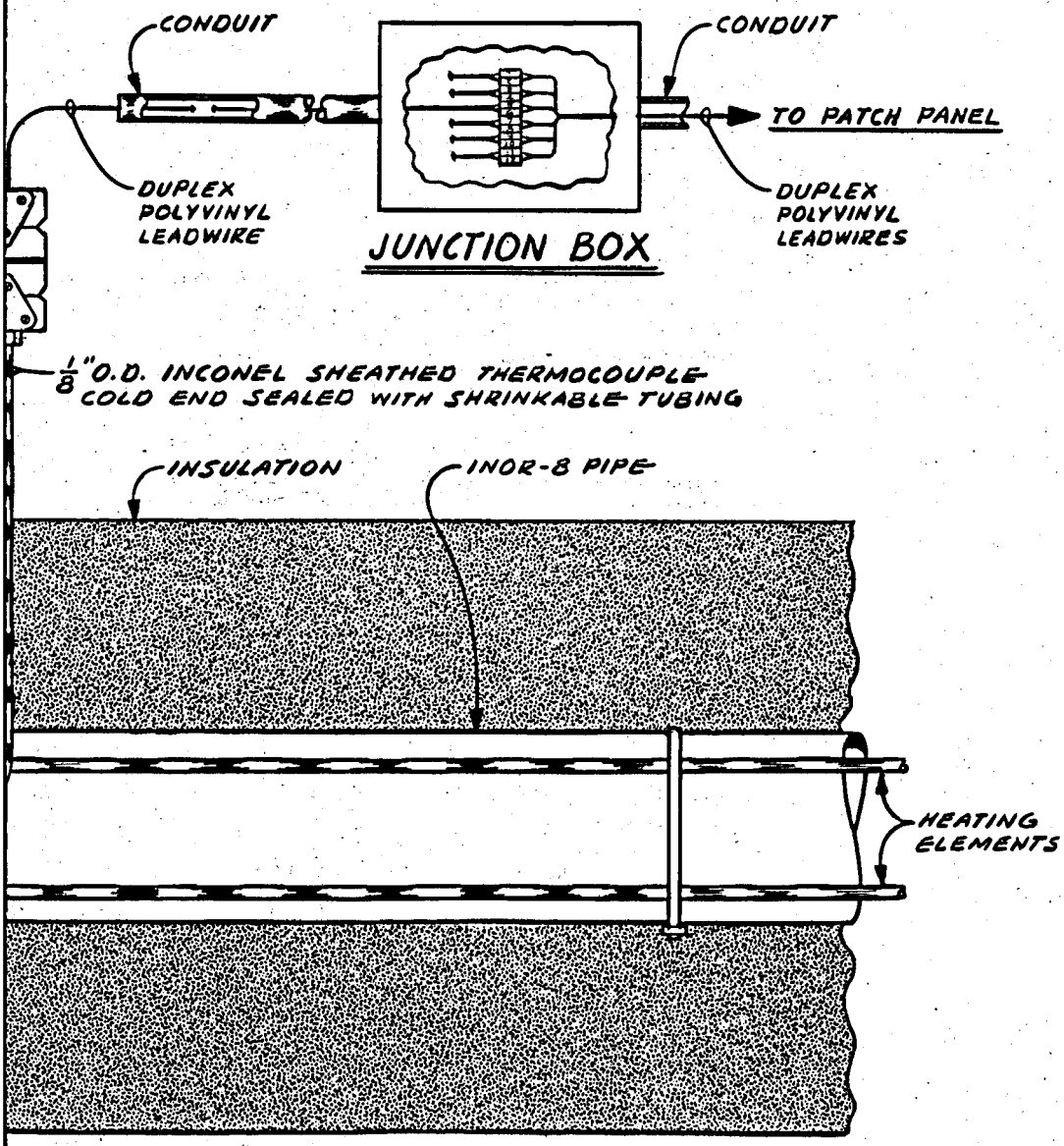


oolant salt system pipe-mounted thermocouple installation.

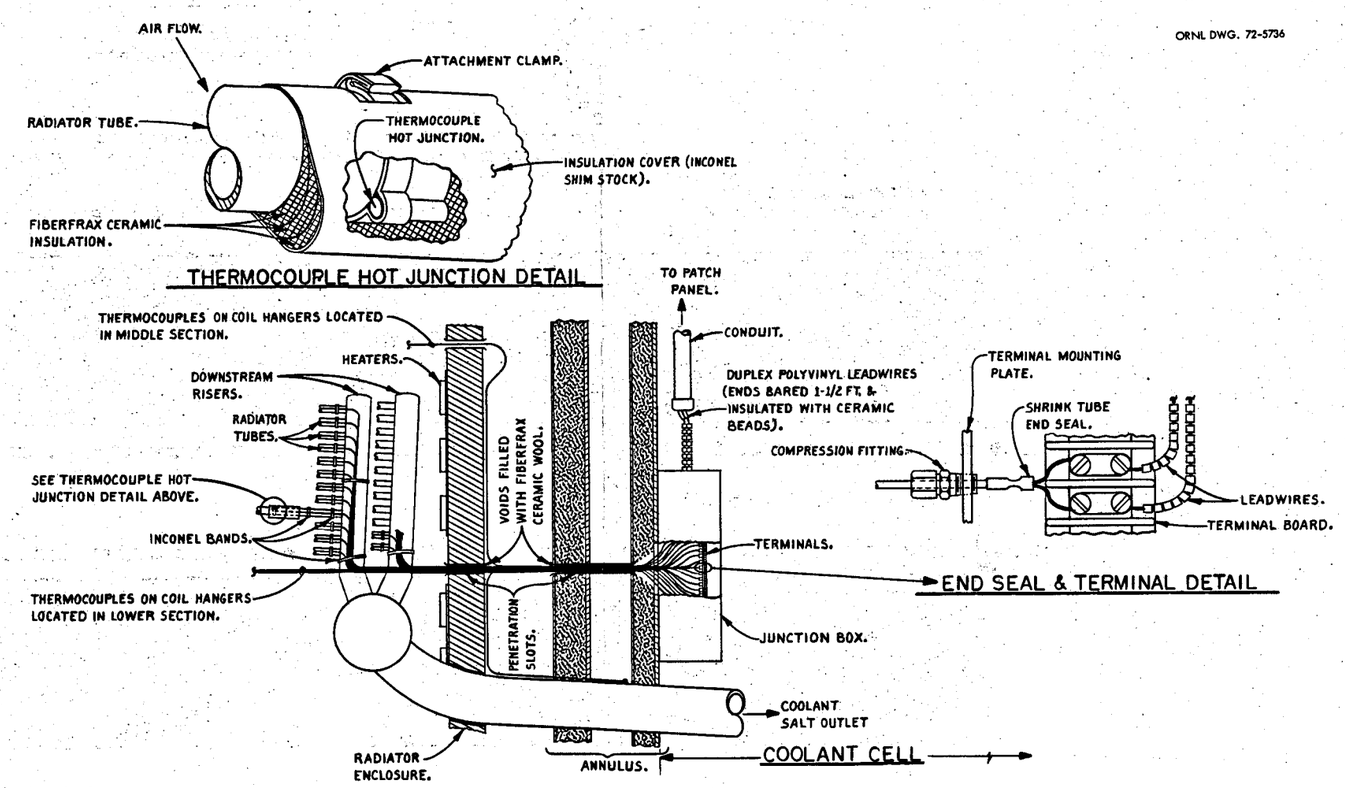


Fig. 6.7.8. Typical radiator tube thermocouple installation.

ORNL DWG. 72-5738

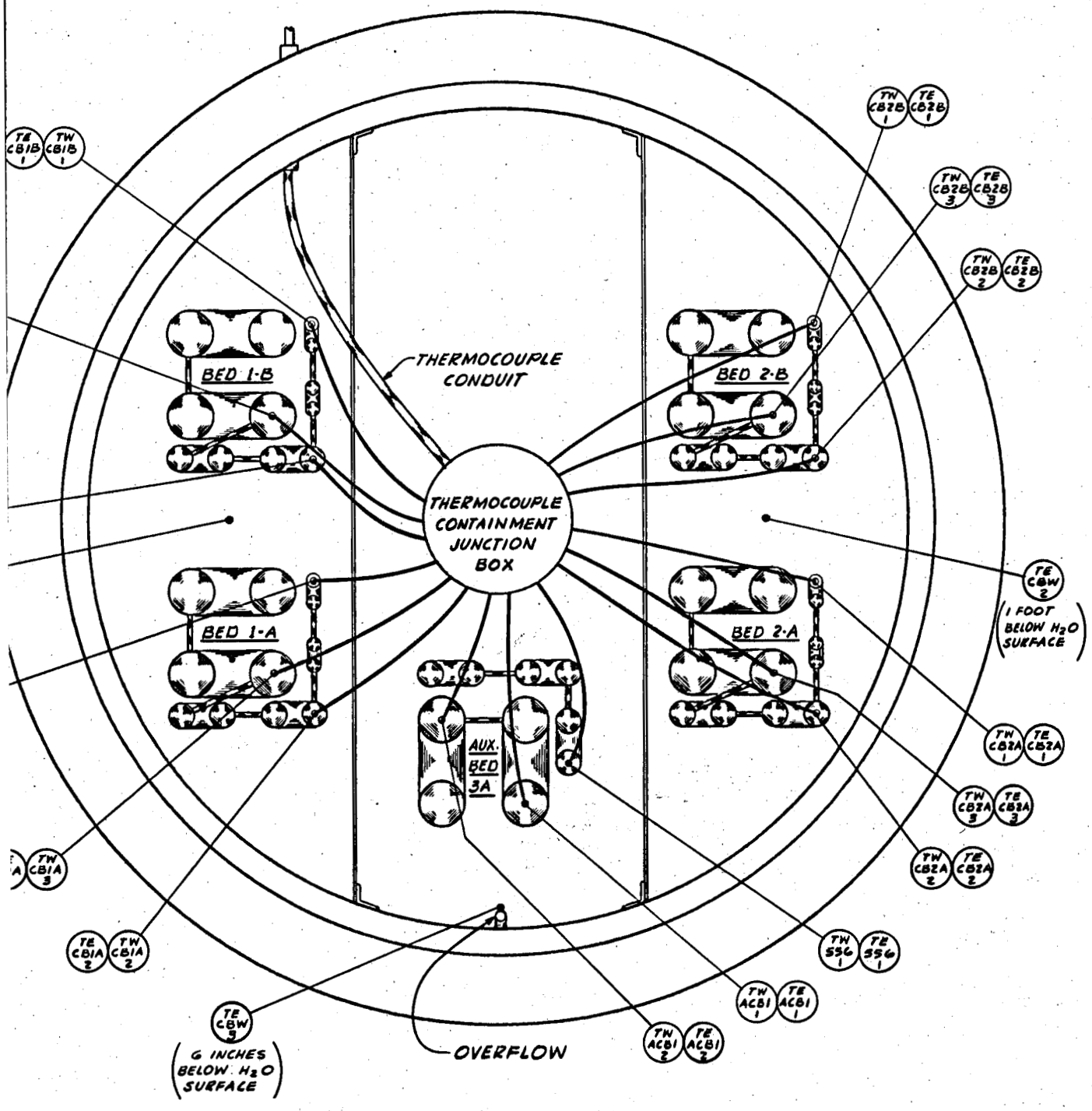


Fig. 6.7.9. Location and routing of charcoal bed thermocouples – plan view.

ORNL DWG. 72-5737

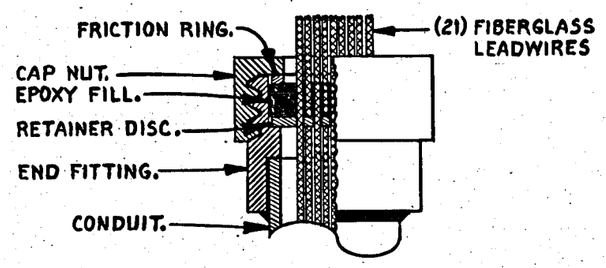


END SEAL DETAIL

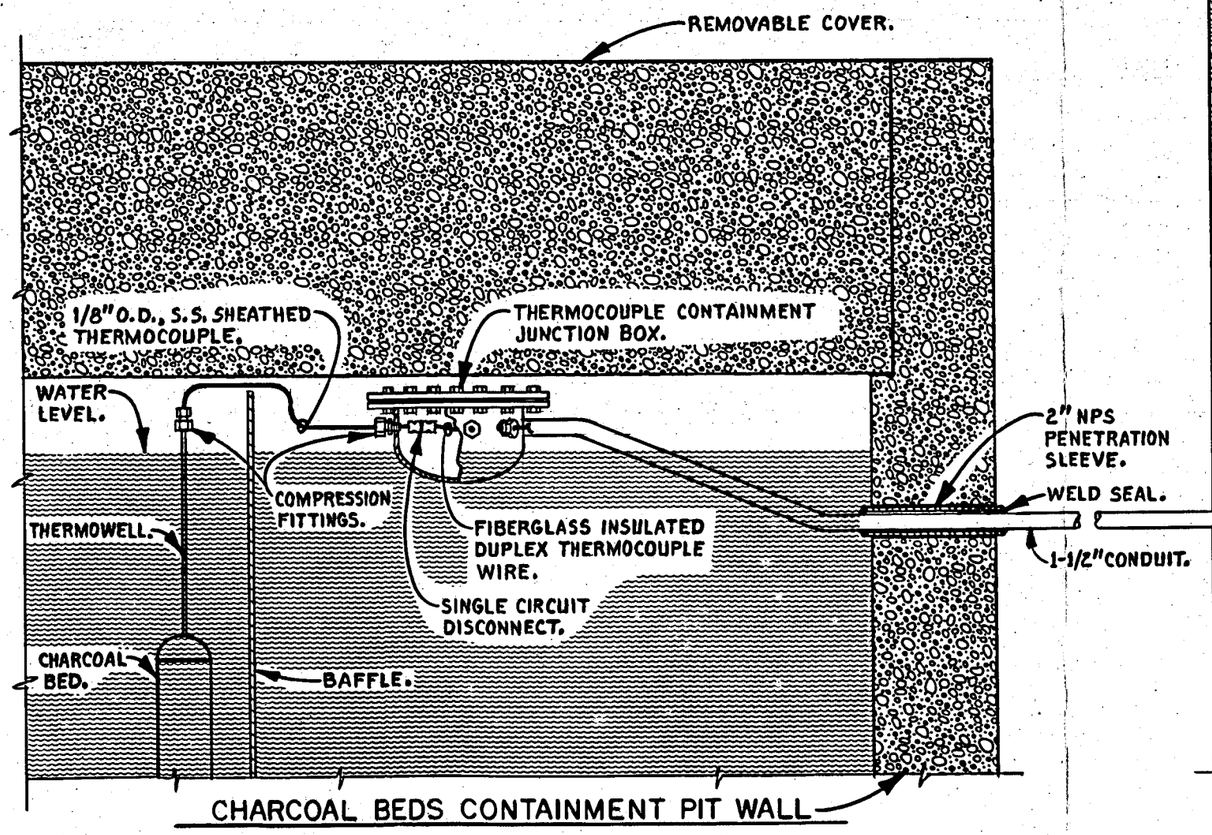


CHARCOAL BEDS CONTAINMENT PIT WALL

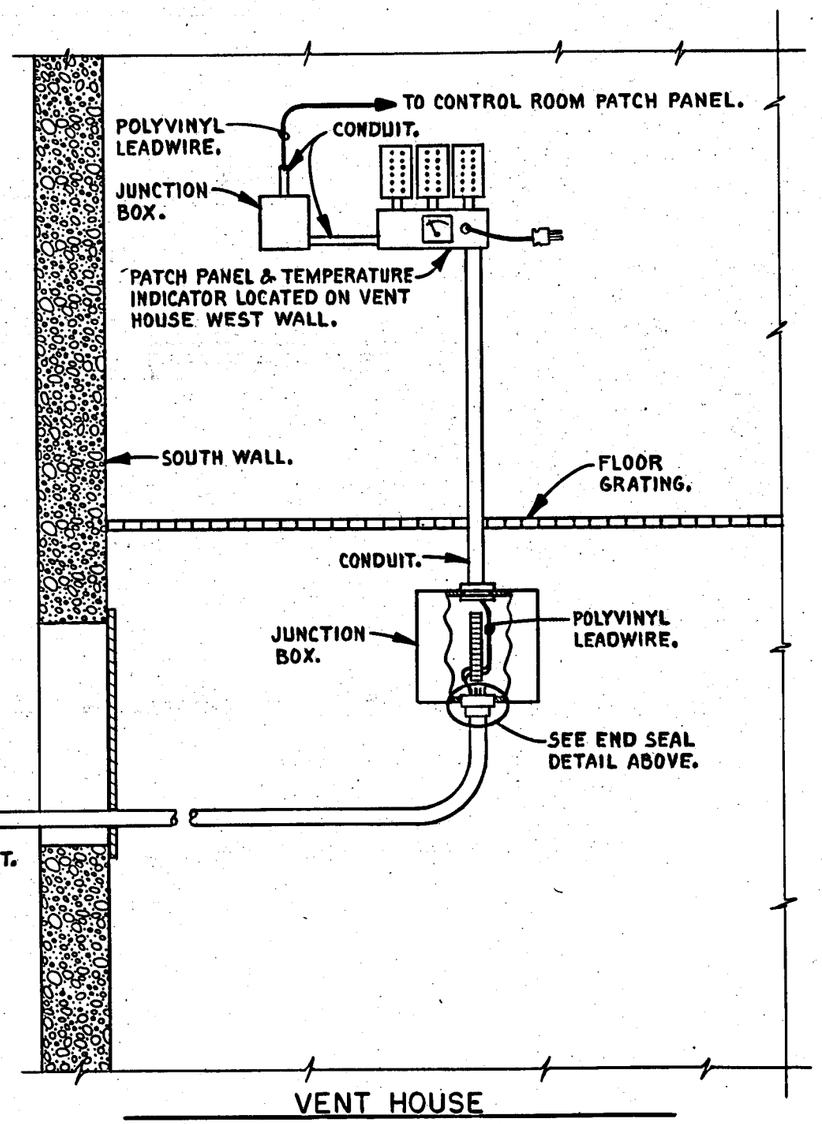


VENT HOUSE

Fig. 6.7.10. Typical routing of charcoal bed thermocouples – elevation.

ORNL DWG. 72-5739

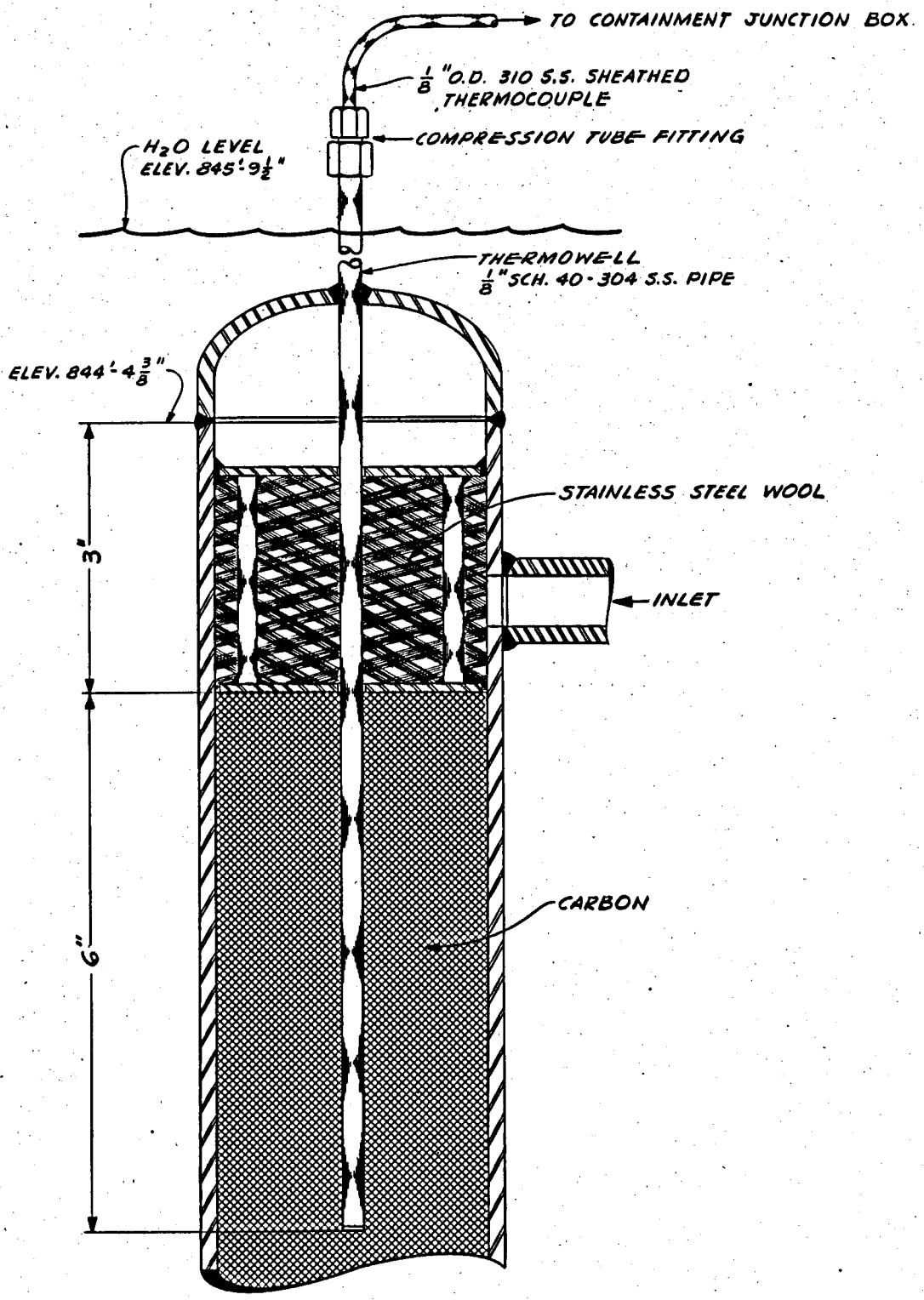


Fig. 6.7.11. Typical charcoal bed thermocouple installation.

ORNL DWG. 72-5740

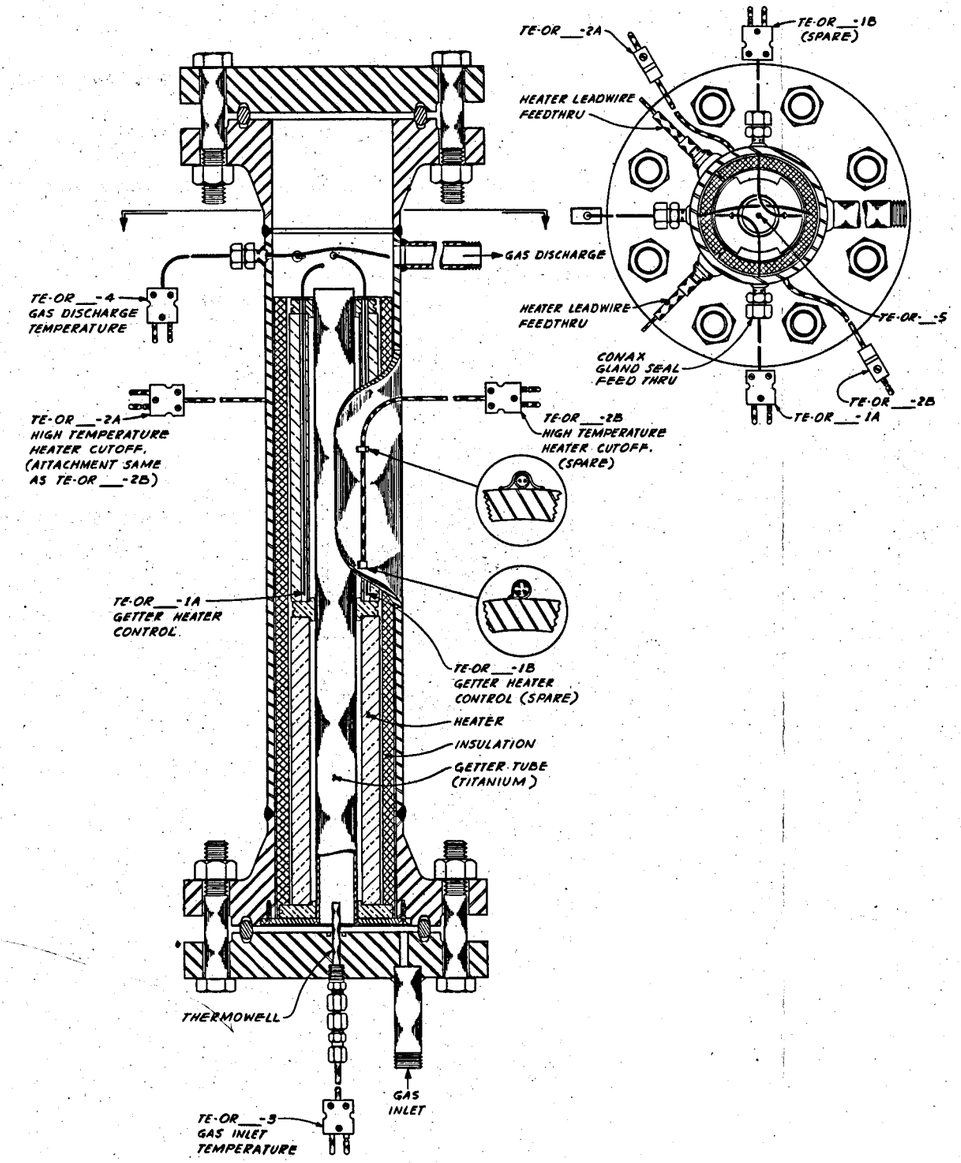


Fig. 6.7.12. Oxygen removal unit thermocouple installation.

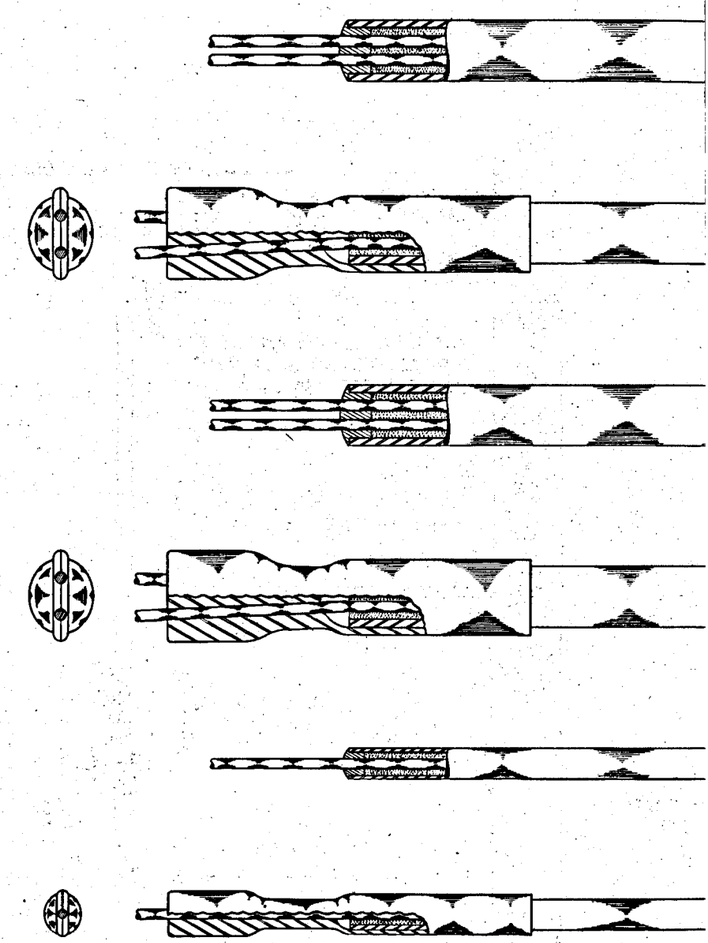

Fig

ORNL DWG. 72-5741

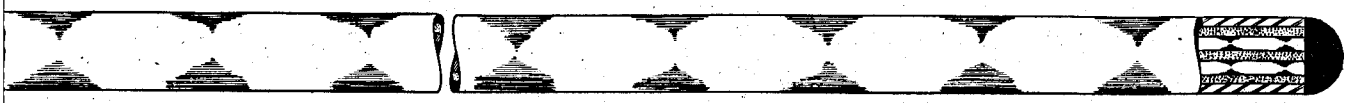

DUPLEX, GROUNDED JUNCTION, PSC 0900 END SEAL

DUPLEX, GROUNDED JUNCTION, SHRINK TUBE END SEAL

DUPLEX, INSULATED JUNCTION, PSC 0900 END SEAL

DUPLEX, INSULATED JUNCTION, SHRINK TUBE END SEAL

SINGLEWIRE, PSC 0900 END SEAL

SINGLEWIRE, SHRINK TUBE END SEAL

**6.7.13. Basic sheathed thermocouple assemblies.**

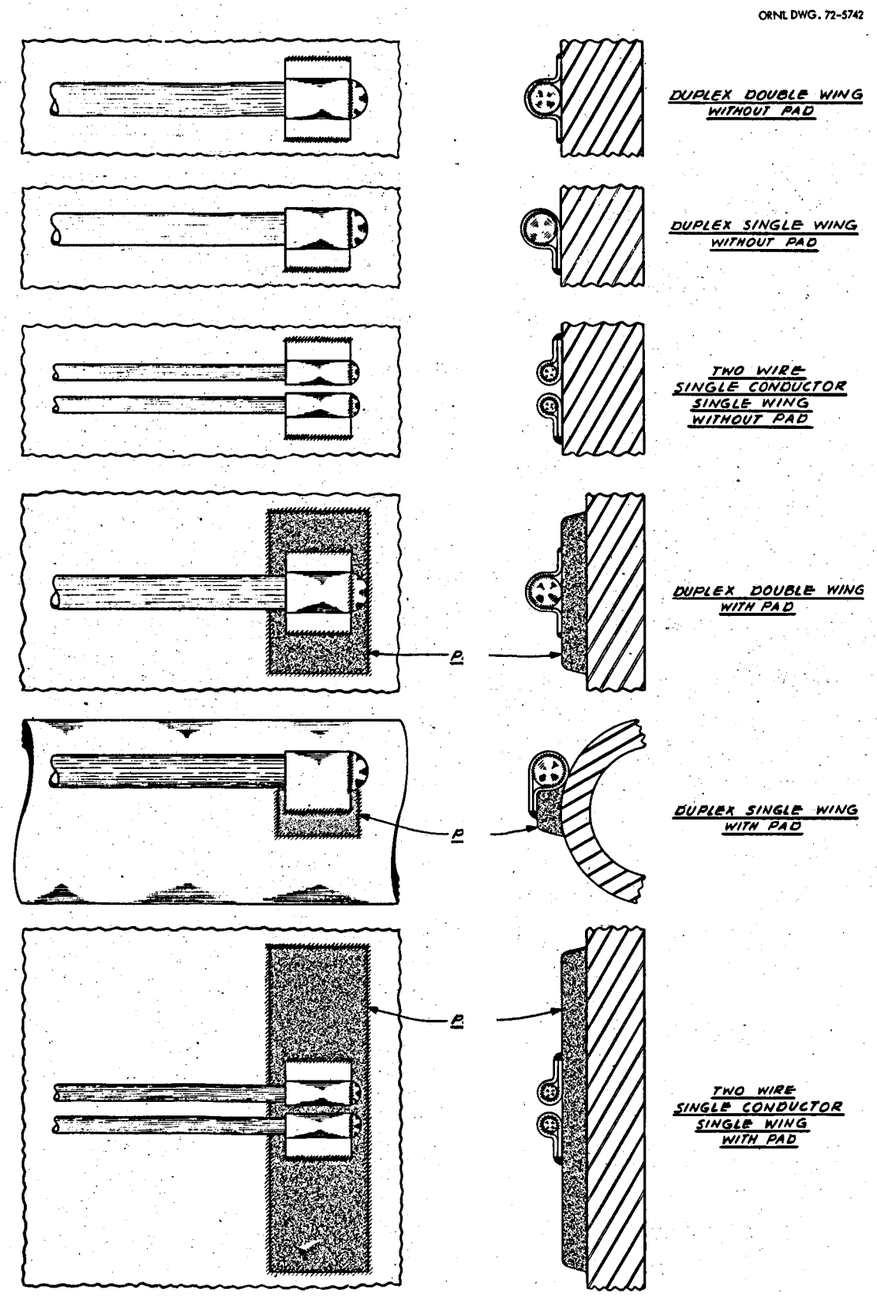


Fig. 6.7.14. Typical thermoco weld attachments.

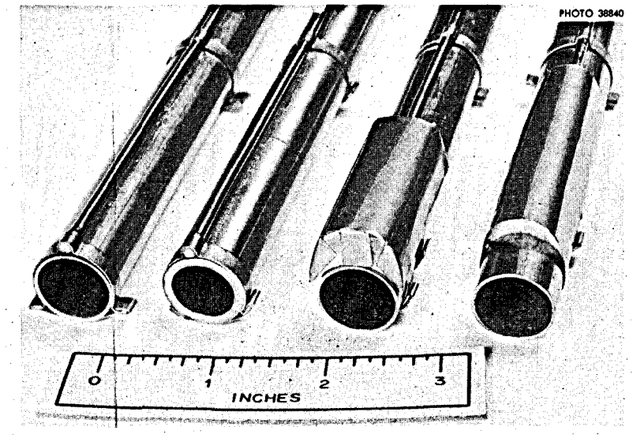


Fig. 6.7.15. Radiator tube thermocouple attachments.

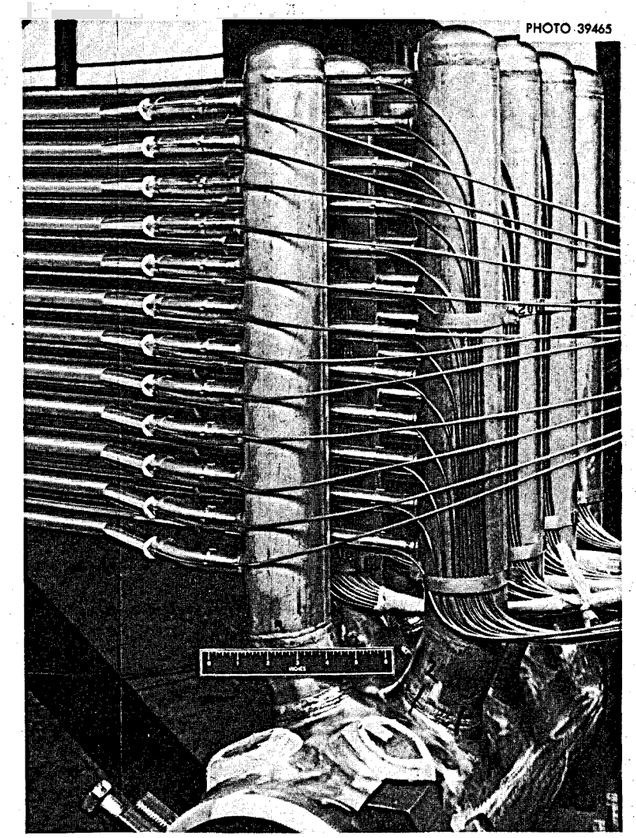


Fig. 6.7.16. Radiator tube thermocouple installation.

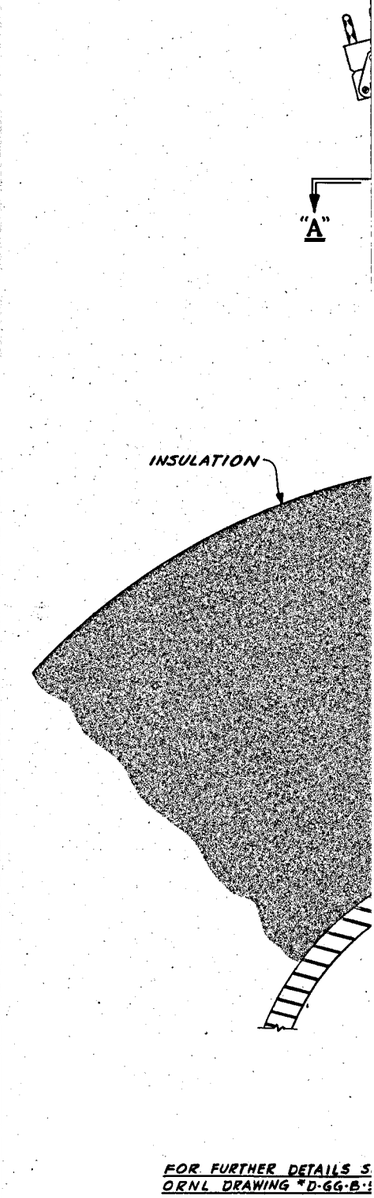


Fig. 6

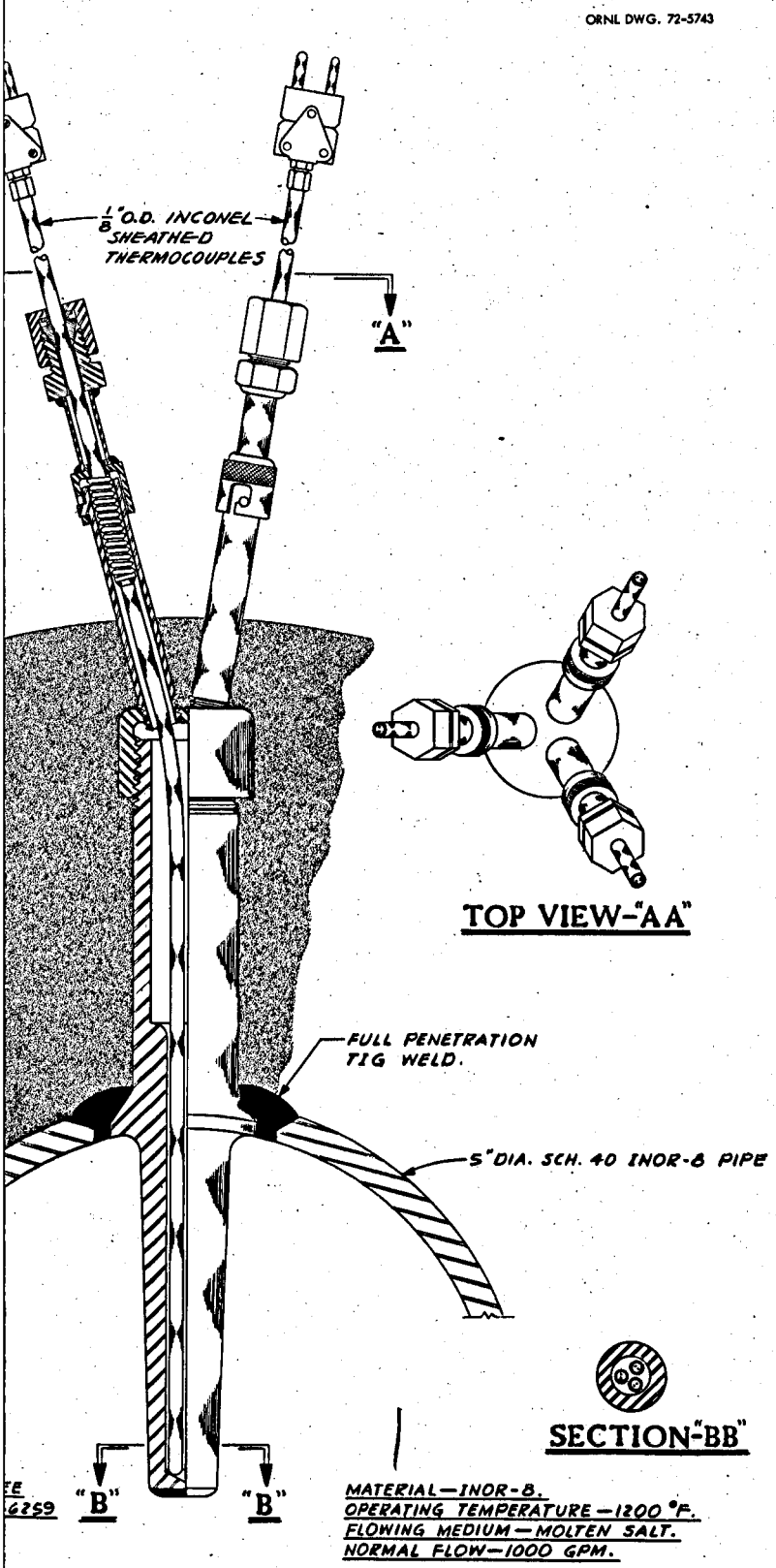


.7.17. Coolant salt system thermowell.

PHOTO 38838

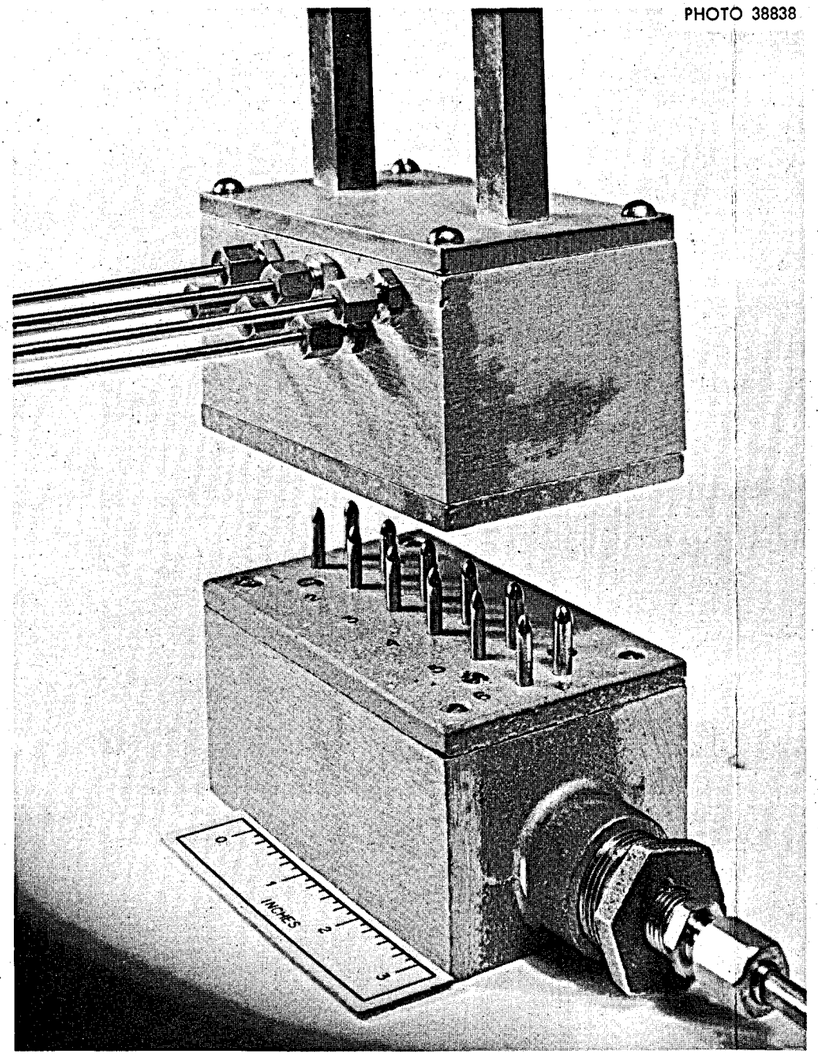


Fig. 6.7.18. Radiation-resistant multicircuit remotely operable thermocouple disconnect.

PHC

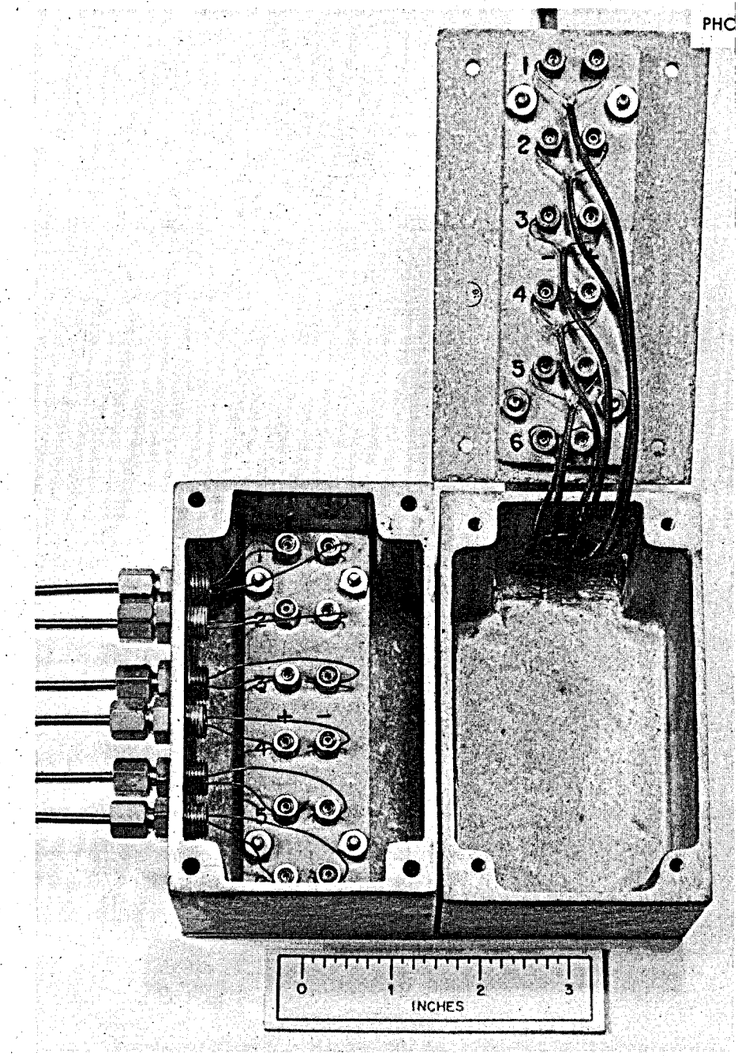


Fig. 6.7.19. Internal wiring, thermocouple disconnect.

3

TO 38837

ORNL DWG. 72-5744

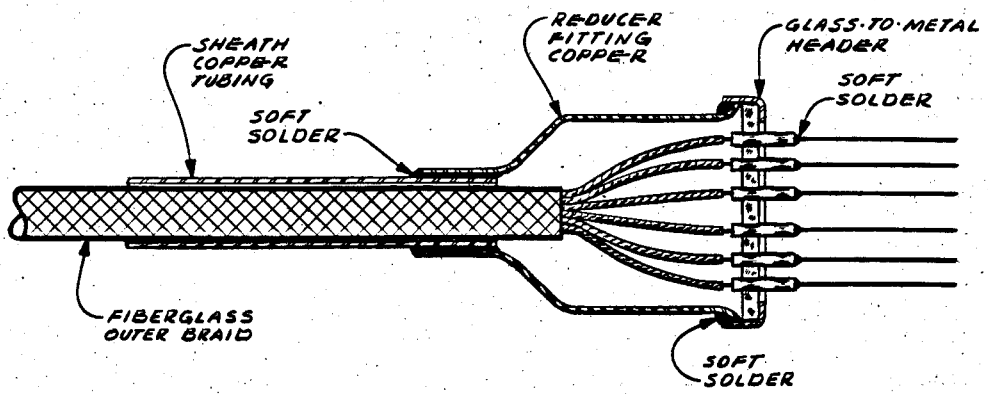


Fig. 6.7.20. Multiconductor thermocouple cable, glass-to-metal end seal.

ORNL DWG. 72-5745

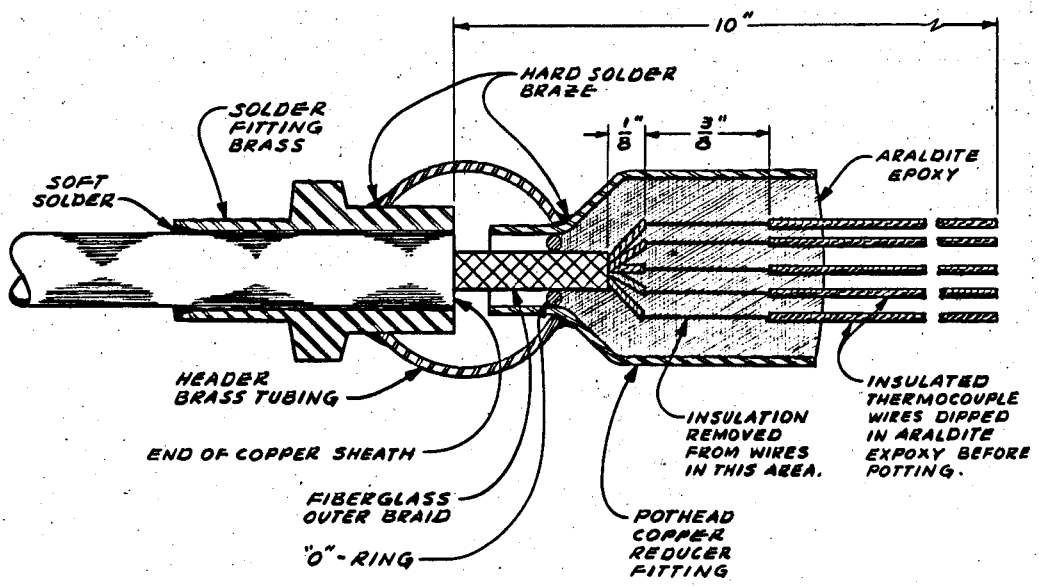


Fig. 6.7.21*A*. Multiconductor thermocouple cable, epoxy end seal and header assembly.

ORNL DWG. 72-5746

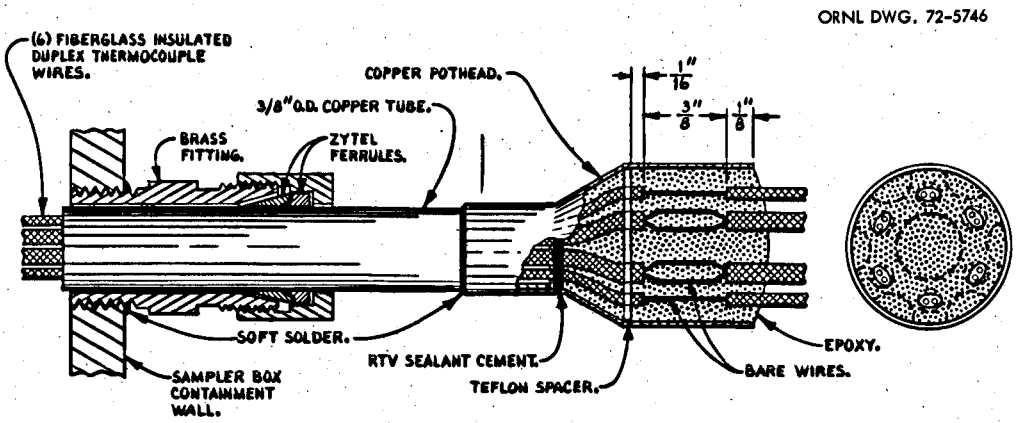


Fig. 6.7.21*B*. Typical off-gas sampler thermocouple lead-wire penetration.

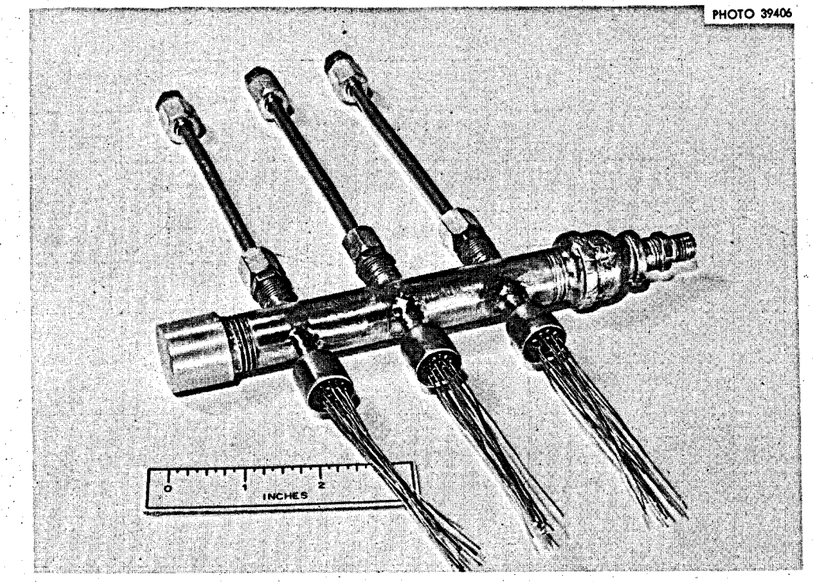


Fig. 6.7.22. Multiconductor thermocouple cable, epoxy end seal and header assembly.

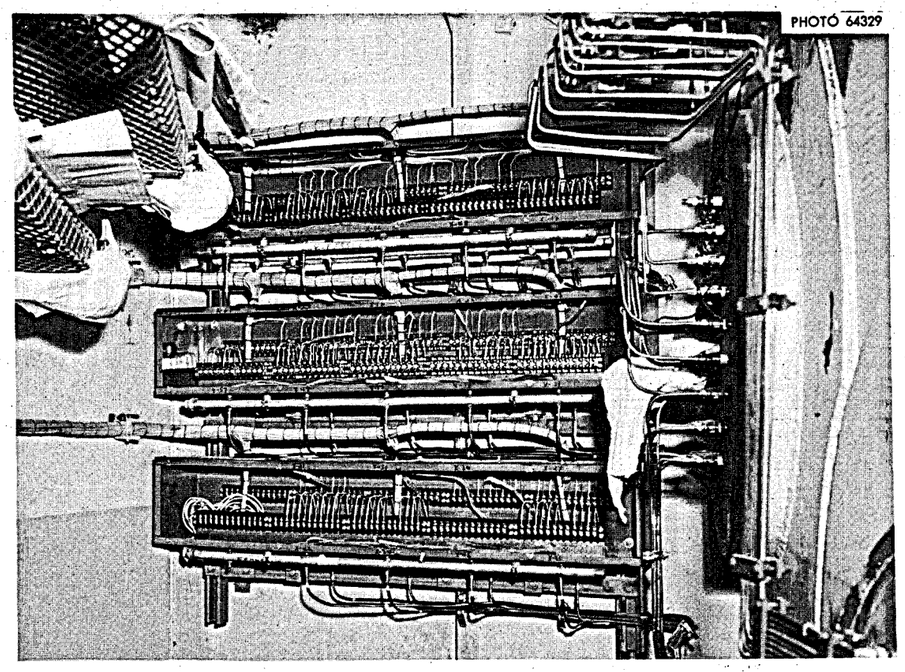


Fig. 6.7.23. Reactor cell thermocouple junction box.

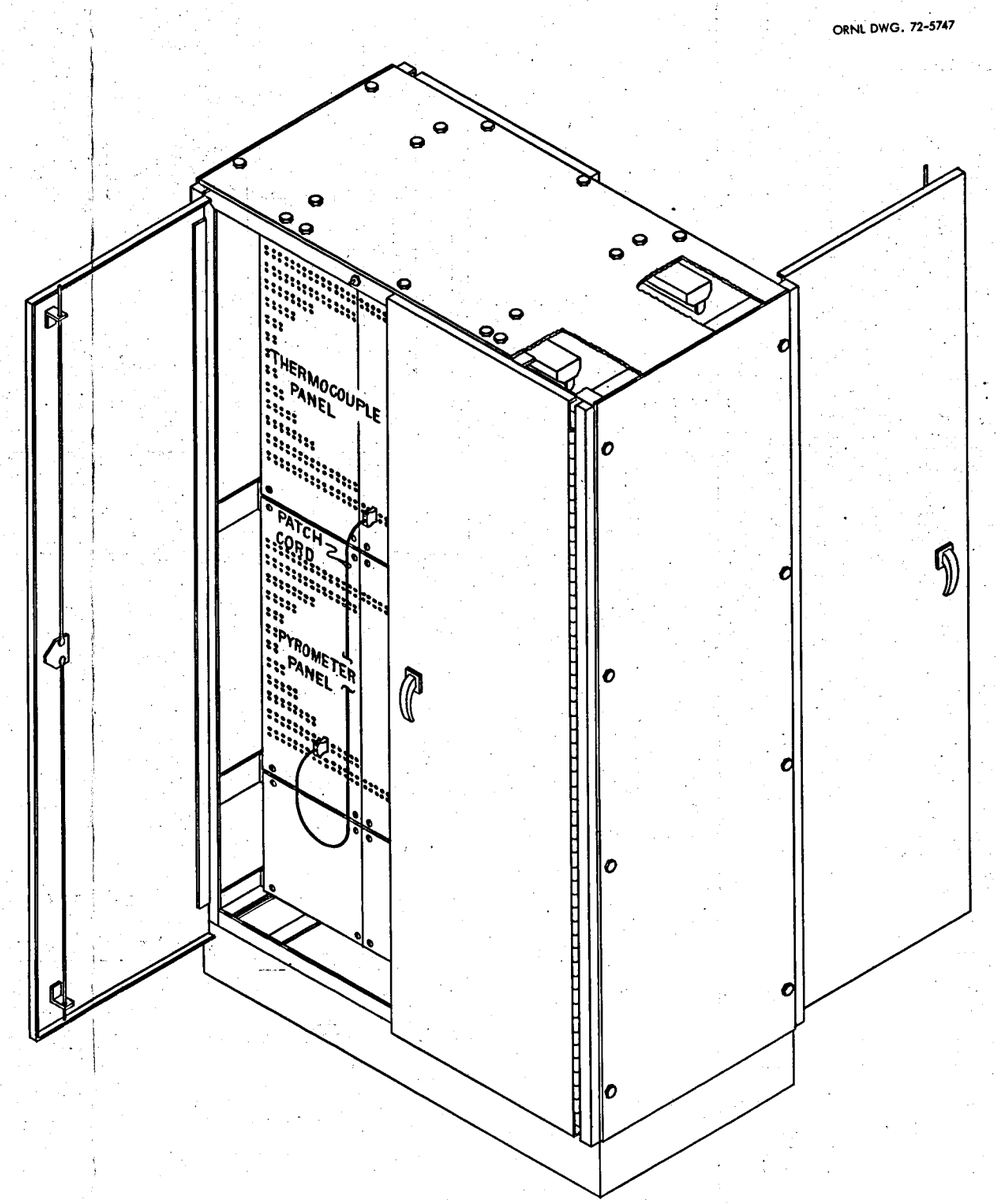


Fig. 6.7.24. Main thermocouple patch panel.

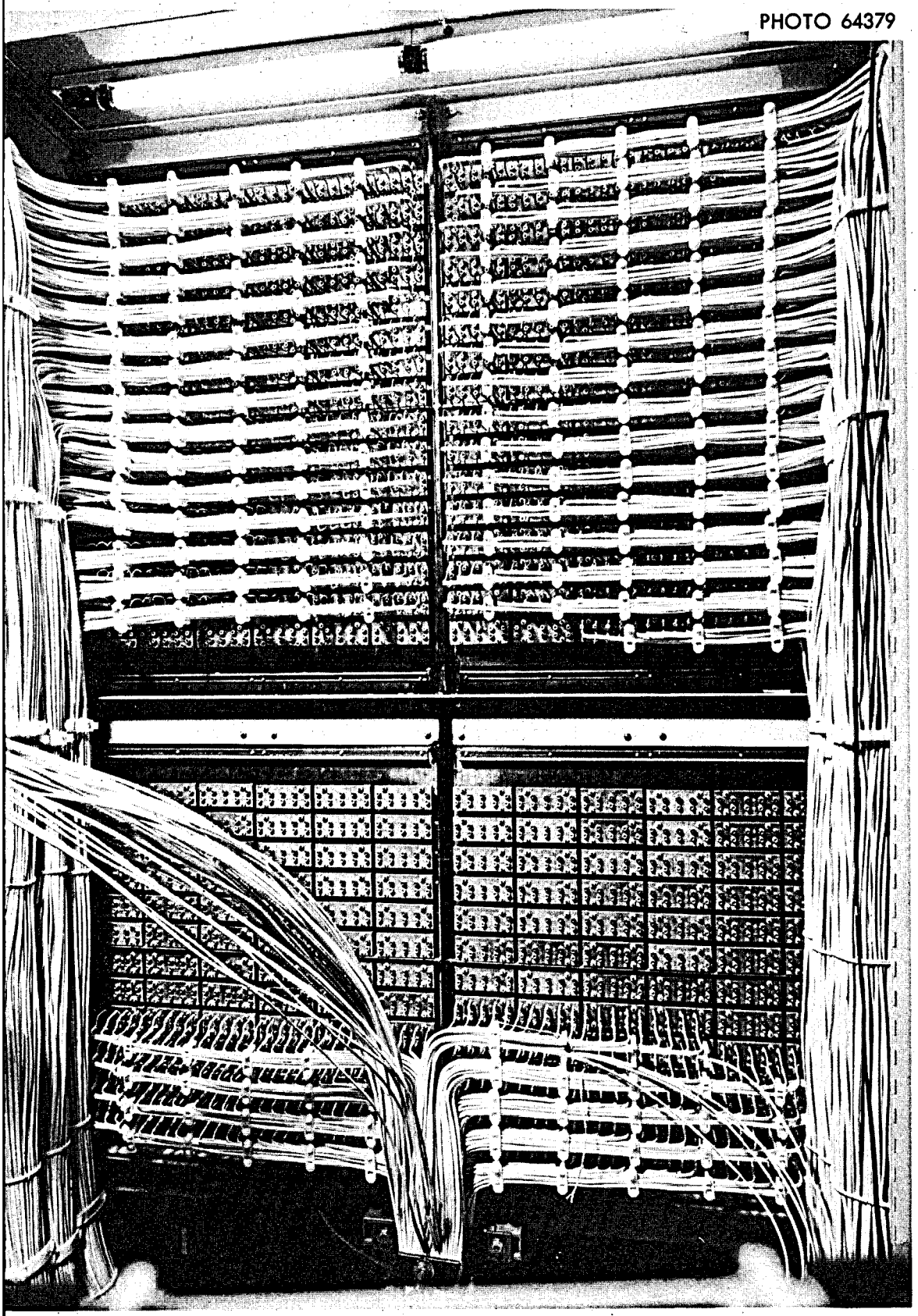


Fig. 6.7.25. Thermocouple patch panel, rear view.

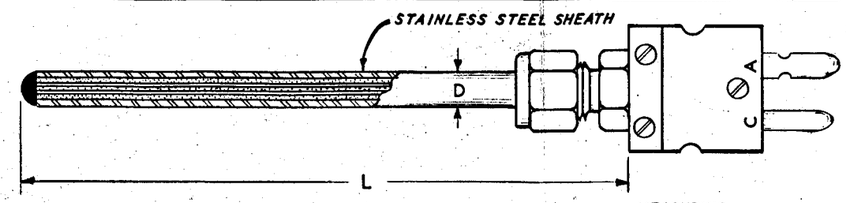


GROUNDED JUNCTION TYPE

| ITEM | L | D | ORNL STORES NO. |
|---|---|---|---|
| 1 | 12 | .040 | 06-978-0400 |
| 2 | 24 | .040 | 06-978-0410 |
| 3 | 36 | .040 | 06-978-0420 |
| 4 | 12 | .062 | 06-978-0430 |
| 5 | 24 | .062 | 06-978-0440 |
| 6 | 36 | .062 | 06-978-0450 |
| 7 | 12 | .125 | 06-978-0460 |
| 8 | 24 | .125 | 06-978-0470 |
| 9 | 36 | .125 | 06-978-0480 |

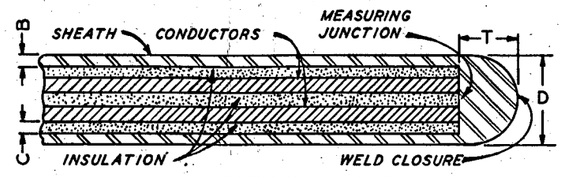


GROUNDED MEASURING JUNCTION

INSULATED JUNCTION TYPE

| ITEM | L | D | ORNL STORES NO. |
|---|---|---|---|
| 10 | 12 | .040 | 06-978-0490 |
| 11 | 24 | .040 | 06-978-0500 |
| 12 | 36 | .040 | 06-978-0510 |
| 13 | 12 | .062 | 06-978-0520 |
| 14 | 24 | .062 | 06-978-0530 |
| 15 | 36 | .062 | 06-978-0540 |
| 16 | 12 | .125 | 06-978-0550 |
| 17 | 24 | .125 | 06-978-0560 |
| 18 | 36 | .125 | 06-978-0570 |
| * 19 | 12 | .125 | 06-978-0580 |

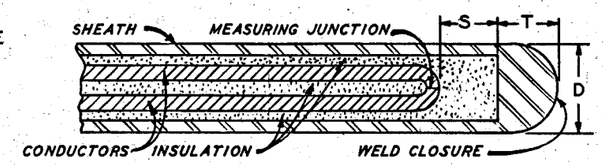


INSULATED MEASURING JUNCTION

* Item 19 only, Premium Grade Wire (3/8%)

DEFINITION OF SYMBOLS & TOLERANCES

1. D= OUTSIDE DIAMETER OF SHEATH.
2. B= WALL THICKNESS.
3. C= DISTANCE BETWEEN CONDUCTOR O.D. AND SHEATH I.D.
4. T= THICKNESS OF WELD CLOSURE, $B \leq T \leq \frac{D}{2}$.
5. S= DISTANCE FROM MEASURING JUNCTION TO BOTTOM OF WELD CLOSURE. INSULATED JUNCTION $C \leq S \leq \frac{D}{2}$
6. THE DISTANCE BETWEEN THE INSULATED MEASURING JUNCTION AND THE SHEATH I.D. SHALL BE MORE THAN OR EQUAL TO C
7. ALL DIMENSIONS ARE IN INCHES.

NOTE:

THE ASSEMBLY SHALL BE IN STRICT ACCORDANCE WITH COMPANY SPECIFICATION IS 124.

Copy Furnished OTIE
Date JUN 01 1964

| DATE | NO. | REVISION | BY |
|---|---|---|---|
| 10-23-64 | 5 | Add Item 19 | WWJ |
| 5-4-64 | 4 | Redrawn | |

DESIGN RESPONSIBILITY W.W. JOHNSTON

OAK RIDGE NATIONAL LABORATORY
INSTRUMENTATION AND CONTROLS DIVISION

THERMOCOUPLE ASSEMBLY
MODEL 1
SHEATHED ASSEMBLY

| DESIGN | DRAWN | DATE | ACCEPTED | APPROVED | |
|---|---|---|---|---|---|
| W.W. Johnston | W.D. King | 5-4-64 | W.W. Johnston | | Q-900-127A R5 |

Fig. 6.7.26. Thermocouple assembly, model 1 sheathed assembly.

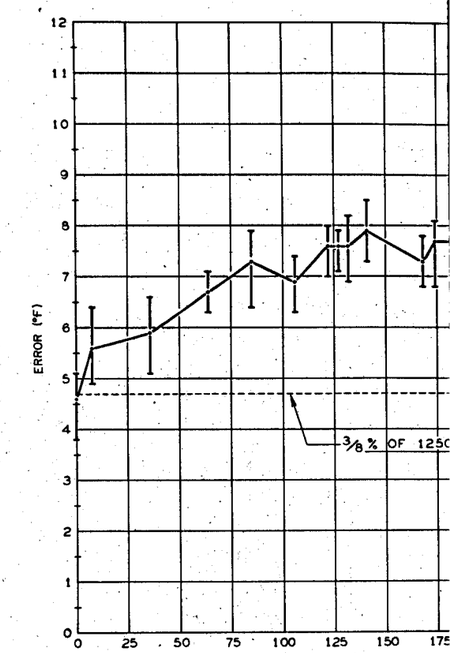


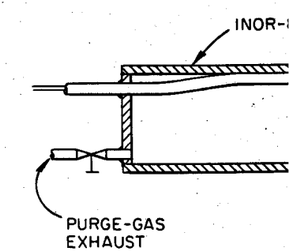

ORNL-DWG 65-8089

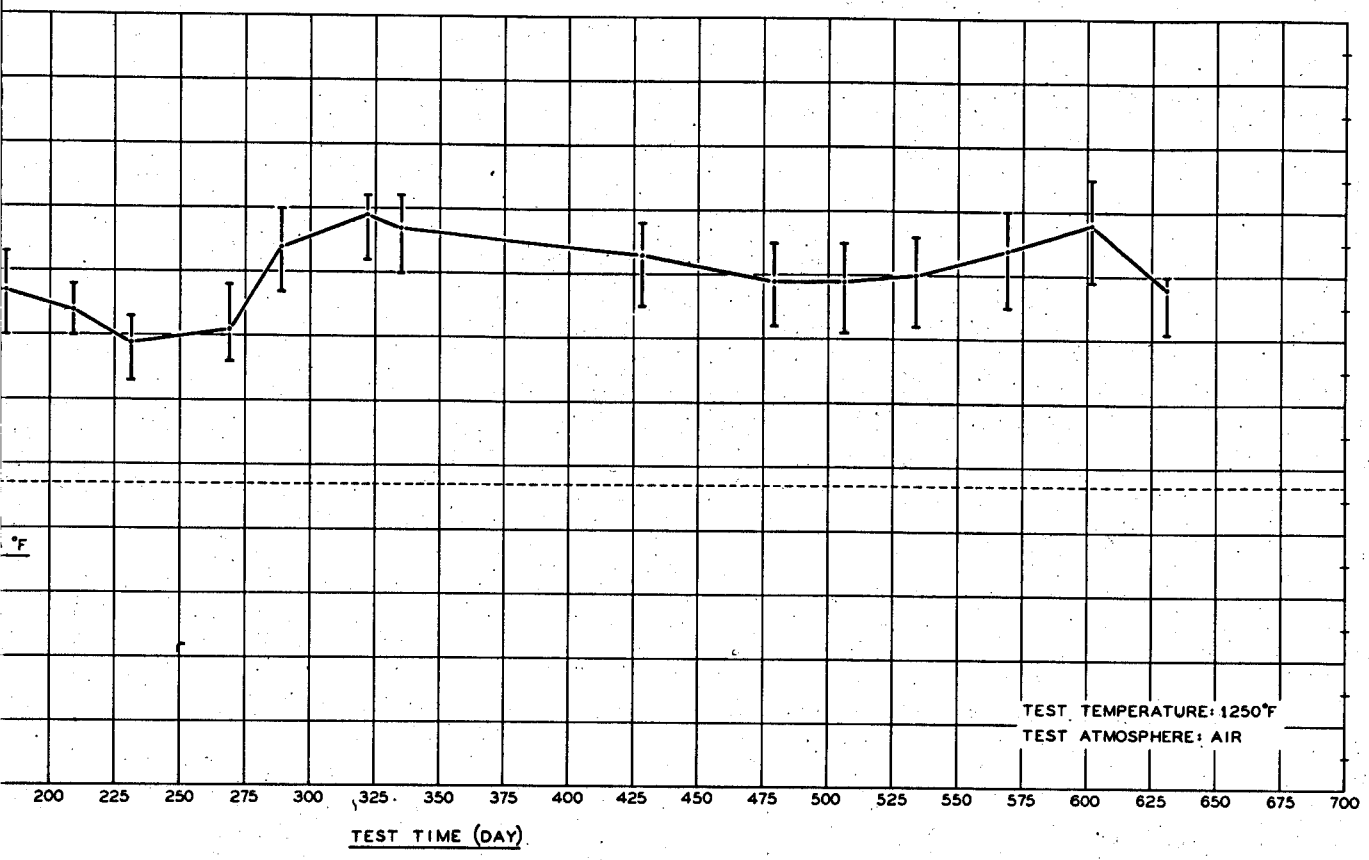


Fig. 6.7.27. Average drift of eight MSRE-type thermocouples.

ORNL-LR-DWG 73990

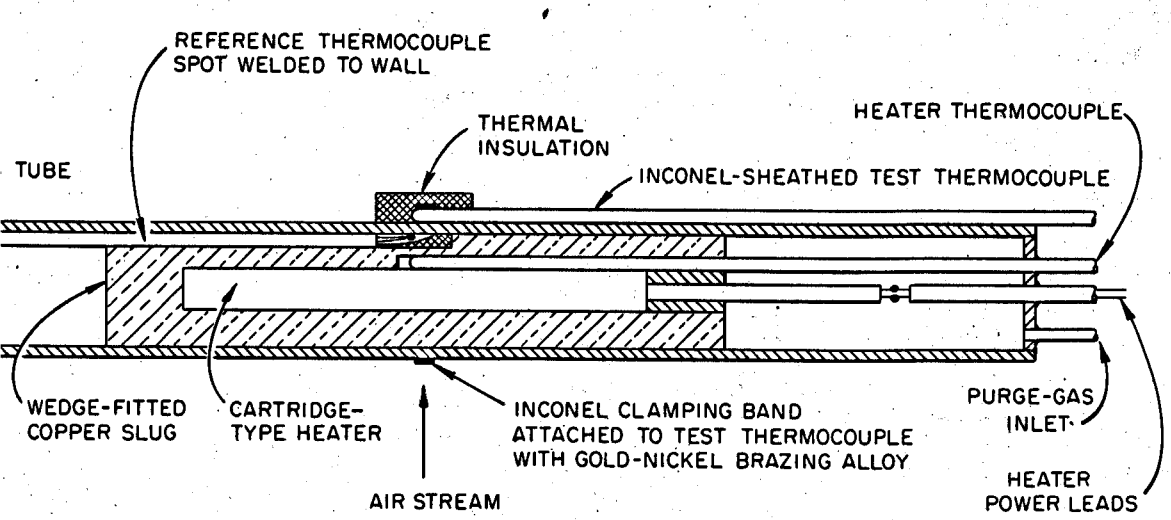


Fig. 6.7.28. Sectional view of radiator thermocouple test apparatus.

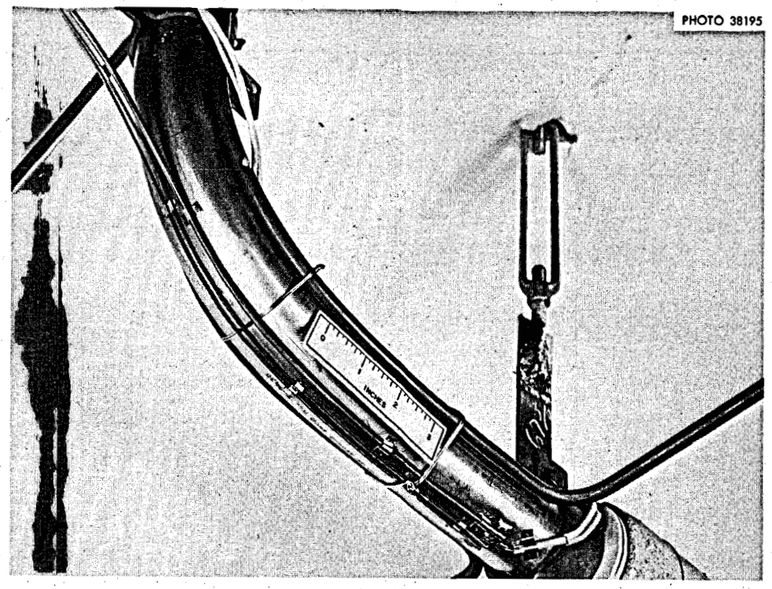


Fig. 6.7.29. Engineering test loop, thermocouple installation.

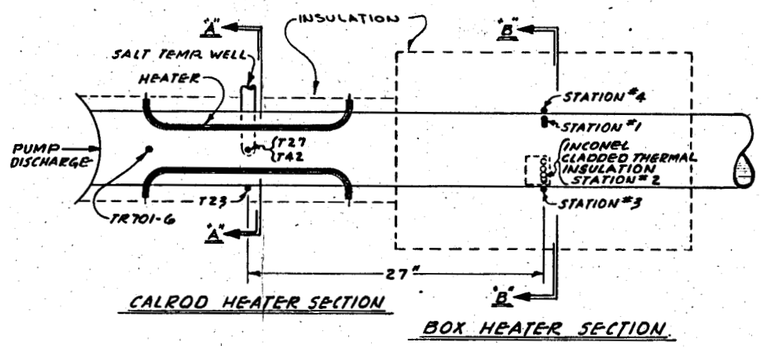


Fig. 6.7.30. Thermocouple locations, thermocouple test, MSRE pump test loop.

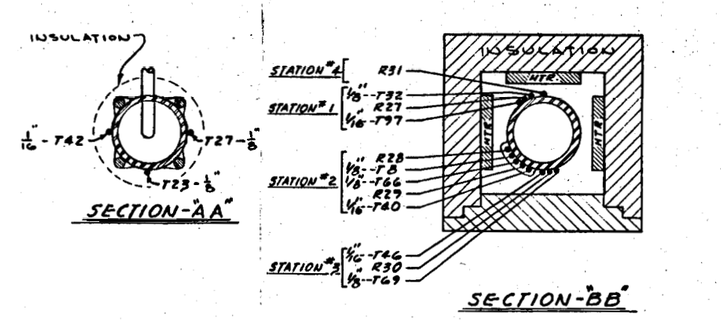


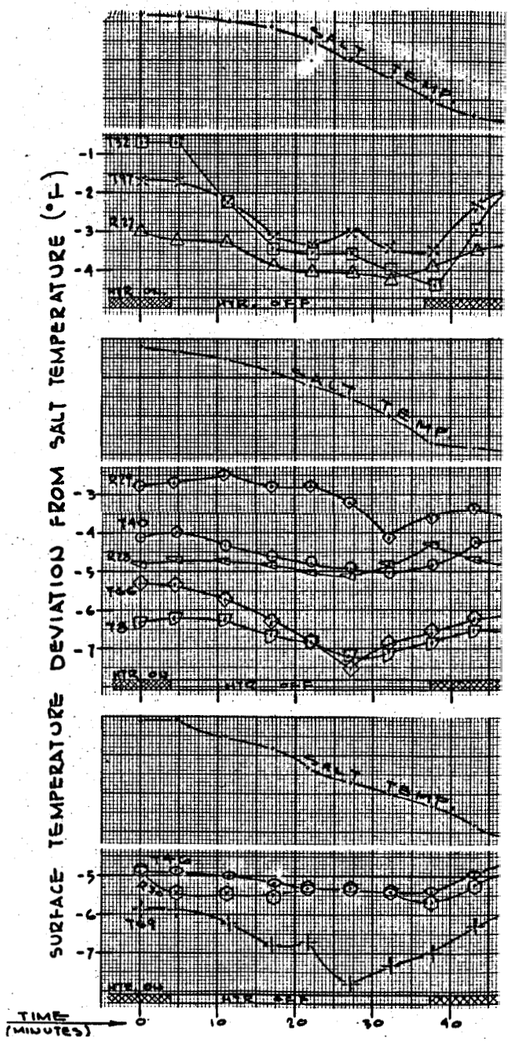


Fig. 6.7.31. Thermocouple test, box heater section, statio

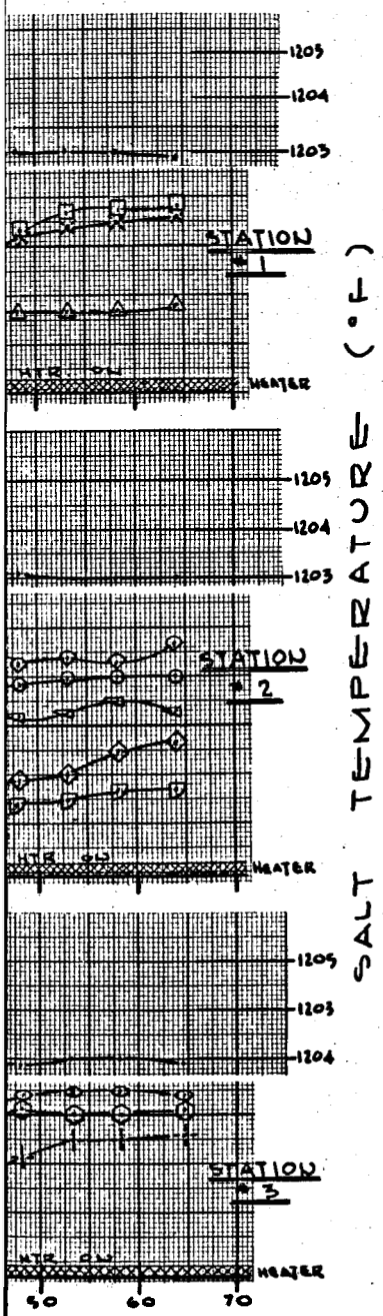


as 1, 2, and 3, pump test loop.

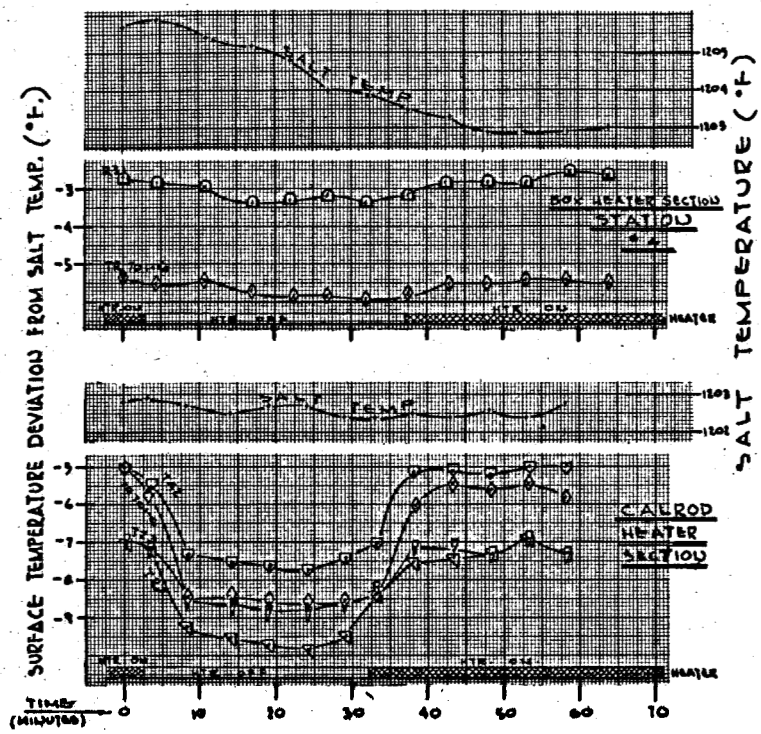


Fig. 6.7.32. Thermocouple test, box heater section, station 4 and Calrod heater section, pump test loop.

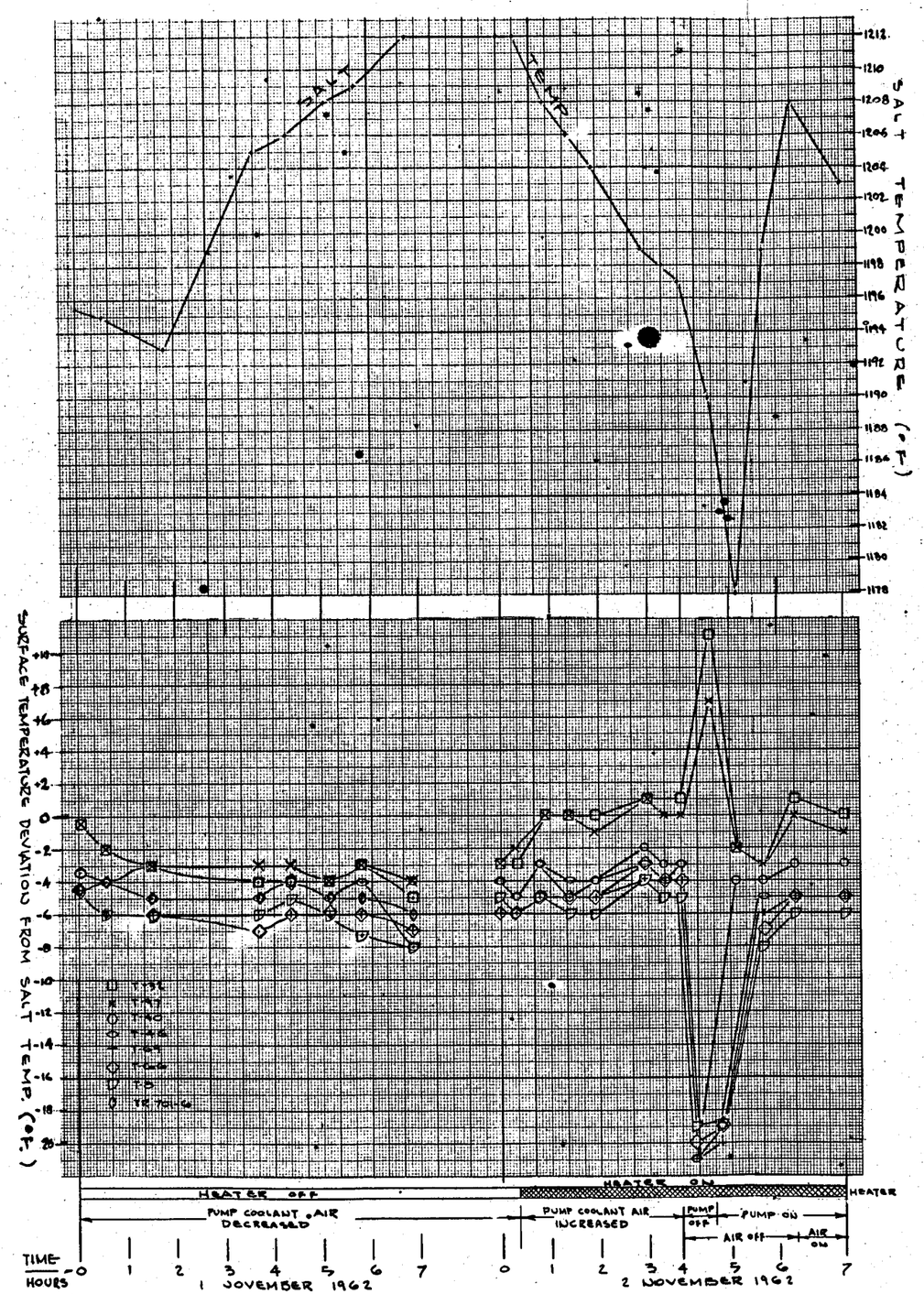


Fig. 6.7.33. Thermocouple test, MSRE pump test loop, deviation from salt temperature.

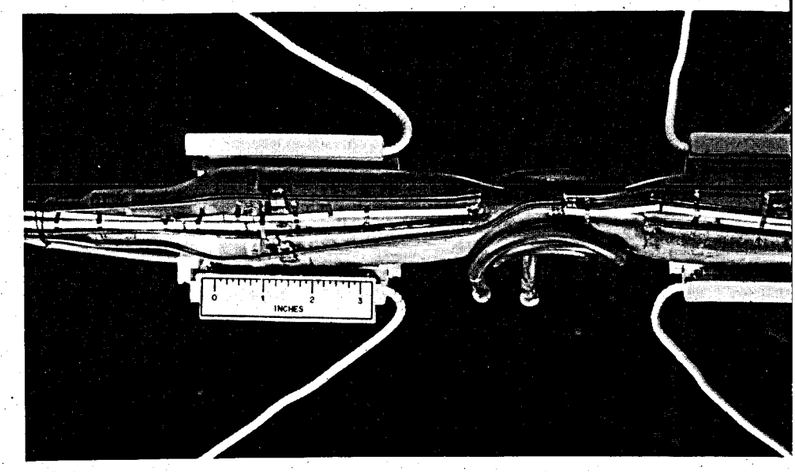


Fig. 6.7.34. Freeze valve thermocouple installation.

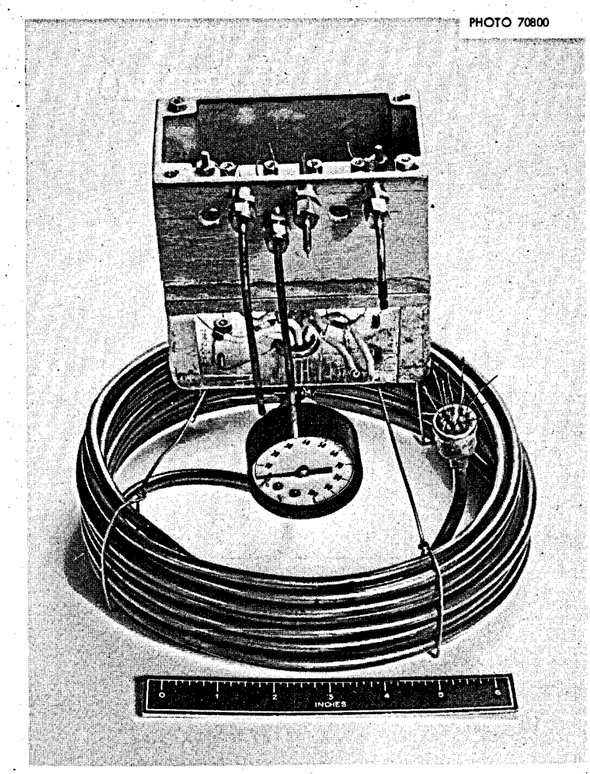


Fig. 6.7.35. Radiation test assembly, multiconductor thermocouple cable, disconnect,

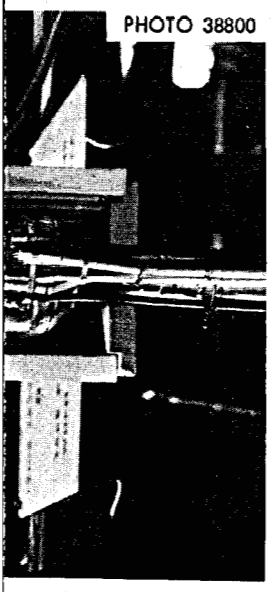


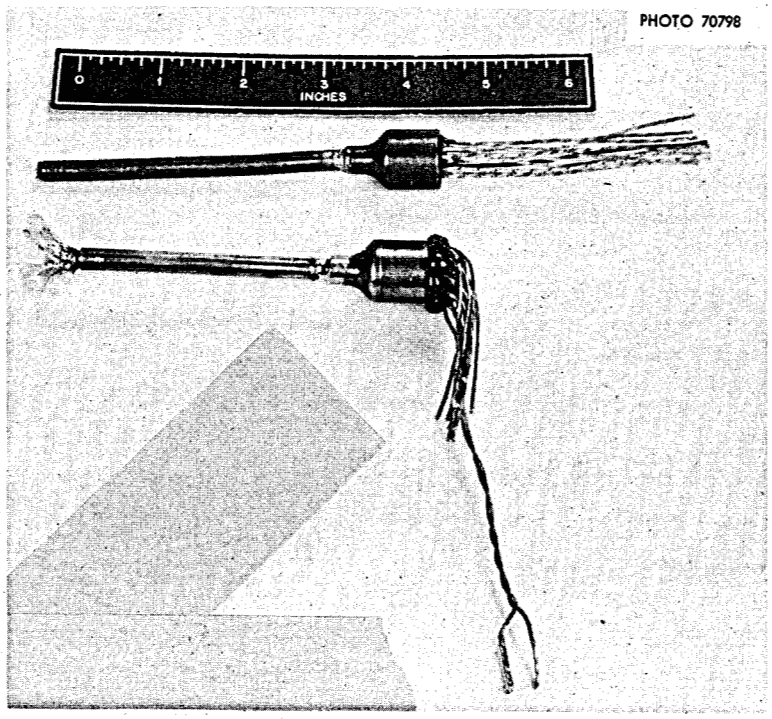


Fig. 6.7.36. Epoxy end seal after seven weeks exposure to $10^6$ R/hr $^{60}$Co gamma radiation.

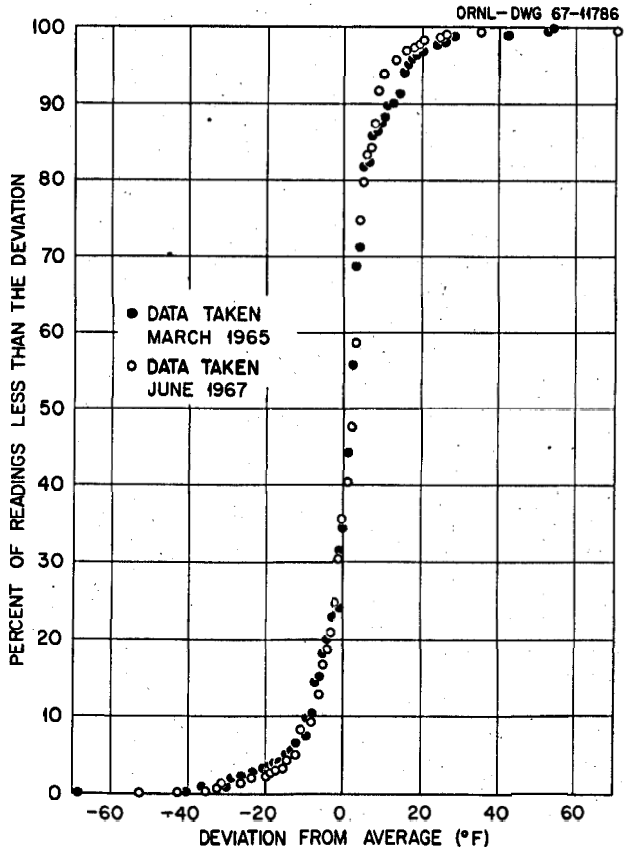


d end seals.

Fig. 6.7.37. Comparison of MSRE thermocouple data from March 1965 and June 1967.

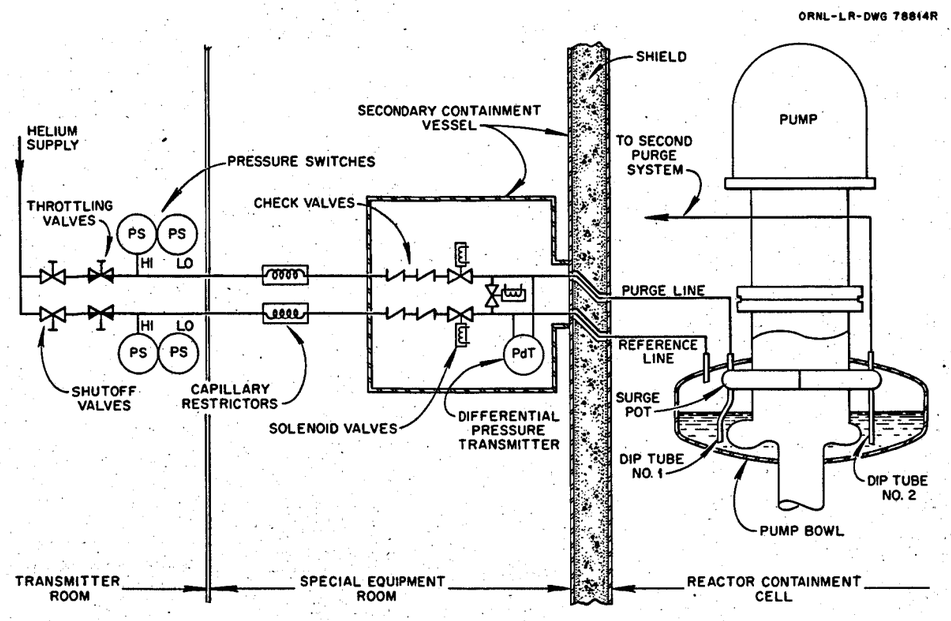


Fig. 6.8.1. MSRE bubbler-type level indicating system.

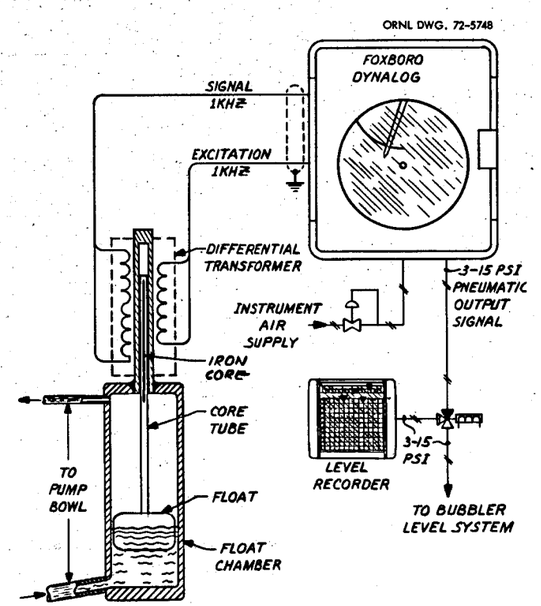


Fig. 6.9.1. Ball-float-type molten salt level transmitter system.

PHOTO 3957

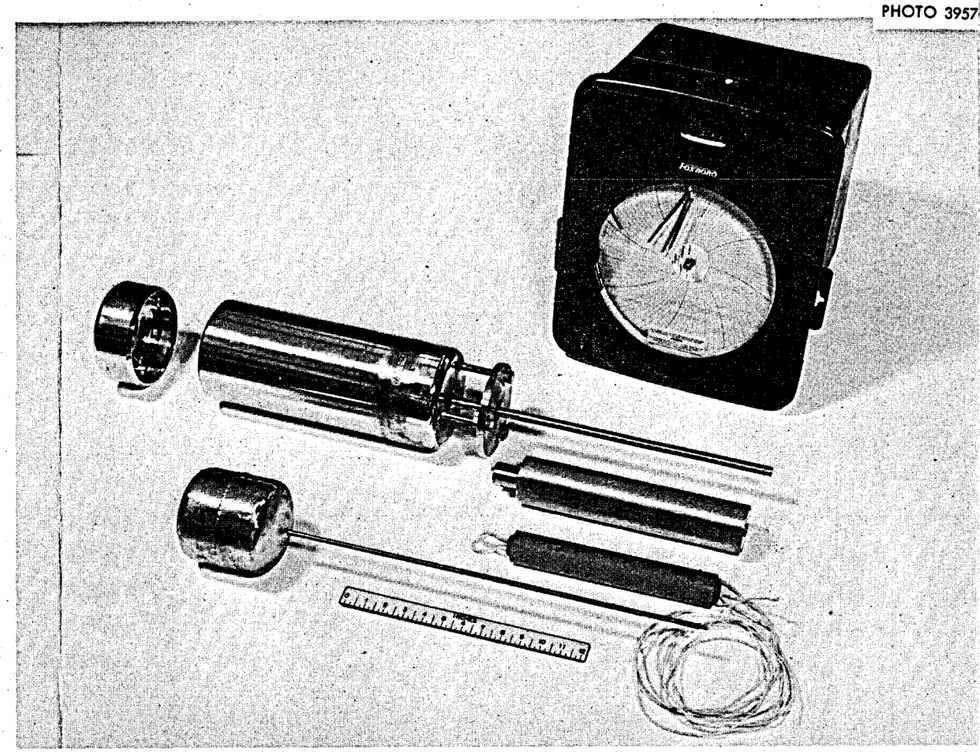

Fig. 6.9.2. Ball-float level transmitter components.

PHOTO 372

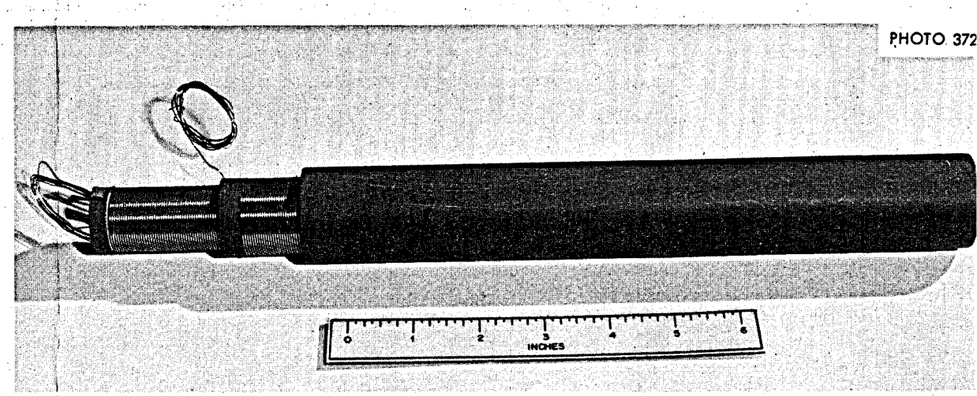


Fig. 6.9.3. High-temperature radiation-resistant differential transformer, assembly.

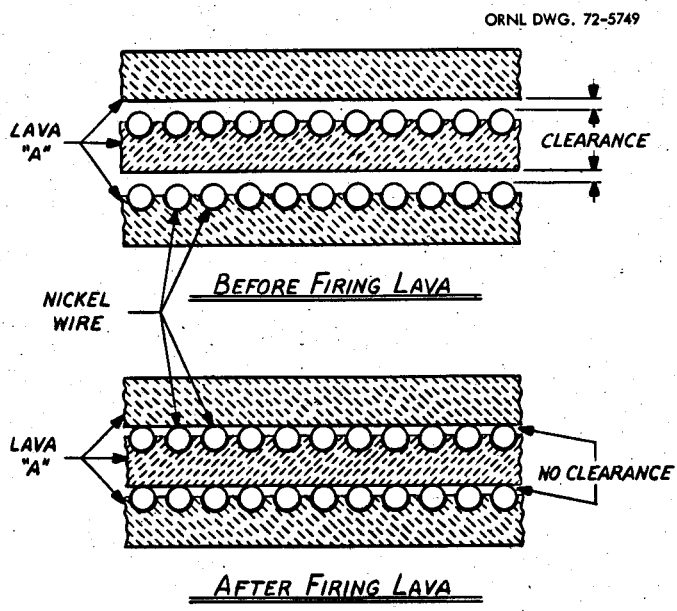


Fig. 6.9.4. High-temperature radiation-resistant differential transformer, coil winding details.

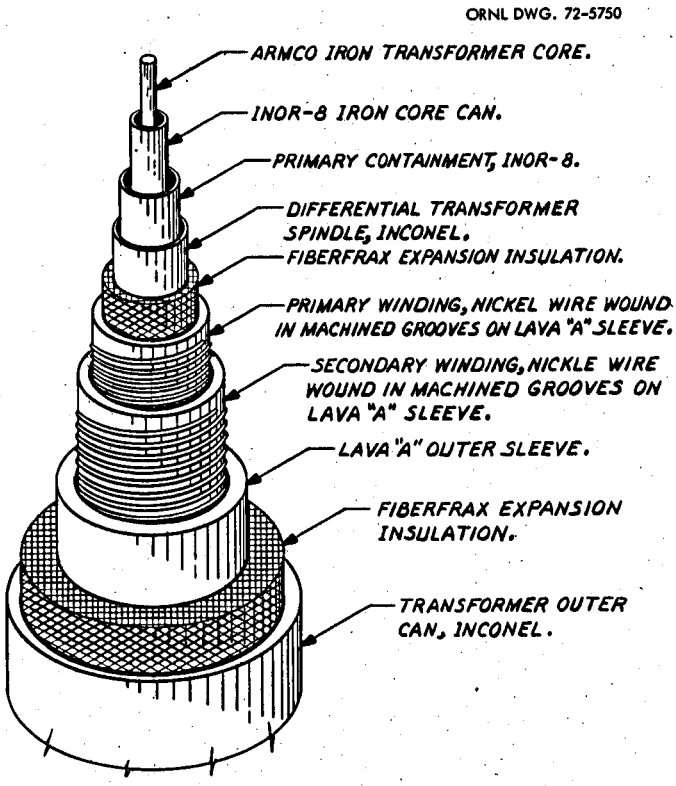


Fig. 6.9.5. High-temperature radiation-resistant differential transformer, coil winding assembly.

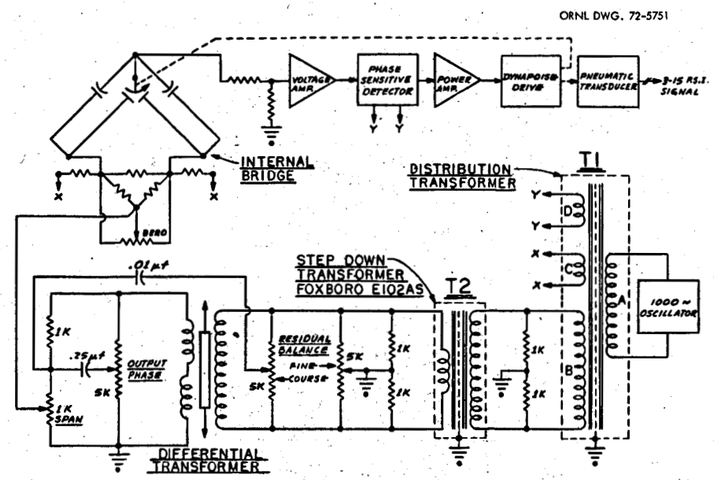


Fig. 6.9.6. Simplified schematic – Dynalog input circuit for ball-float transmitter.

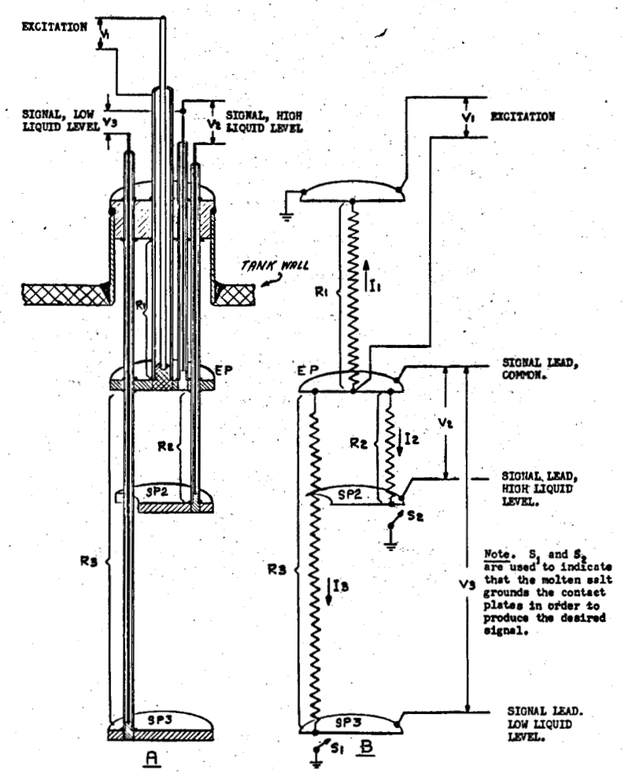


Fig. 6.10.1. Theory of operation of molten-salt single-point liquid level indicator.

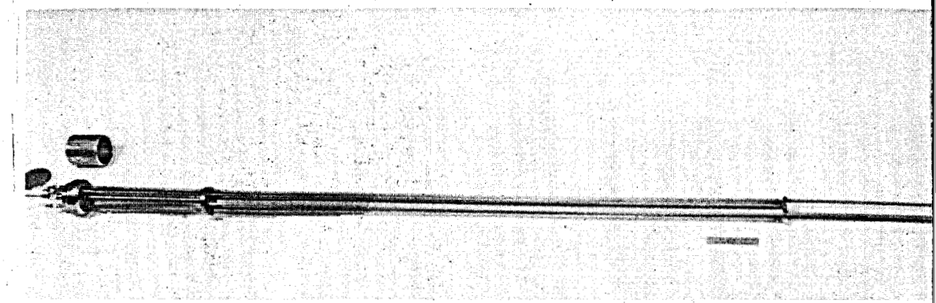

Fig. 6.10.2. Conductivity-type single-point level indicato

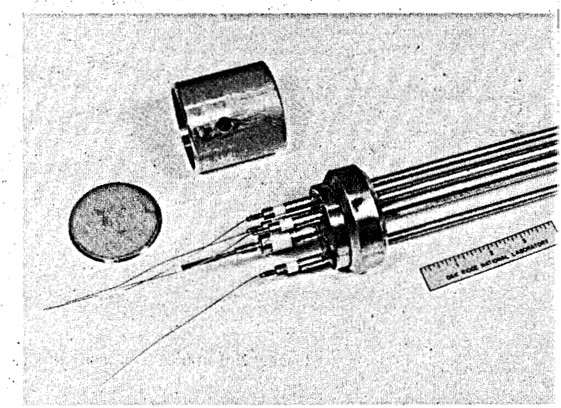

Fig. 6.10.3. Conductivity-type single-point level indicator – detail of mou

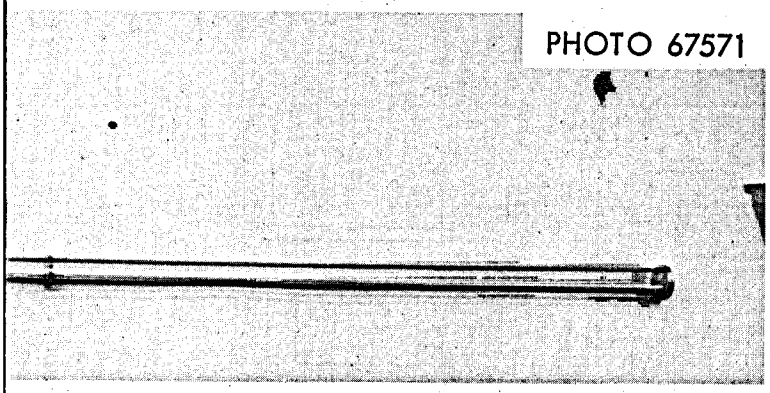


r assembly.

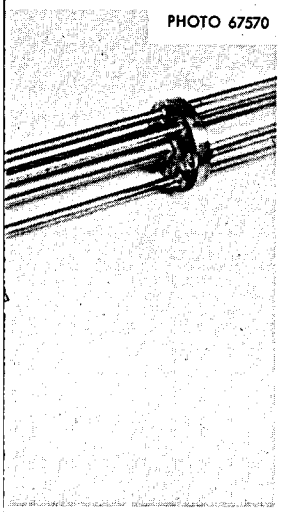


ting head and excitation plate.

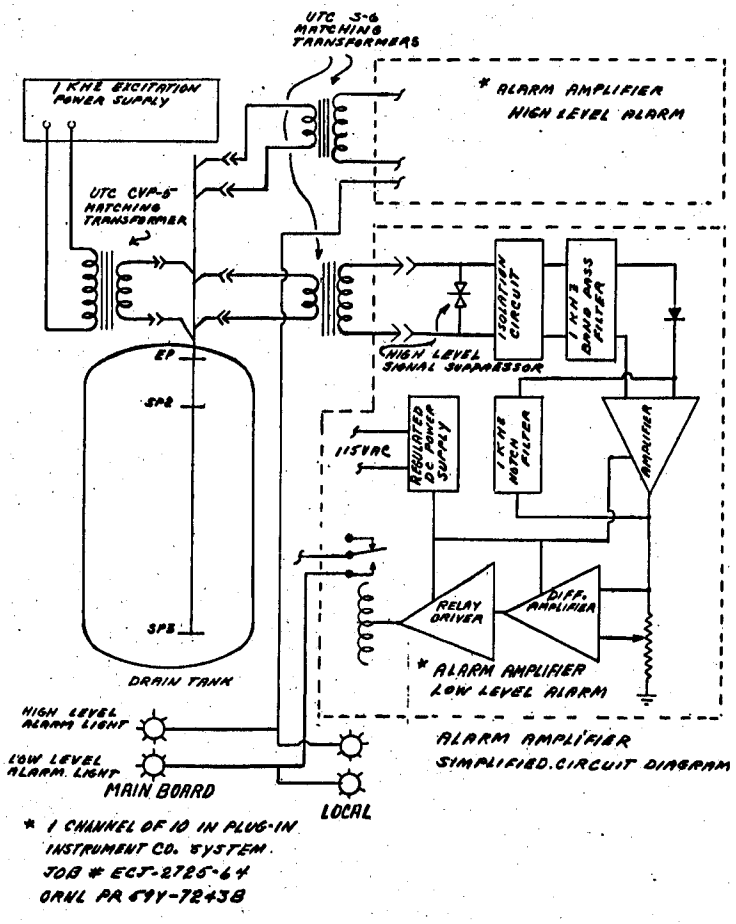


Fig. 6.10.4. MSRE molten-salt level indicator. Simplified system schematic.

PHOTO 71342

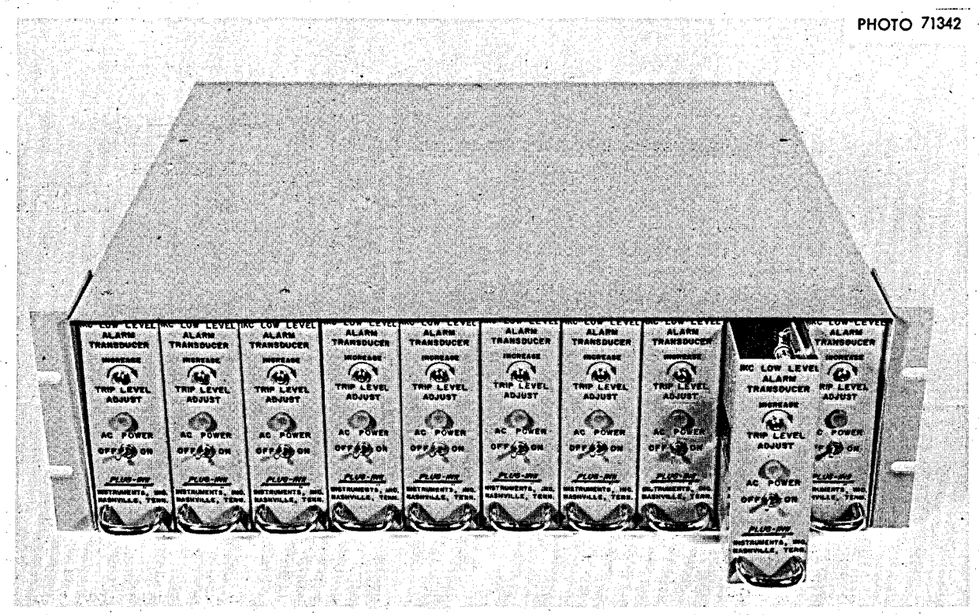


Fig. 6.10.5. Plug-In Instruments, Inc. 10-channel alarm amplifier chassis – front view.

PHOTO 71343

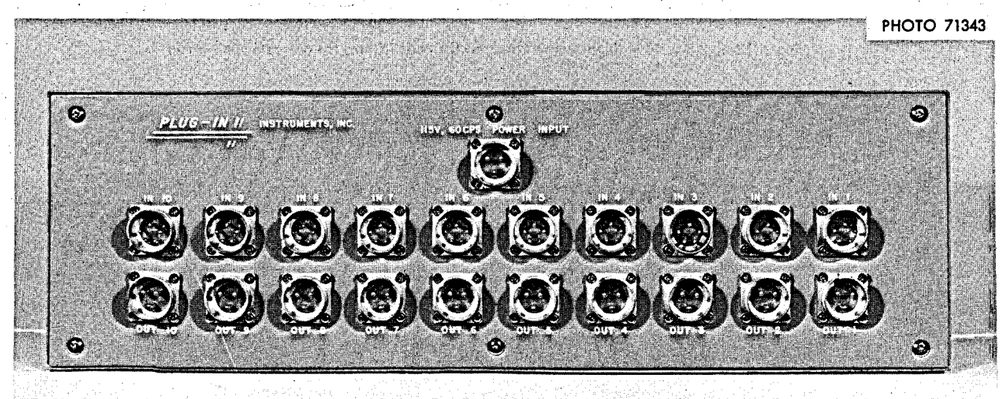


Fig. 6.10.6. Plug-In Instruments, Inc. 10-channel alarm amplifier chassis – rear view.

PHOTO 713

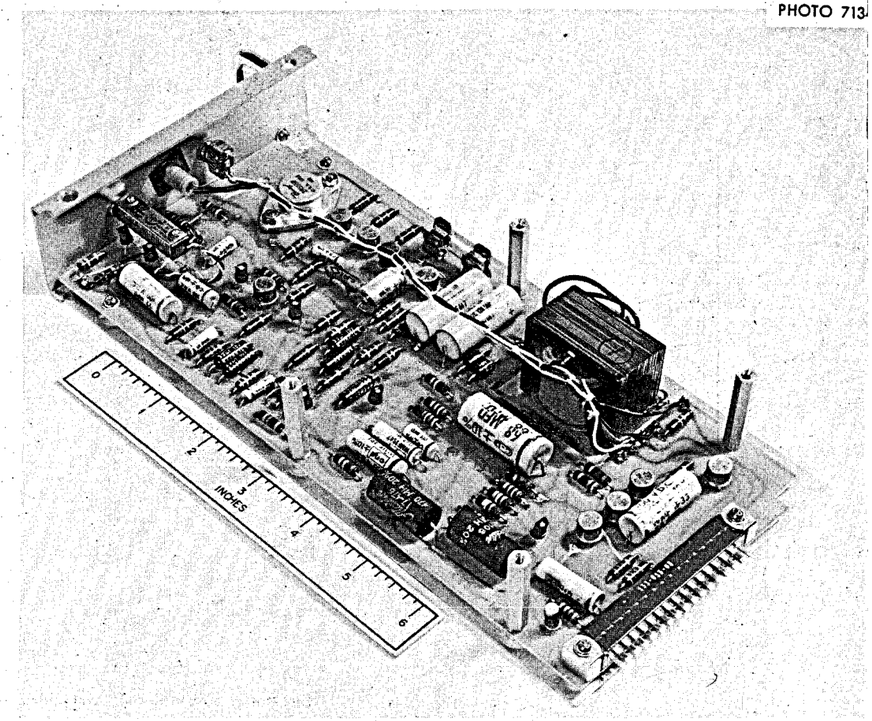


Fig. 6.10.7. Plug-In Instruments, Inc. alarm amplifier module assembly.

PHOT

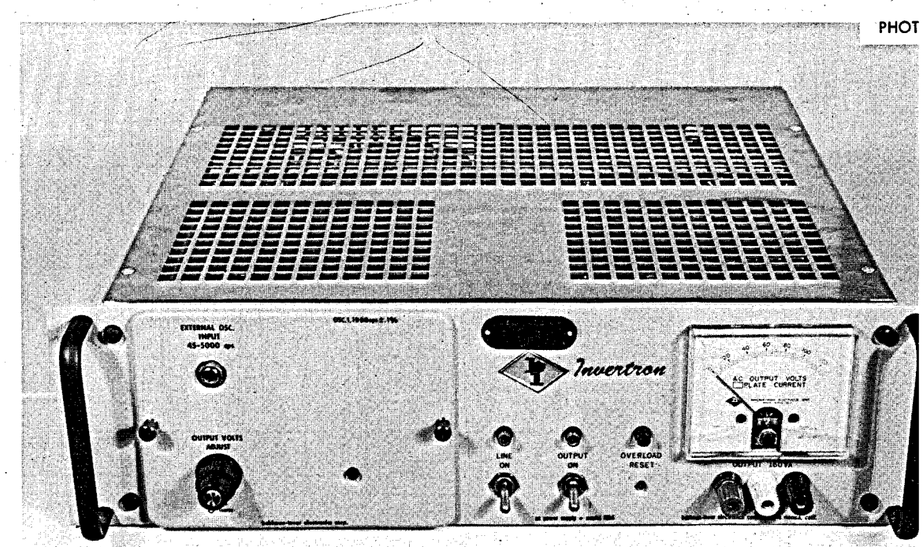


Fig. 6.10.8. Excitation power supply for conductivity-type single-point level indicator.

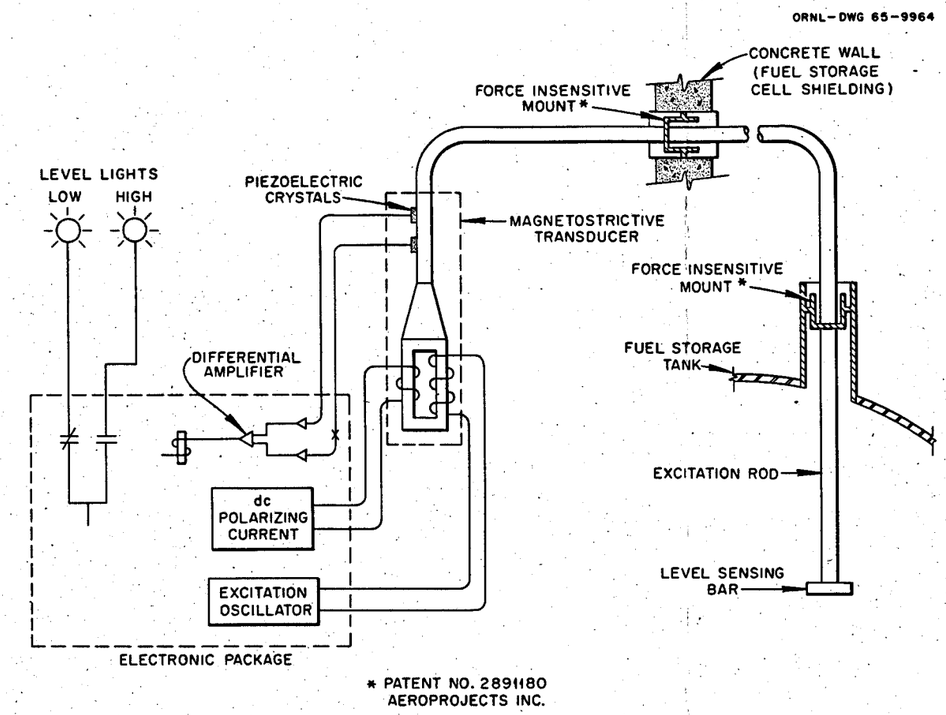


Fig. 6.11.1. Diagram of MSRE fuel storage tank ultrasonic level indicator system.

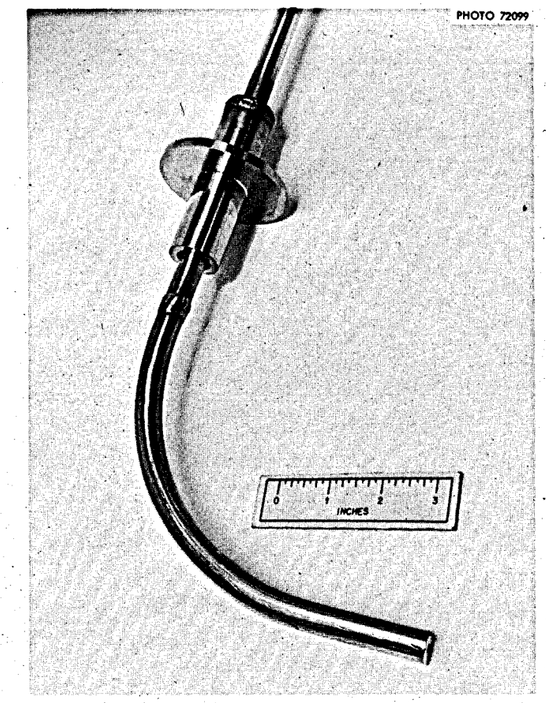


Fig. 6.11.3. MSRE fuel storage tank ultrasonic level probe, force insensitive mount, and excitation rod.

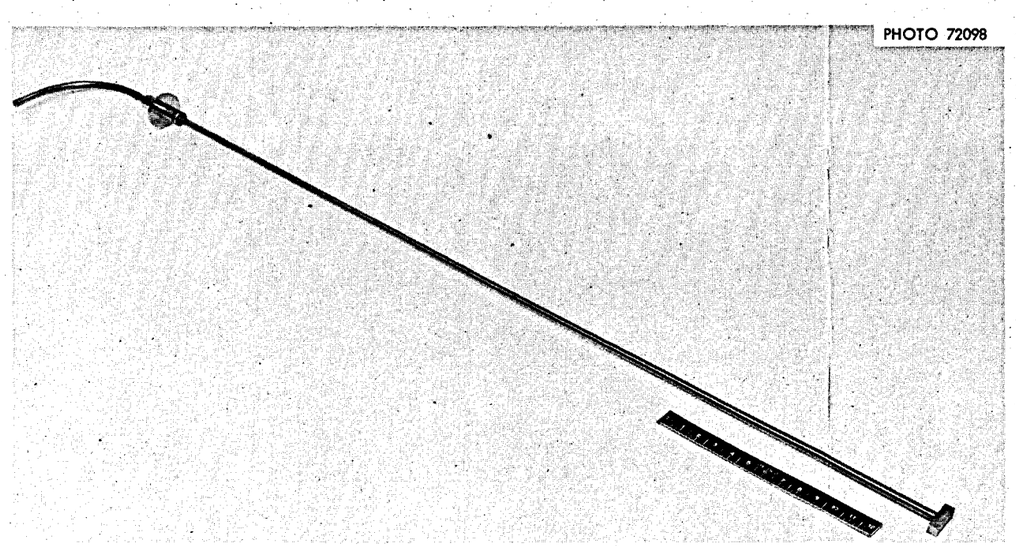


Fig. 6.11.2. Force insensitive mount, excitation rod, and sensing plate before installation in fuel storage tank.

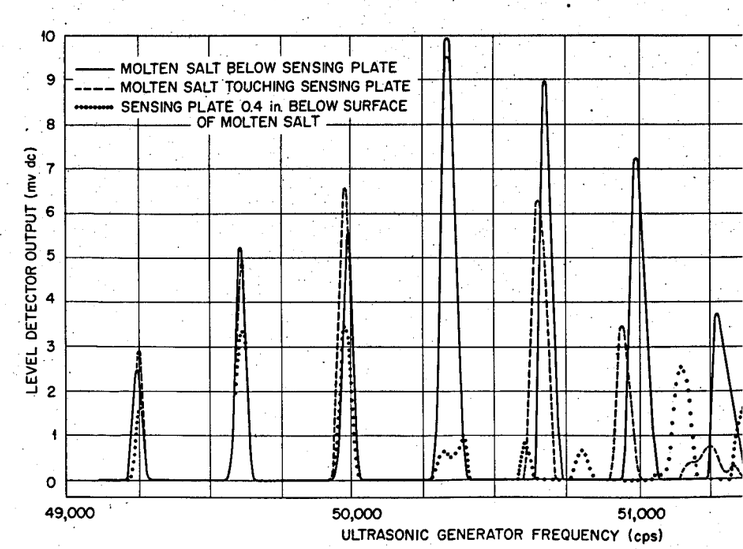


Fig. 6.11.4. Ultrasonic level detector resonance peaks.

ORNL-LR-DWG 78815

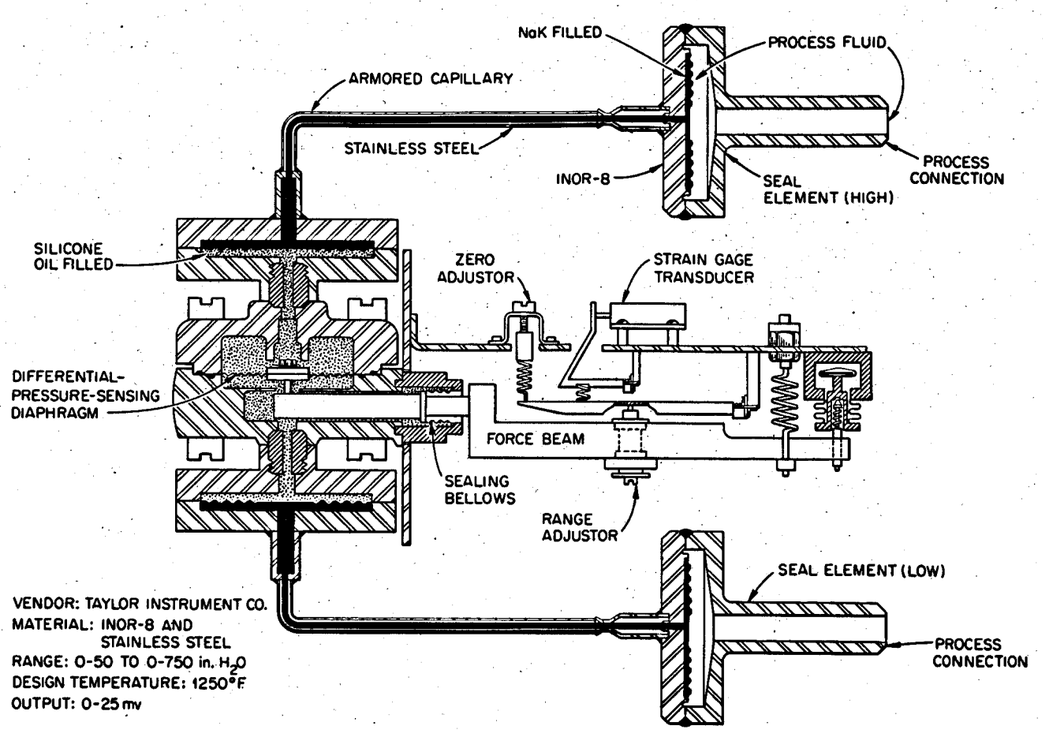


Fig. 6.12.1. All-welded high-temperature NaK-filled differential pressure transmitter.

ORNL-DWG 65-11801

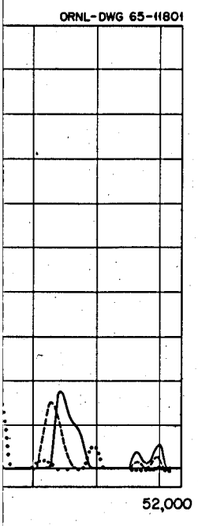

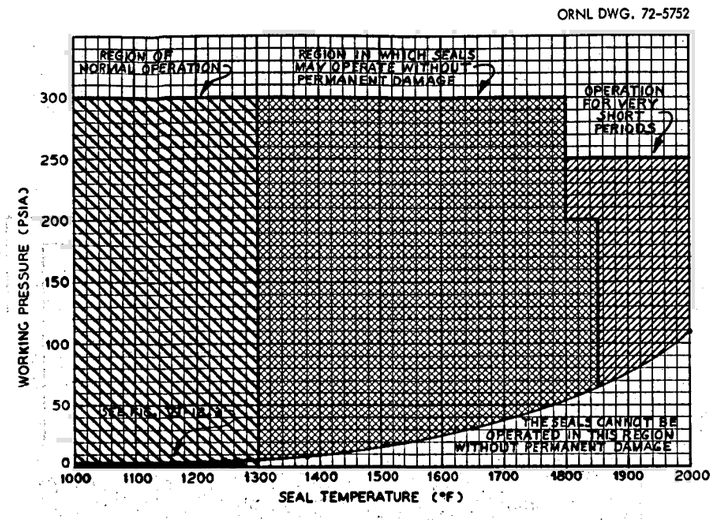


Fig. 6.12.2. Operational limits for NaK-filled diaphragm seal assembly.

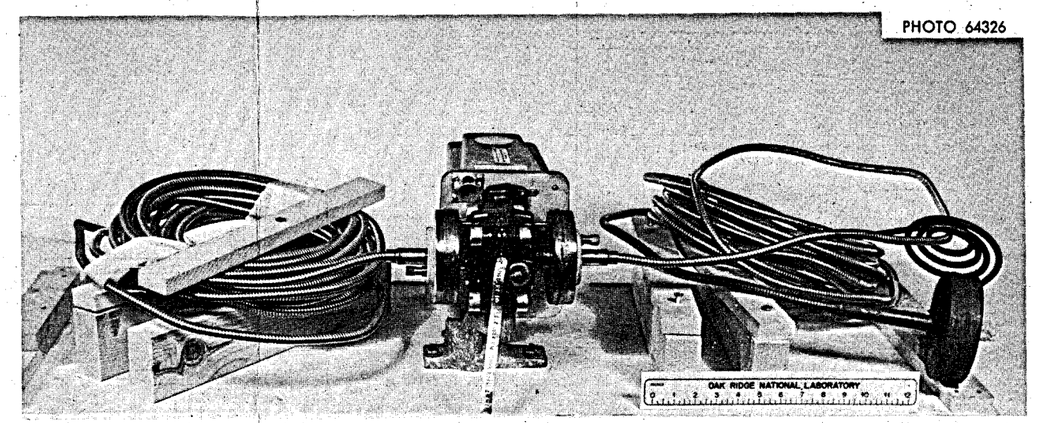


Fig. 6.12.4. NaK-filled differential transmitter assembly.

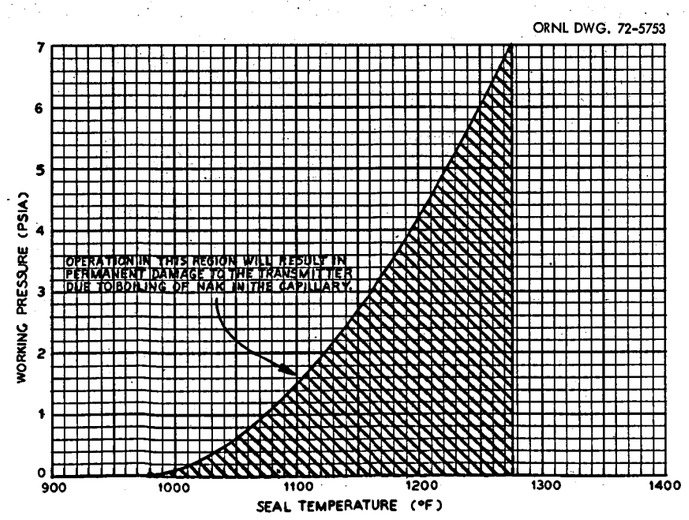


Fig. 6.12.3. Operational limits for NaK-filled diaphragm seal assembly.

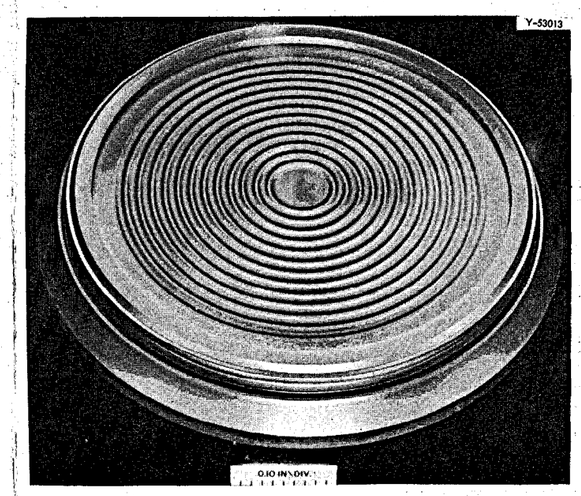


Fig. 6.12.5. Diaphragm seal assembly for NaK-filled differential pressure transmitter.

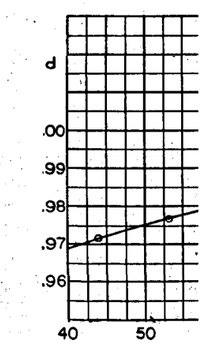


Fig. 6.13.2. Discharge coefficient

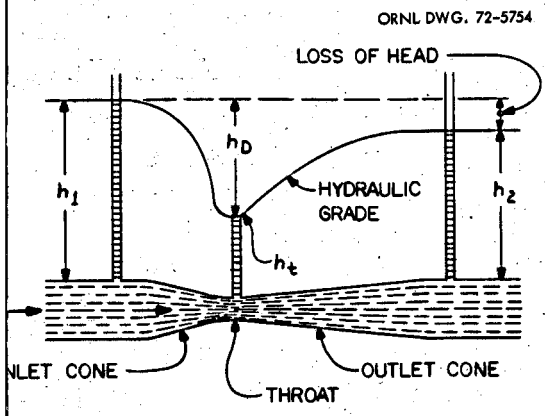


**Fig. 6.13.1. Venturi flow element.**

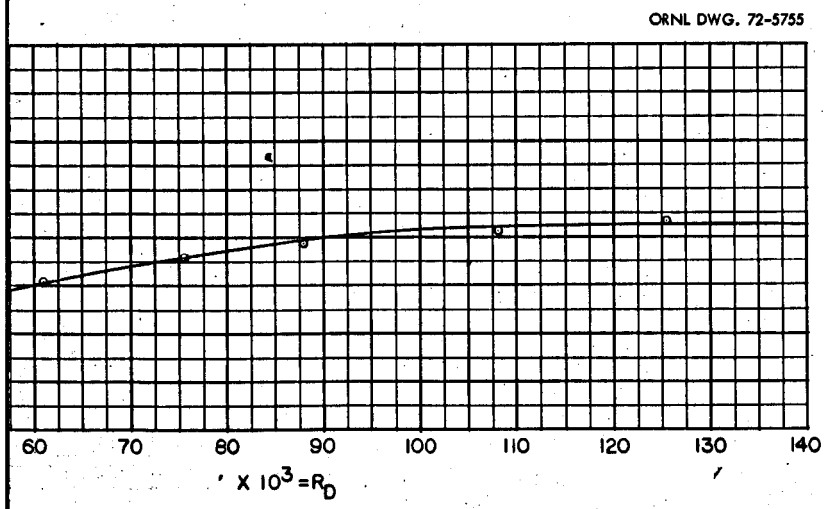


$C_d$ **vs pipe Reynolds number** $R_D$ **for MSRE coolant-salt flow element FE-201A. Tap locations 4 and 7.**

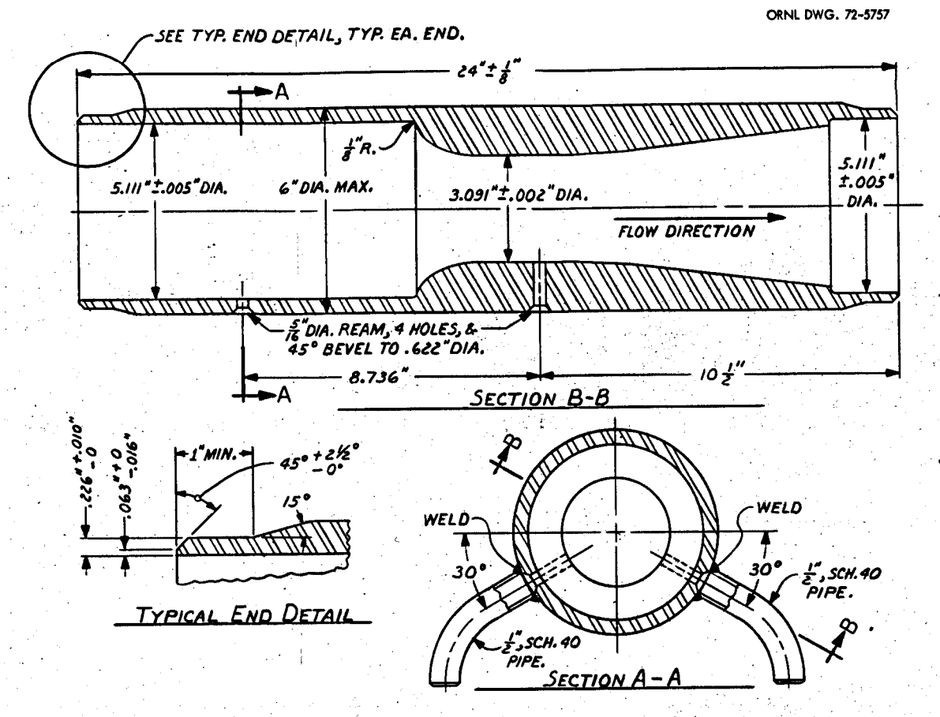


Fig. 6.13.3. MSRE coolant-salt flow element FE-201A.

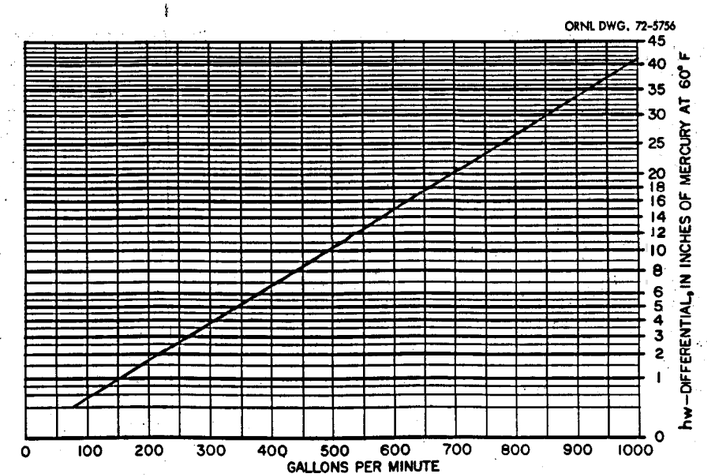


Fig. 6.13.4. Flow vs differential pressure, MSRE coolant-salt flow element FE-201A. Salt temperature 1100°F, inlet pressure 50 psig, tap locations 4 and 7.

REAC R PIPE

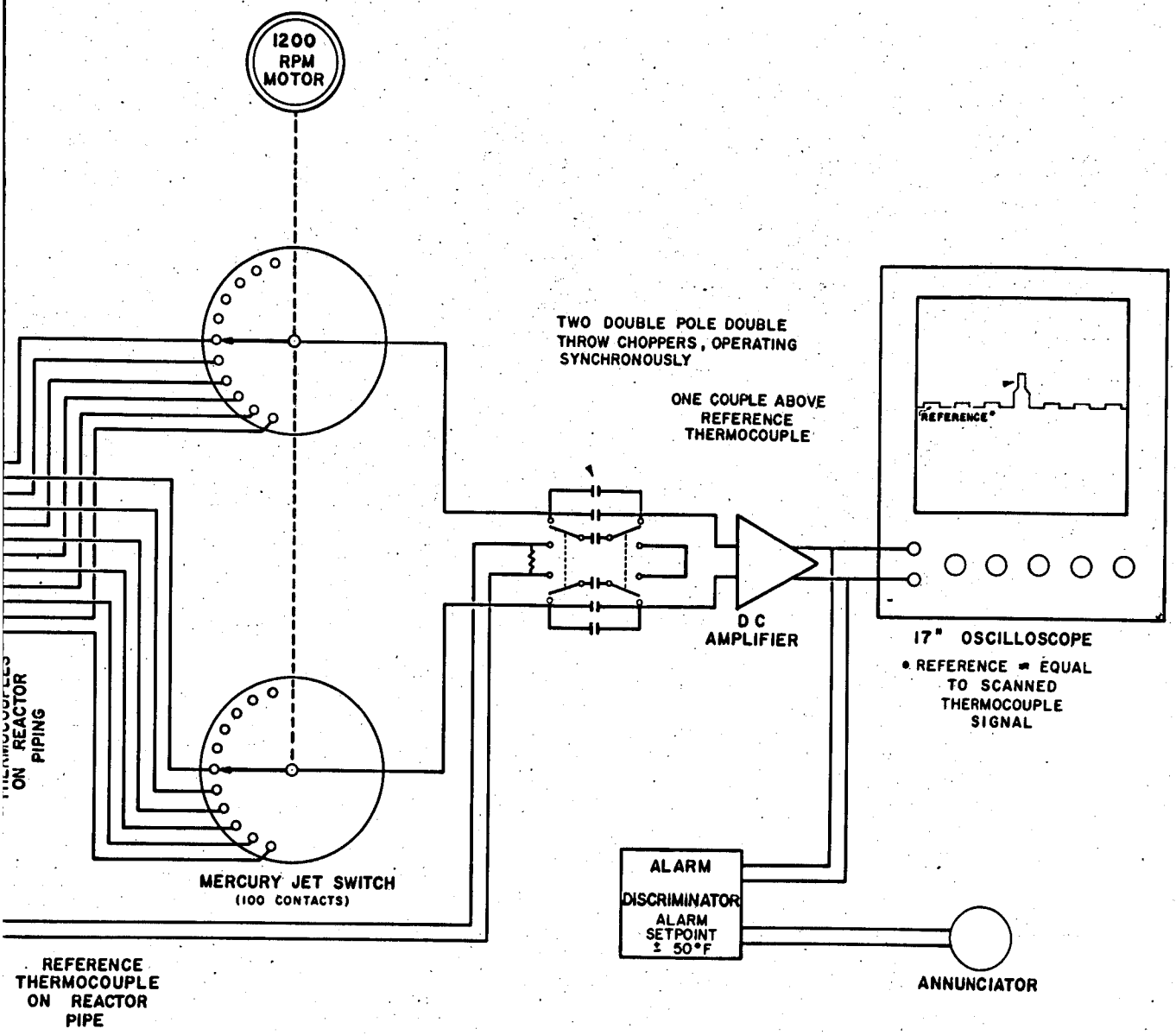


Fig. 6.14.1. Temperature scanning system. Block diagram.

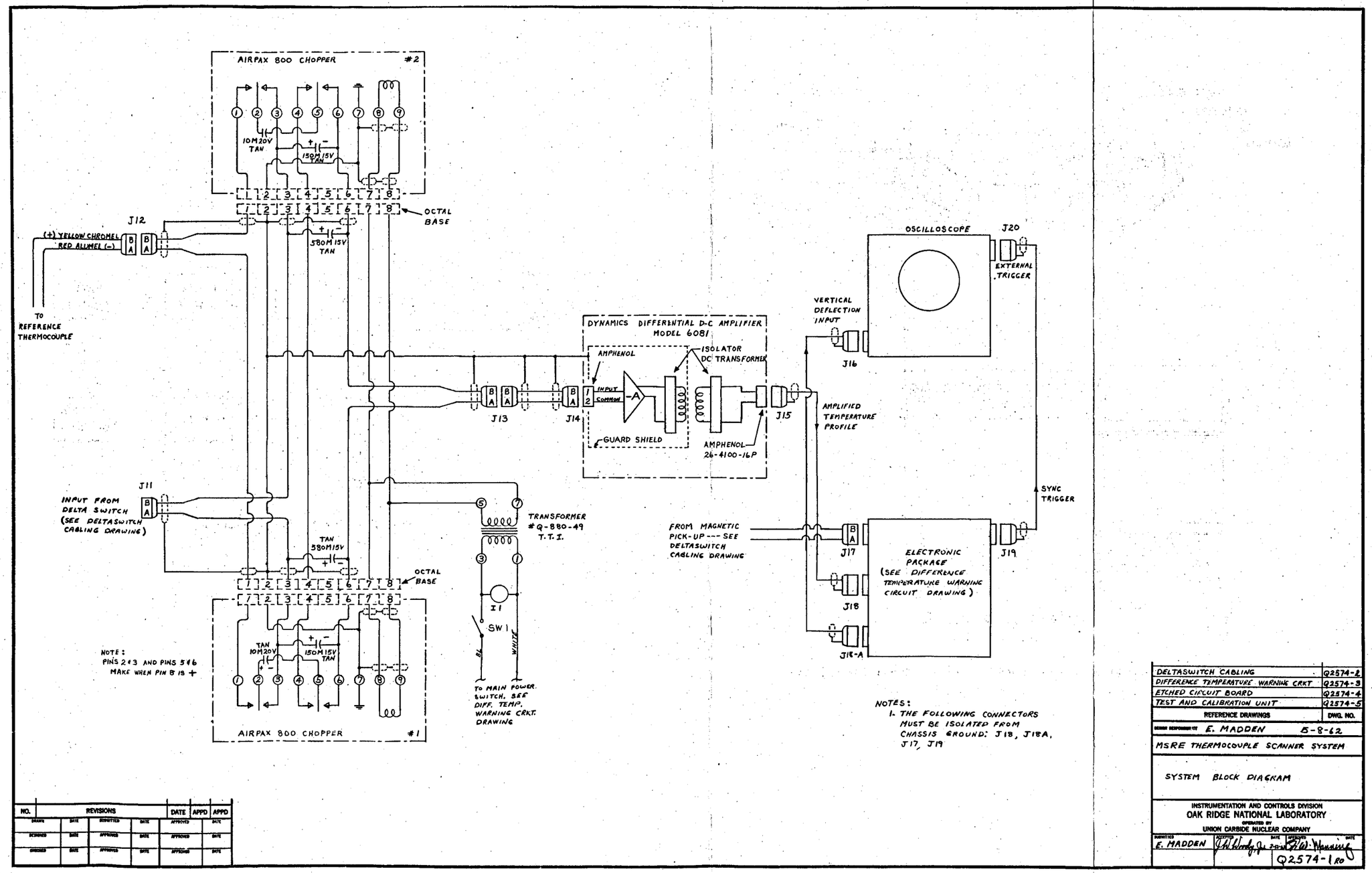


Fig. 6.14.2. MSRE thermocouple scanner system. Block diagram.

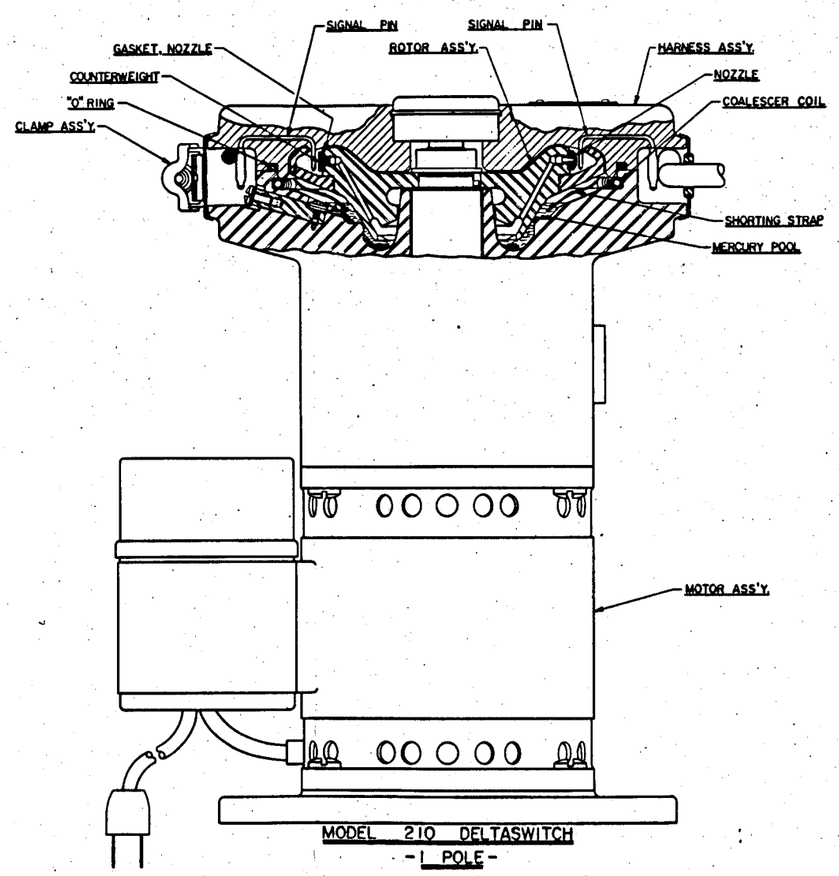


Fig. 6.14.3. Advanced Technology Laboratories' model 210 100-point mercury jet switch.

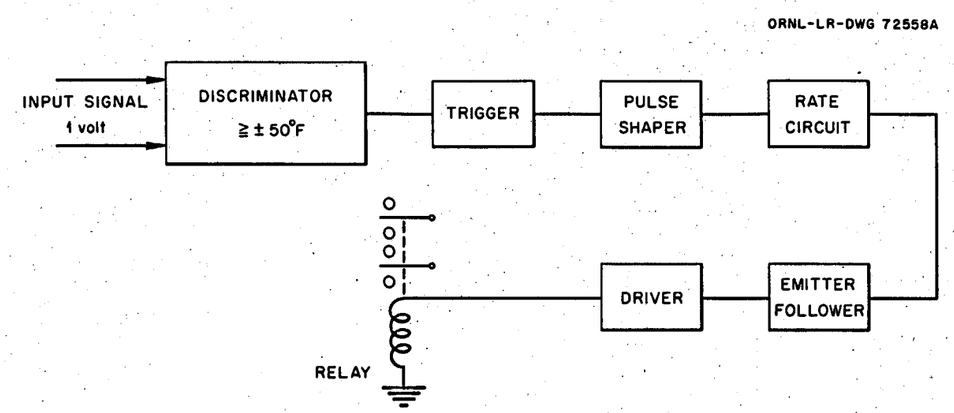


Fig. 6.14.4. Block diagram – alarm discriminator.

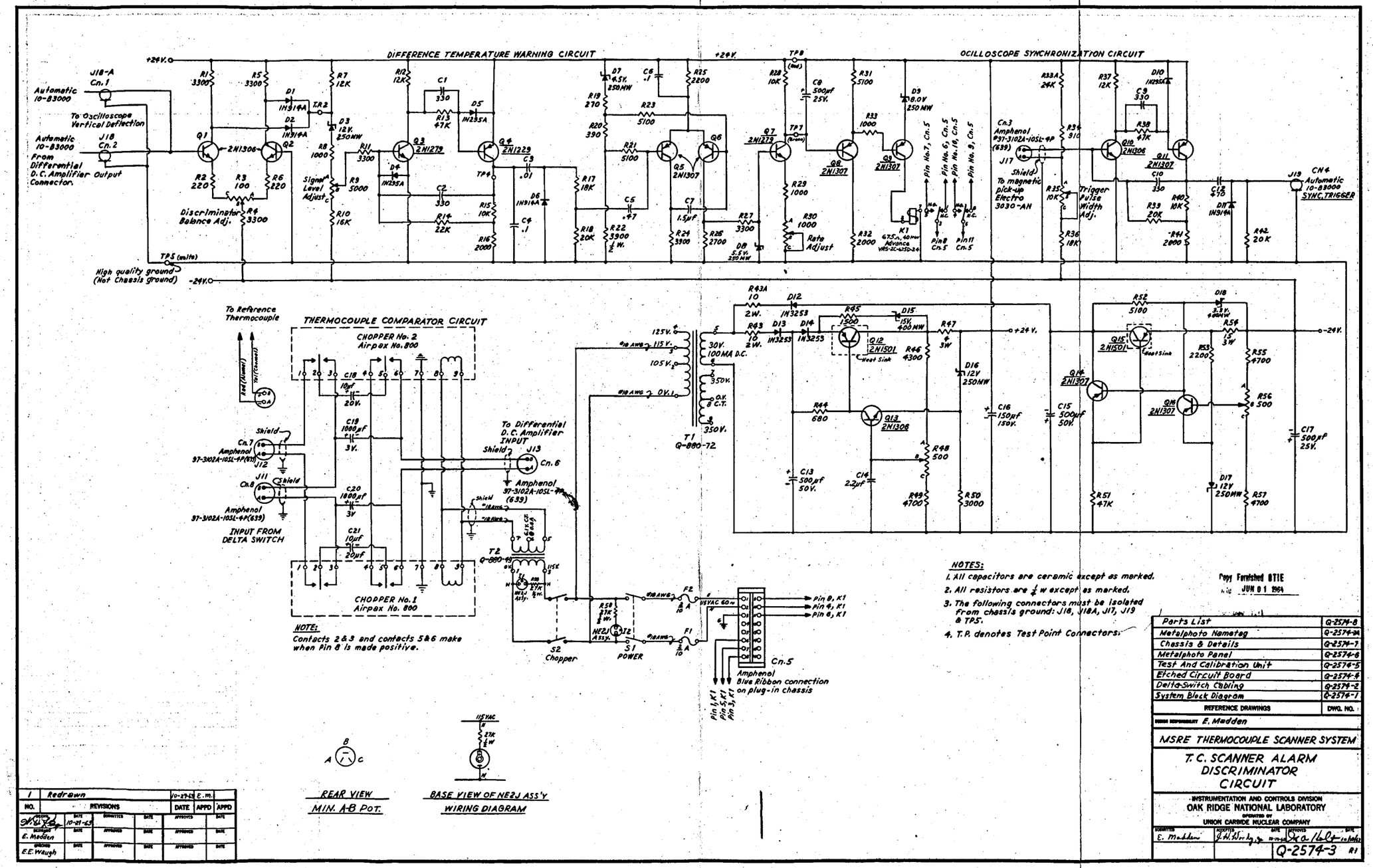


Fig. 6.14.5. MSRE thermocouple scanner alarm discriminator circuit.

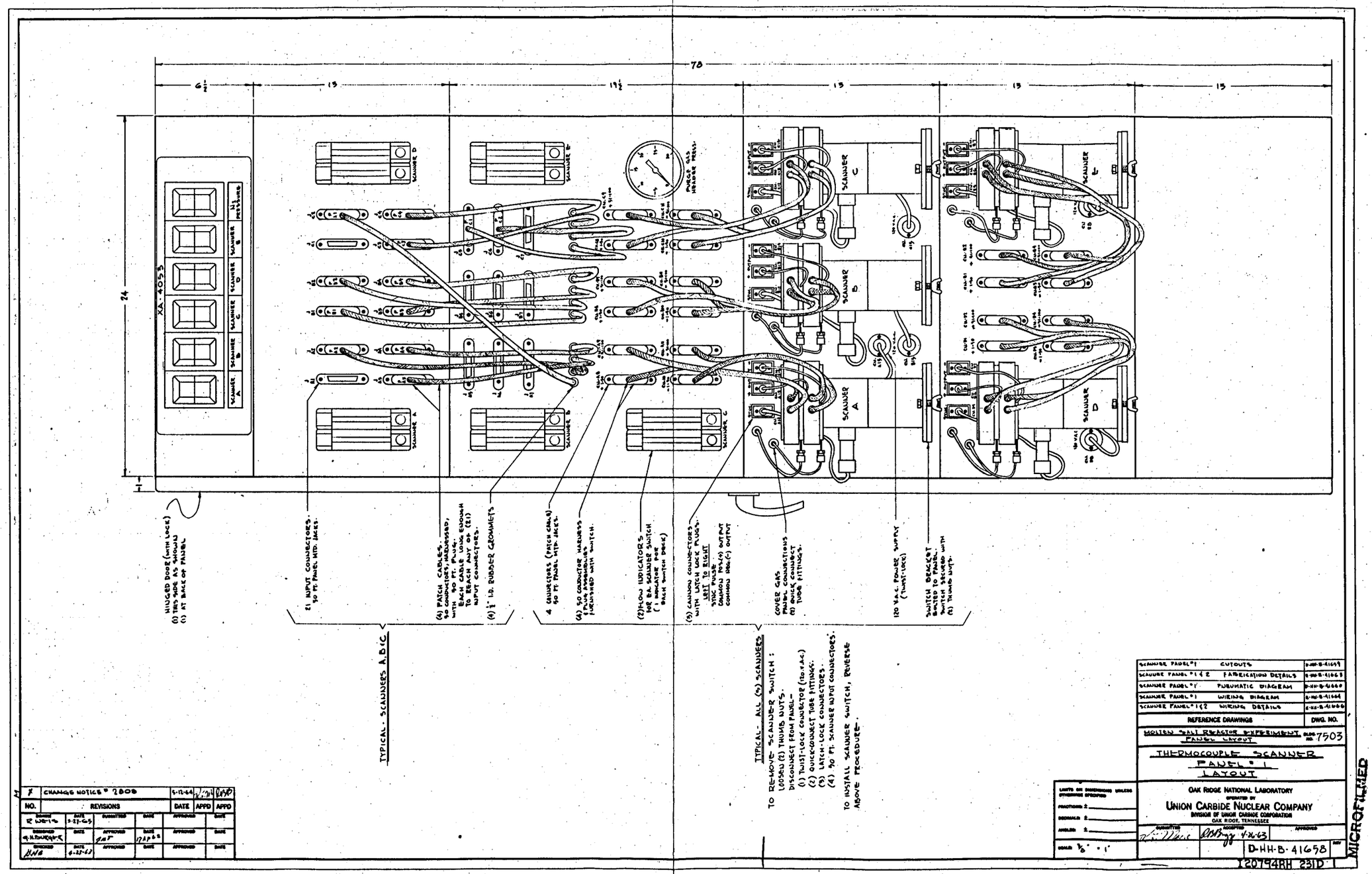


Fig. 6.14.6. MSRE thermocouple scanner. Panel 1 layout.

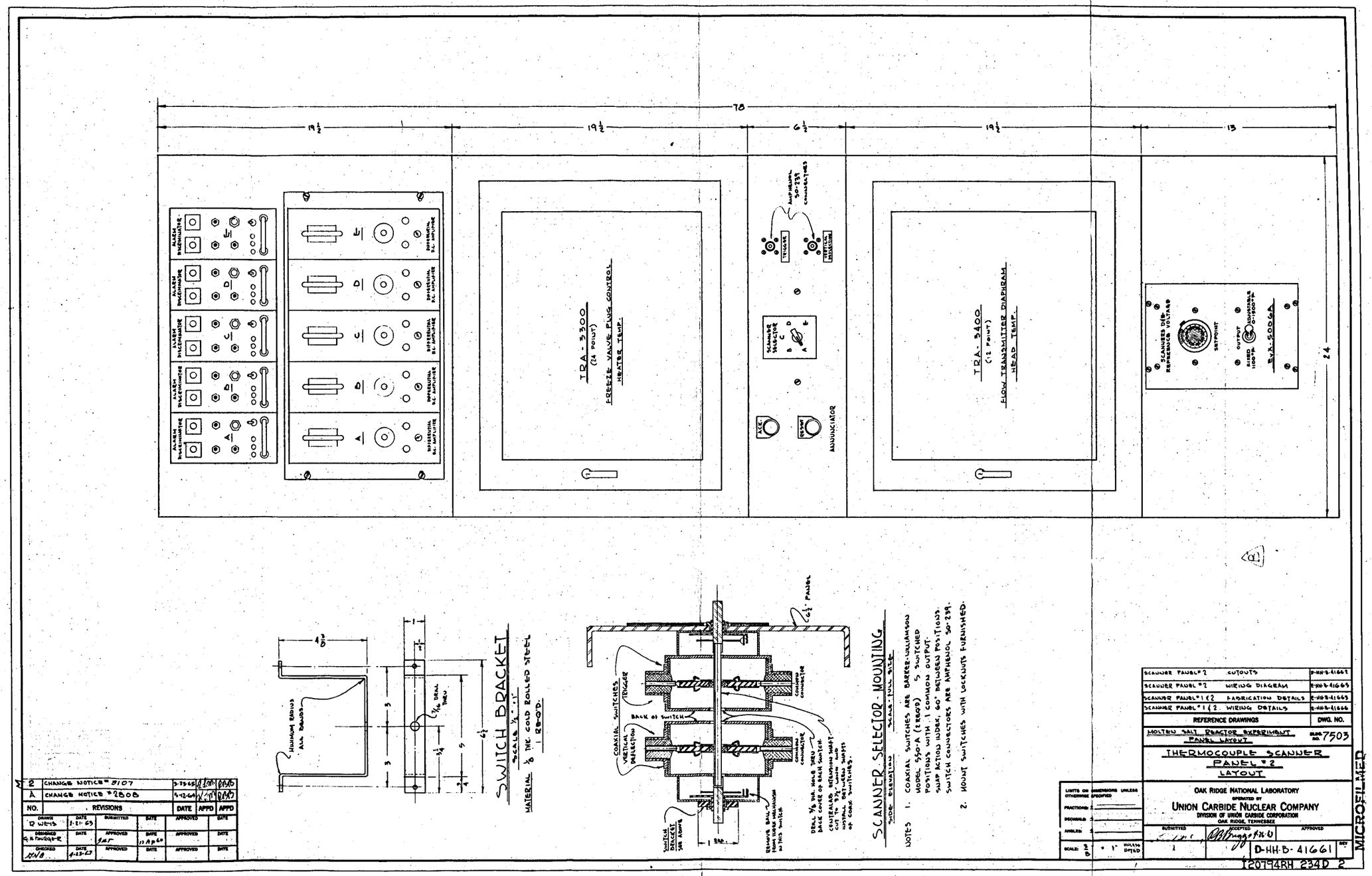


Fig. 6.14.7. MSRE thermocouple scanner. Panel 2 layout.

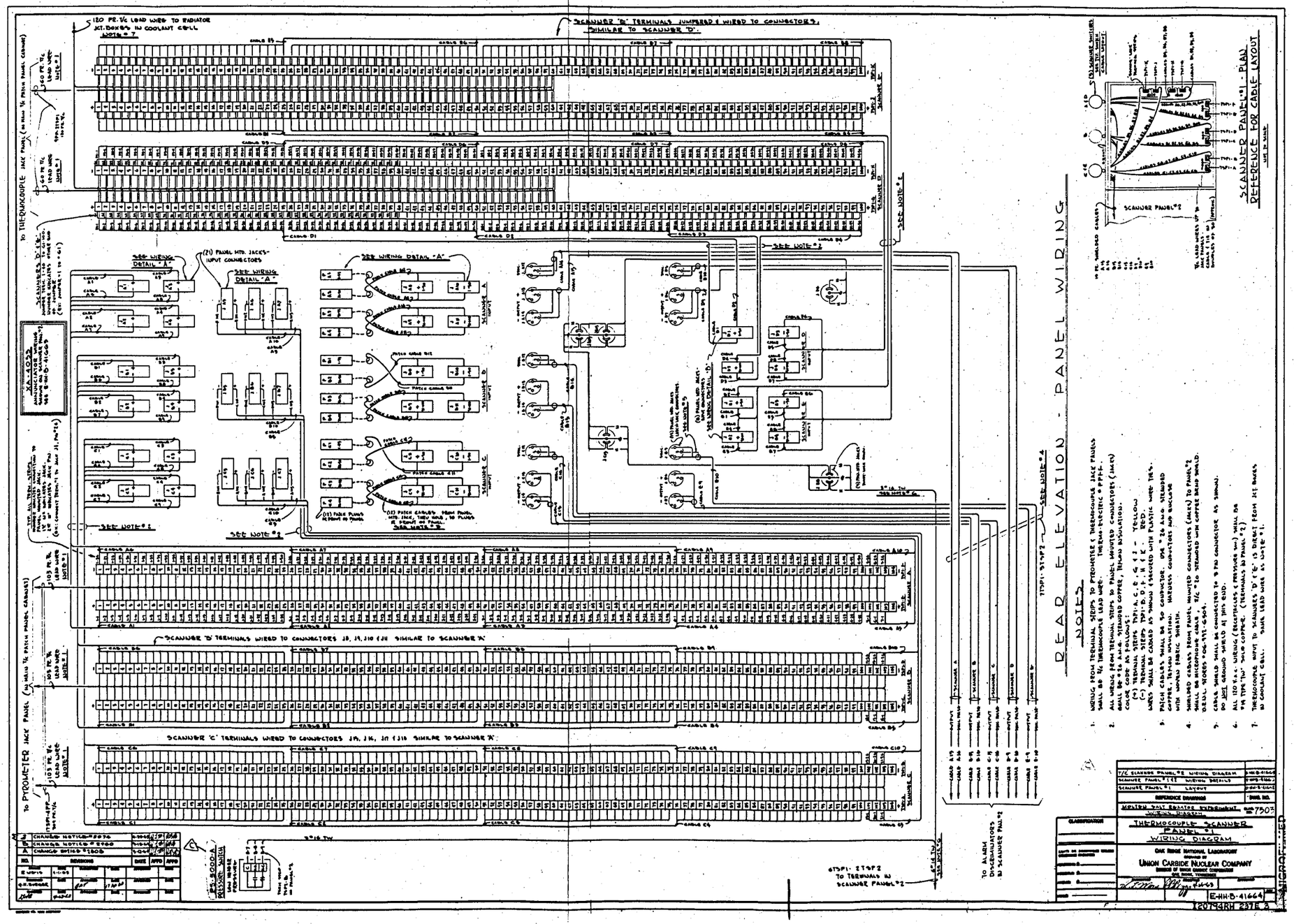


Fig. 6.14.8. MSRE thermocouple scanner. Panel 1 wiring diagram.

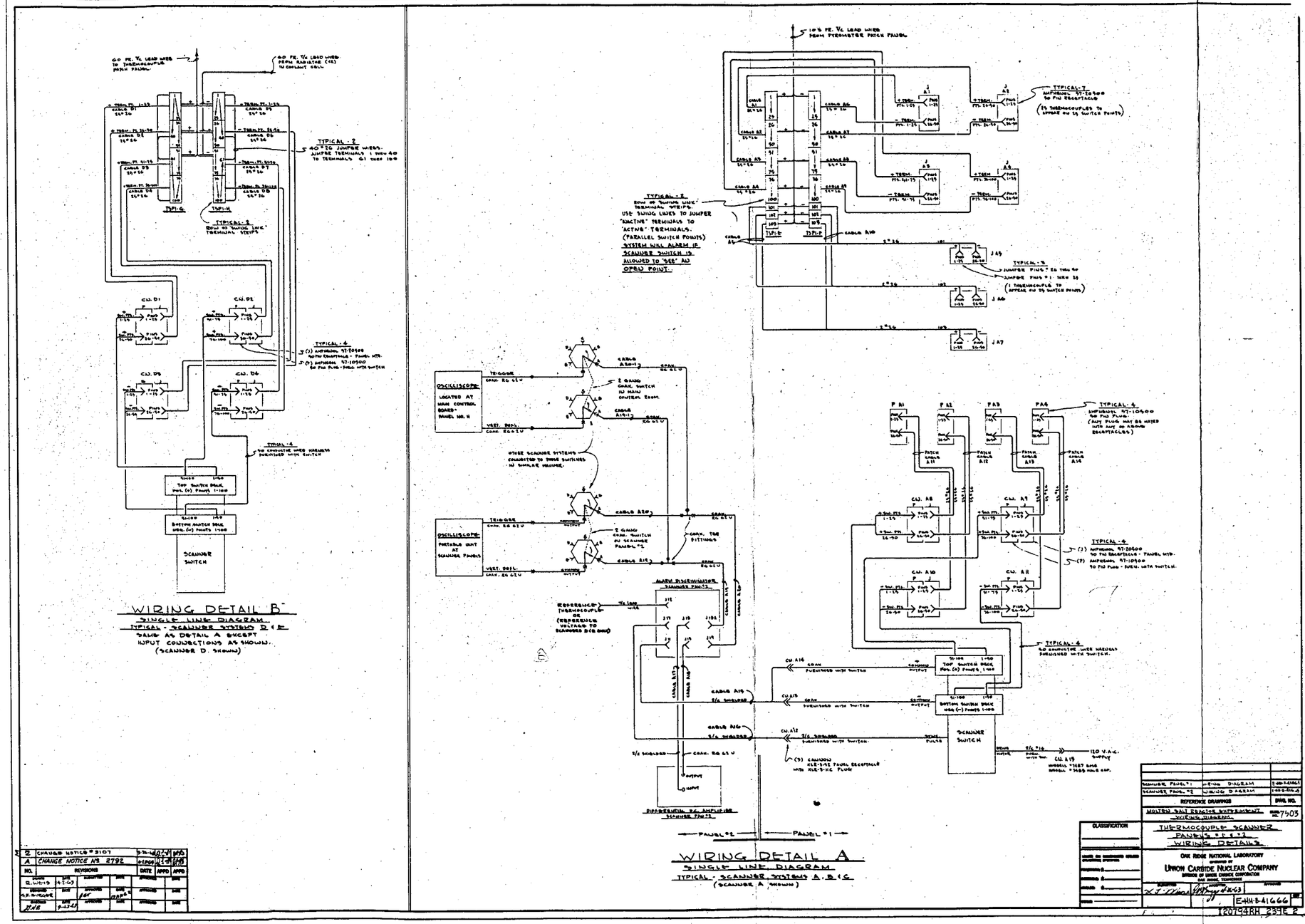


Fig. 6.14.9. MSRE thermocouple scanner. Panels 1 and 2 wiring details.

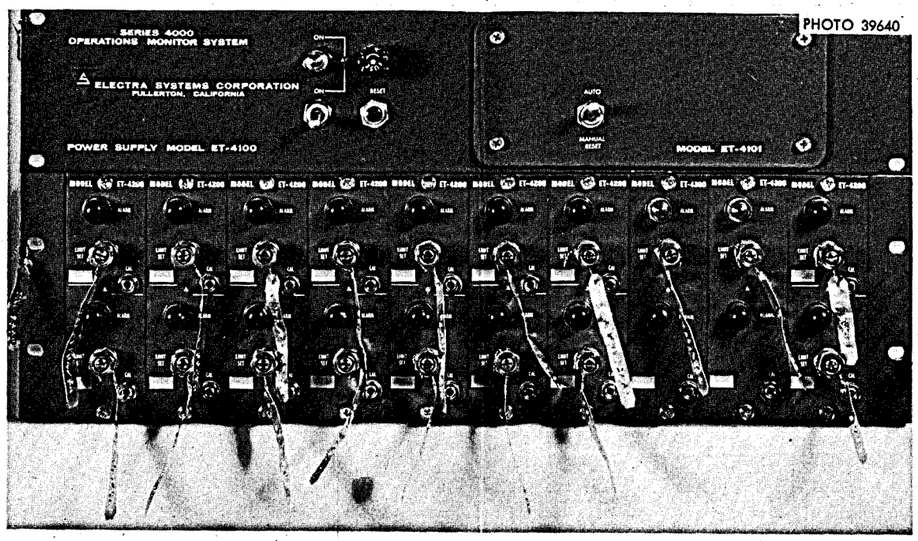


Fig. 6.15.1. Operations monitor system and power supply.

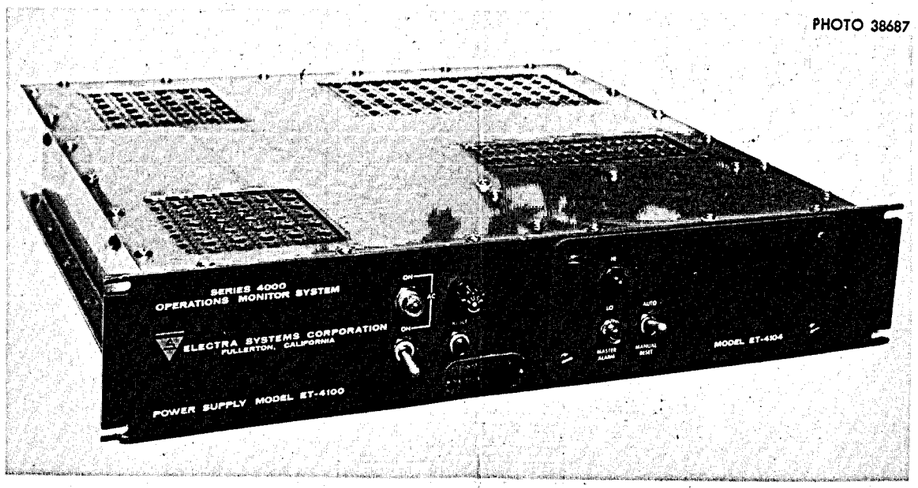


Fig. 6.15.2. Power supply with master alarm.

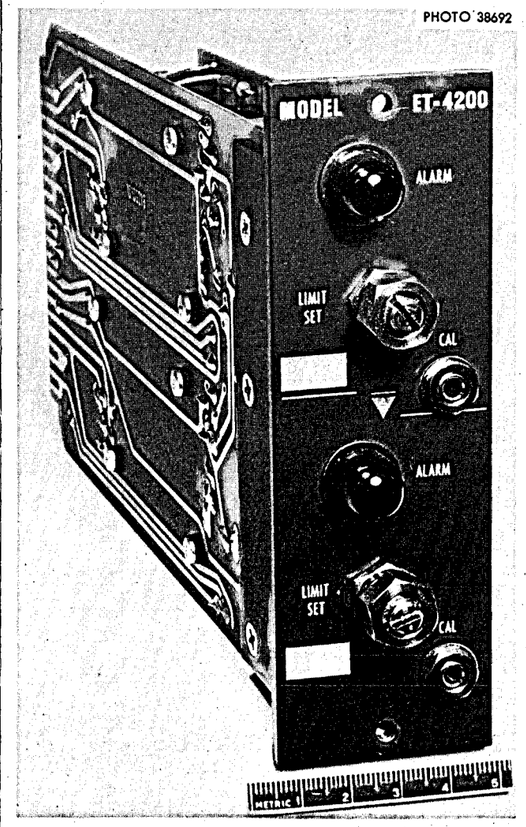


Fig. 6.15.3. Alarm module.


Fig. 6.15.4. Control module.

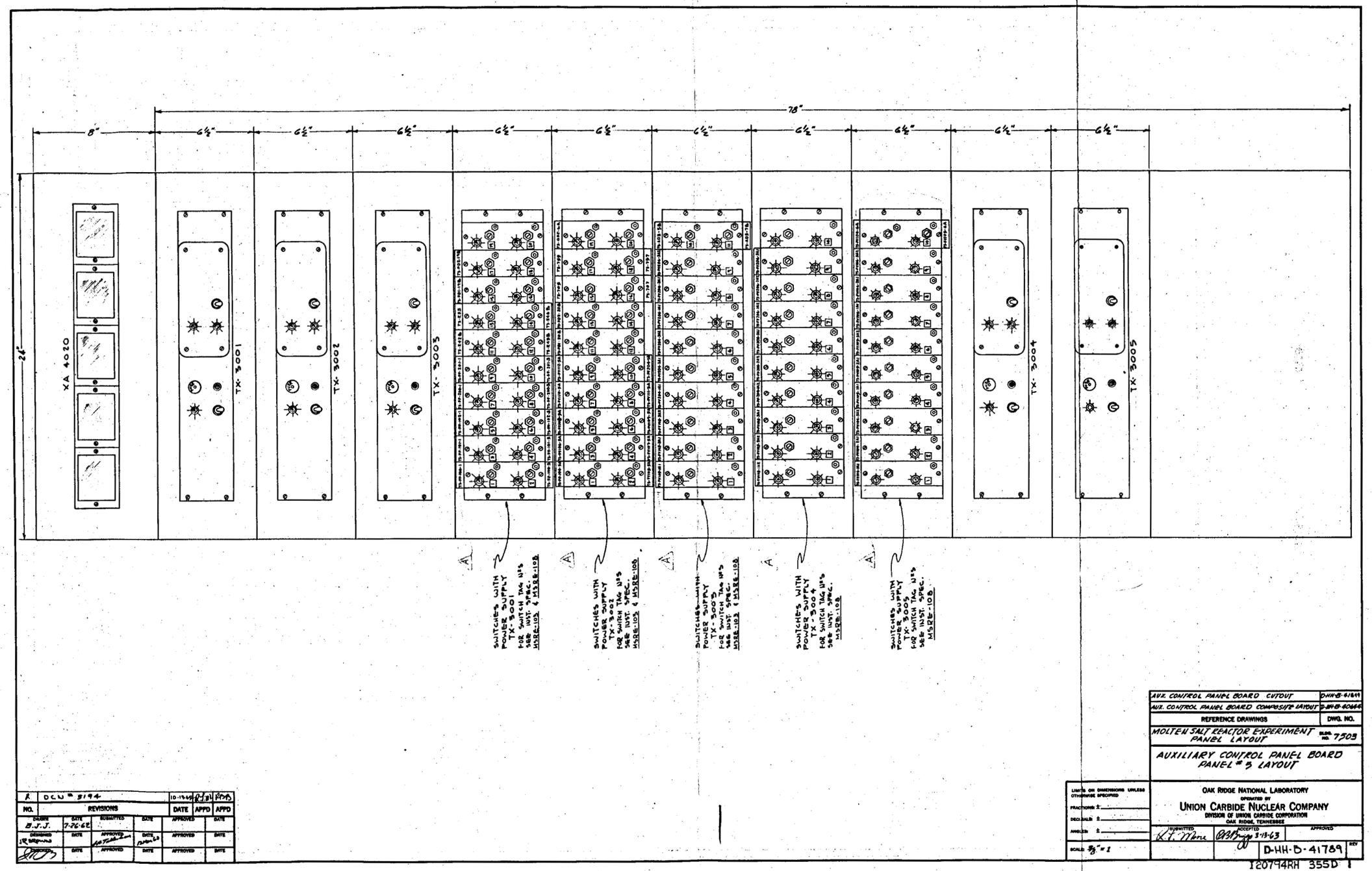


Fig. 6.15.5. MSRE auxiliary control panelboard 5, layout

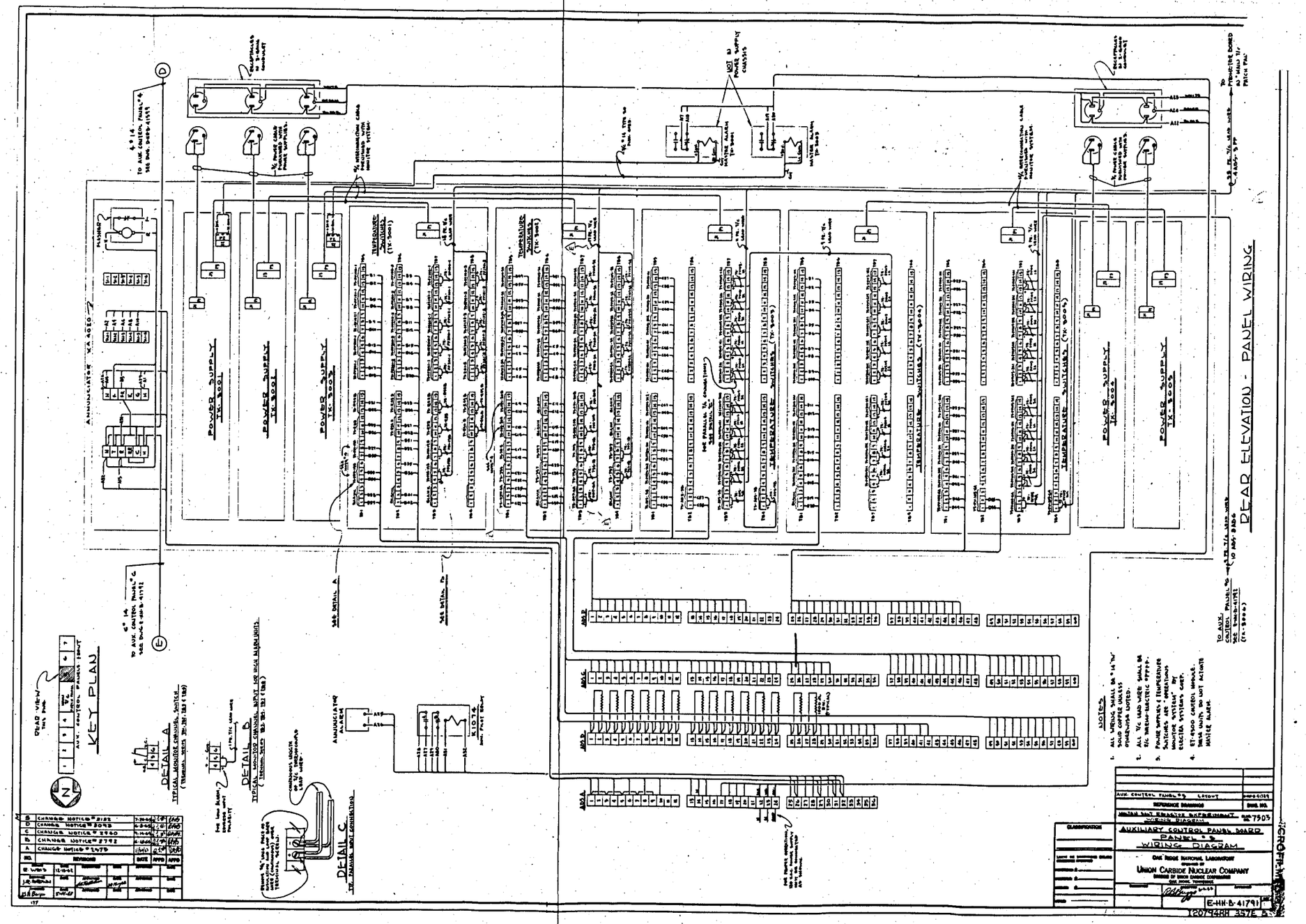


Fig. 6.15.6. MSRE auxiliary control panelboard 5, wiring diagram.

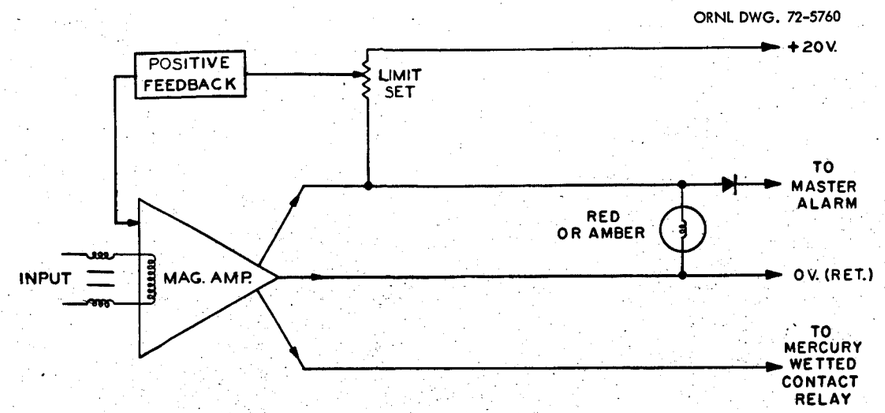


Fig. 6.15.7. Single-limit alarm module ET-4200, block diagram.

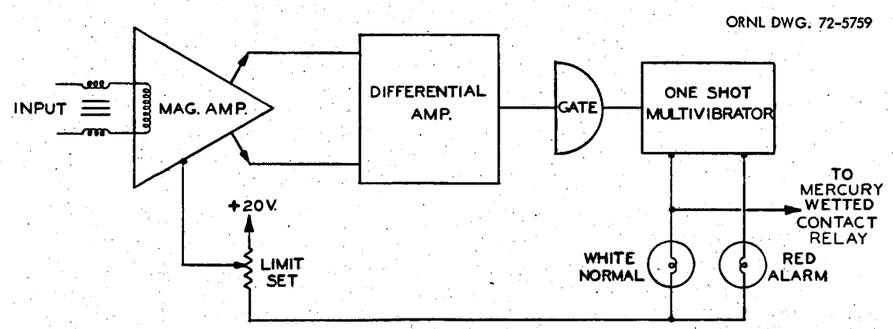


Fig. 6.15.8. Control module ET-4300, block diagram.

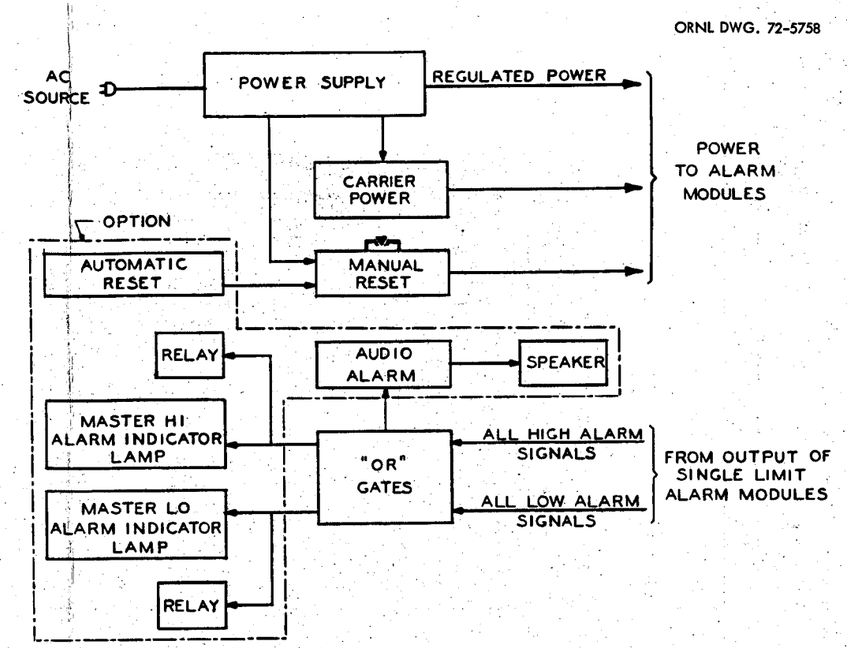


Fig. 6.15.9. Power supply, block diagram.

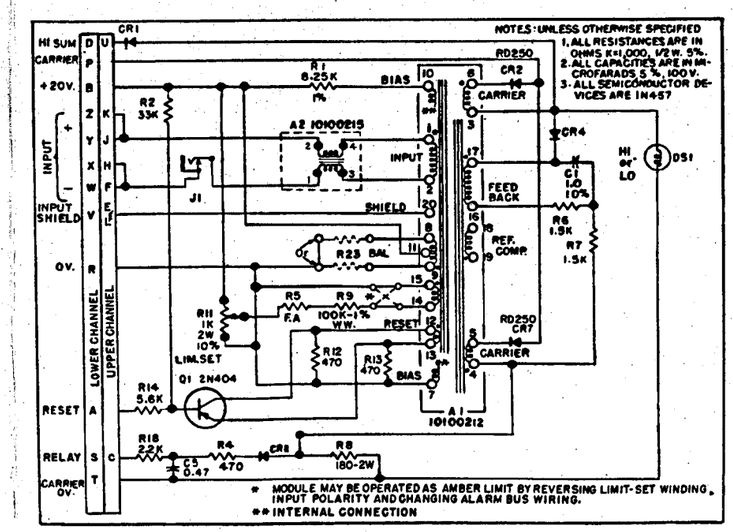


Fig. 6.15.10. Schematic diagram – single-limit alarm module ET-4200.

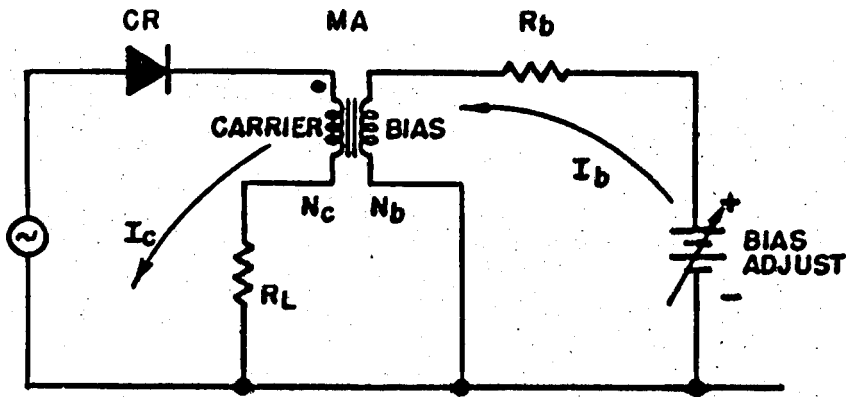


Fig. 6.15.11 Single-core magnetic amplifier.

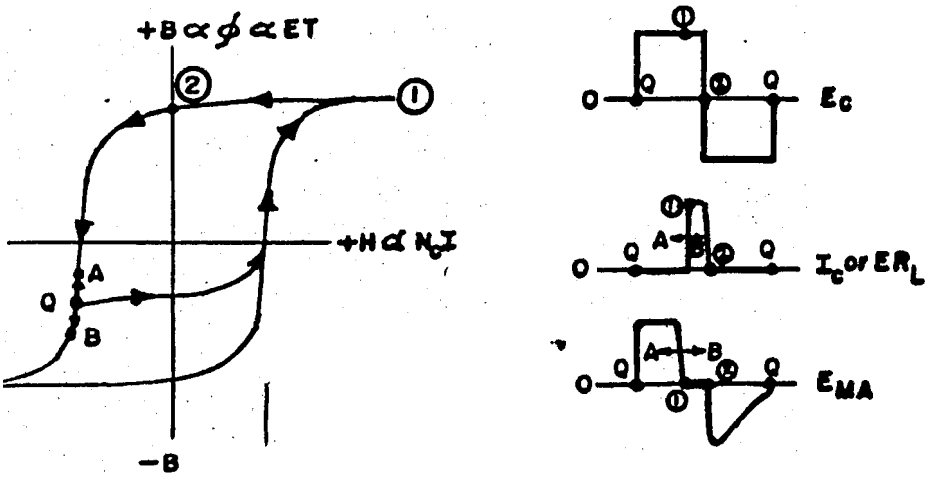


Fig. 6.15.12. Core *B-H* loop and carrier waveforms.

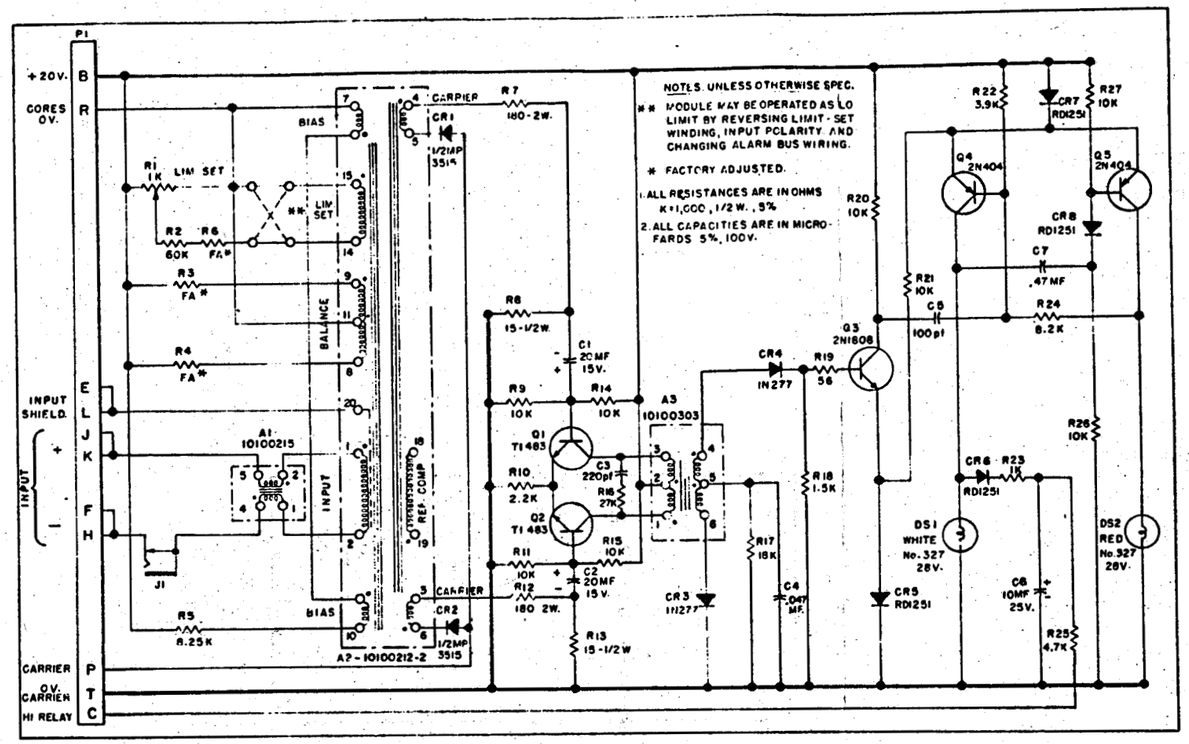


Fig. 6.15.13. Schematic diagram, control module ET-4300.

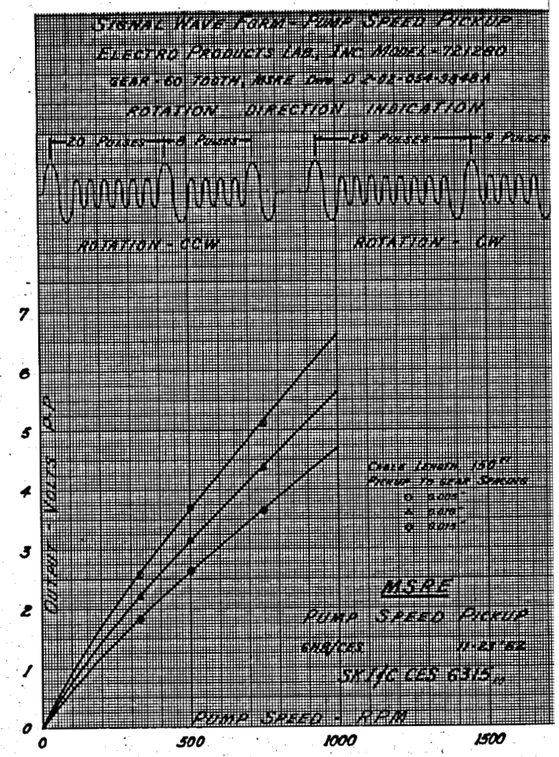


Fig. 6.16.2. Pump speed pickup, signal waveform and output voltage.

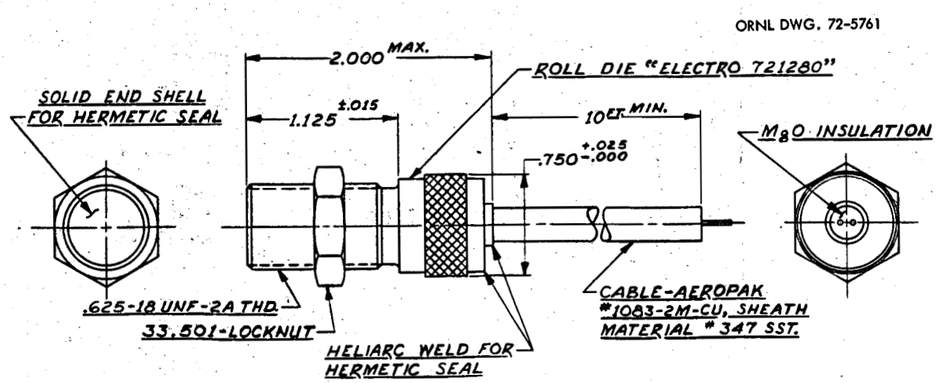


Fig. 6.16.1. Magnetic pickup assembly.

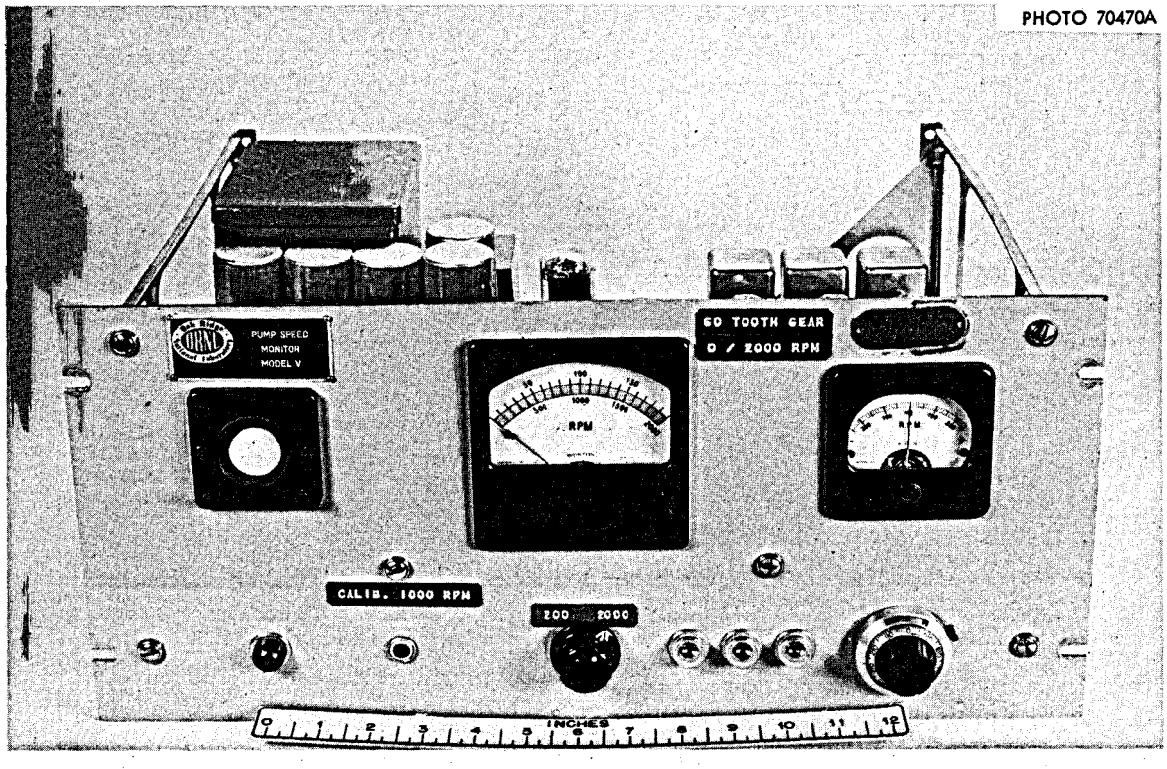


Fig. 6.16.3. Pump speed monitor, Q-1724-27, model VII.

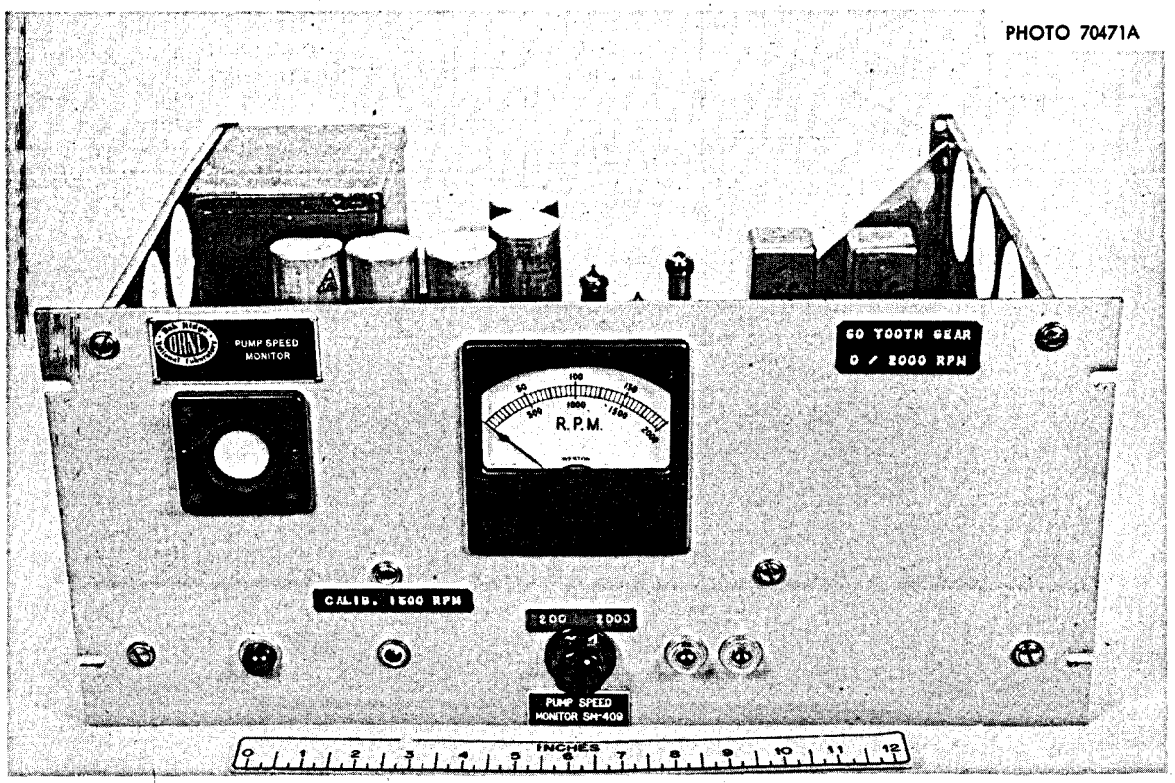


Fig. 6.16.4. Pump speed monitor, Q-172[illegible]-28, model VIII.

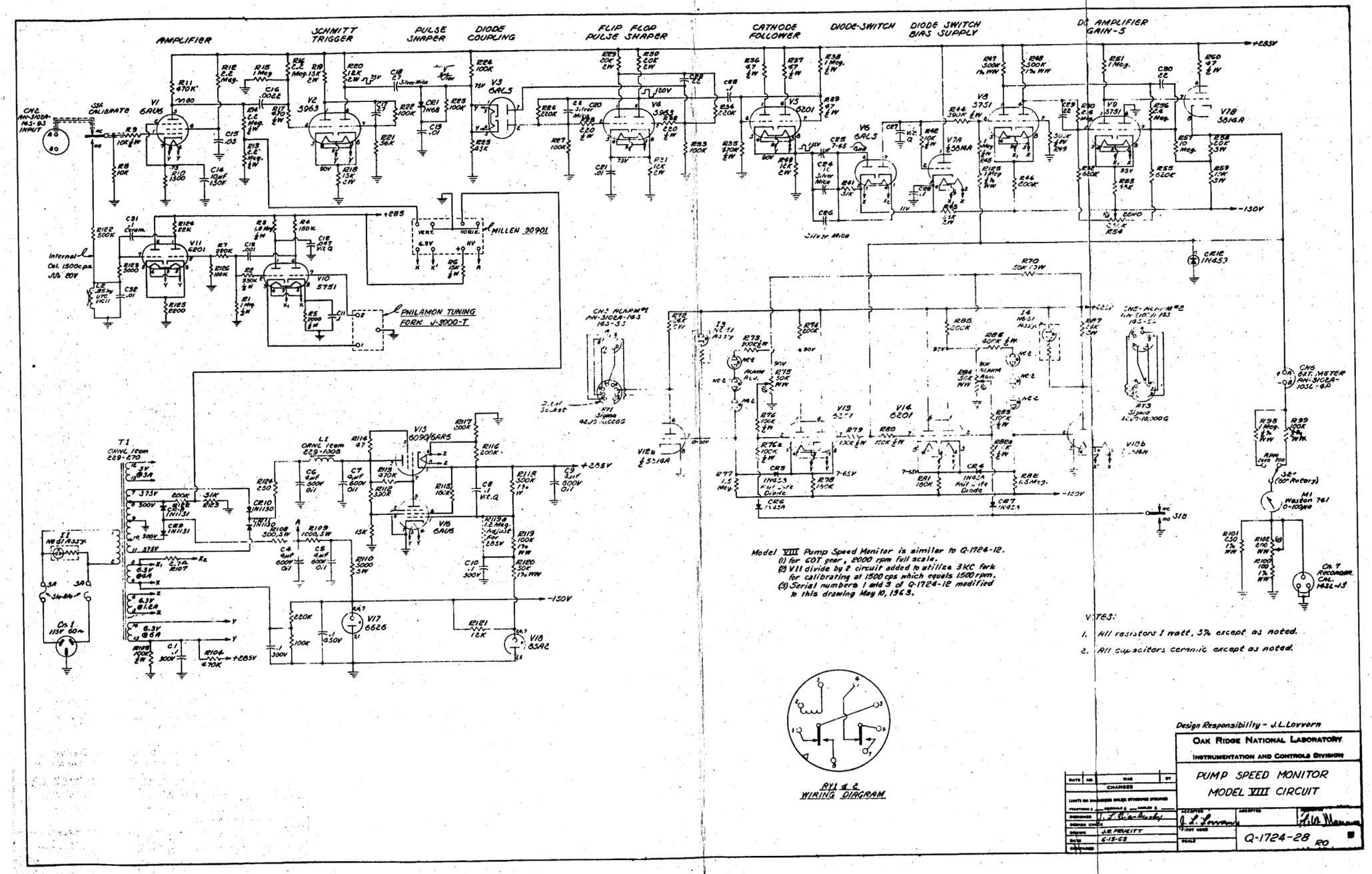


Fig. 6.16.5. Pump speed monitor, model VIII circuit.

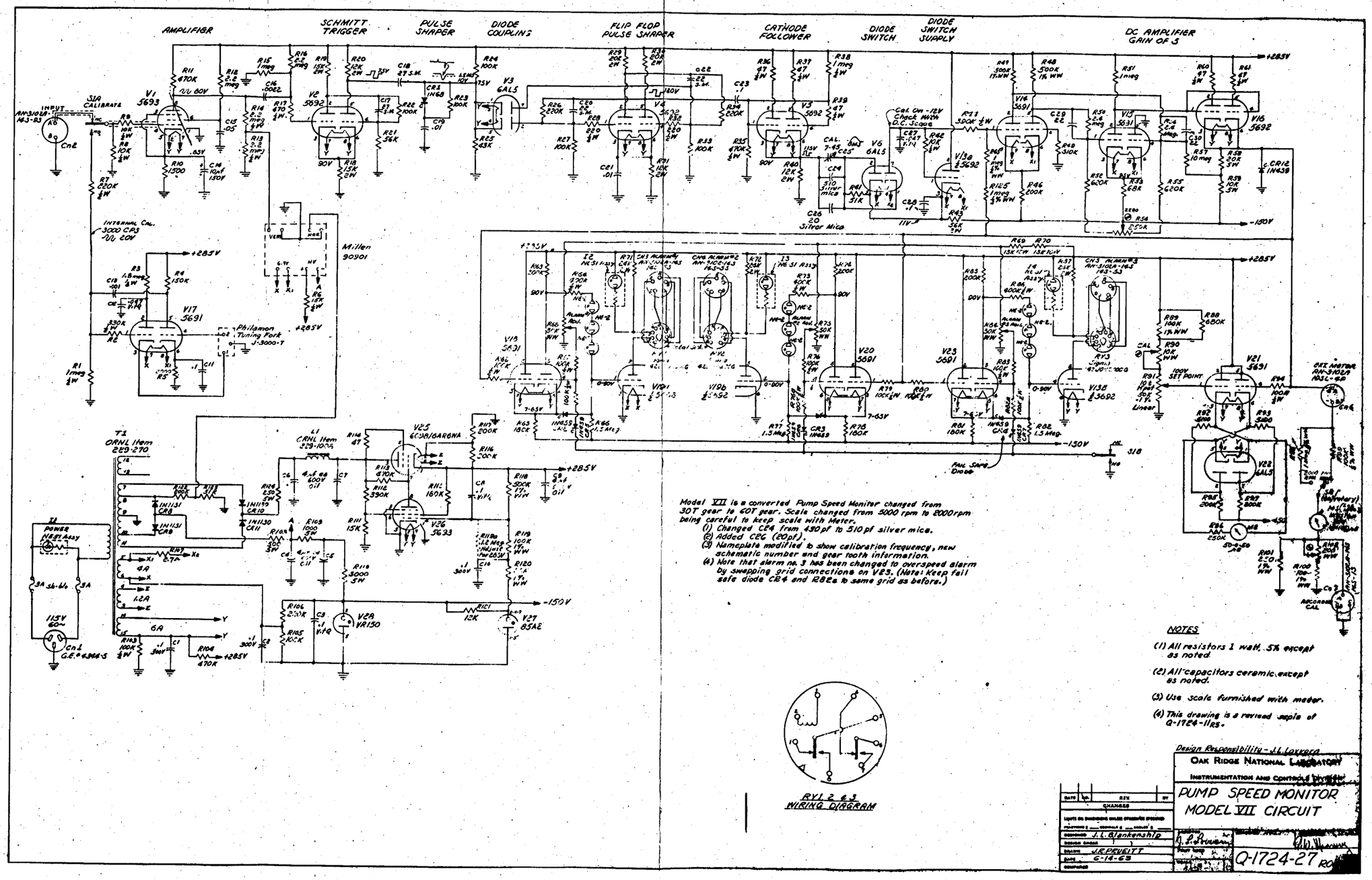


Fig. 6.16.6. Pump speed monitor, model VII circuit.

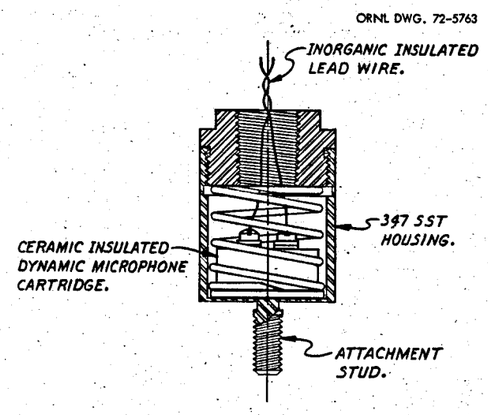


Fig. 6.17.1. Radiation-resistant microphone assembly.

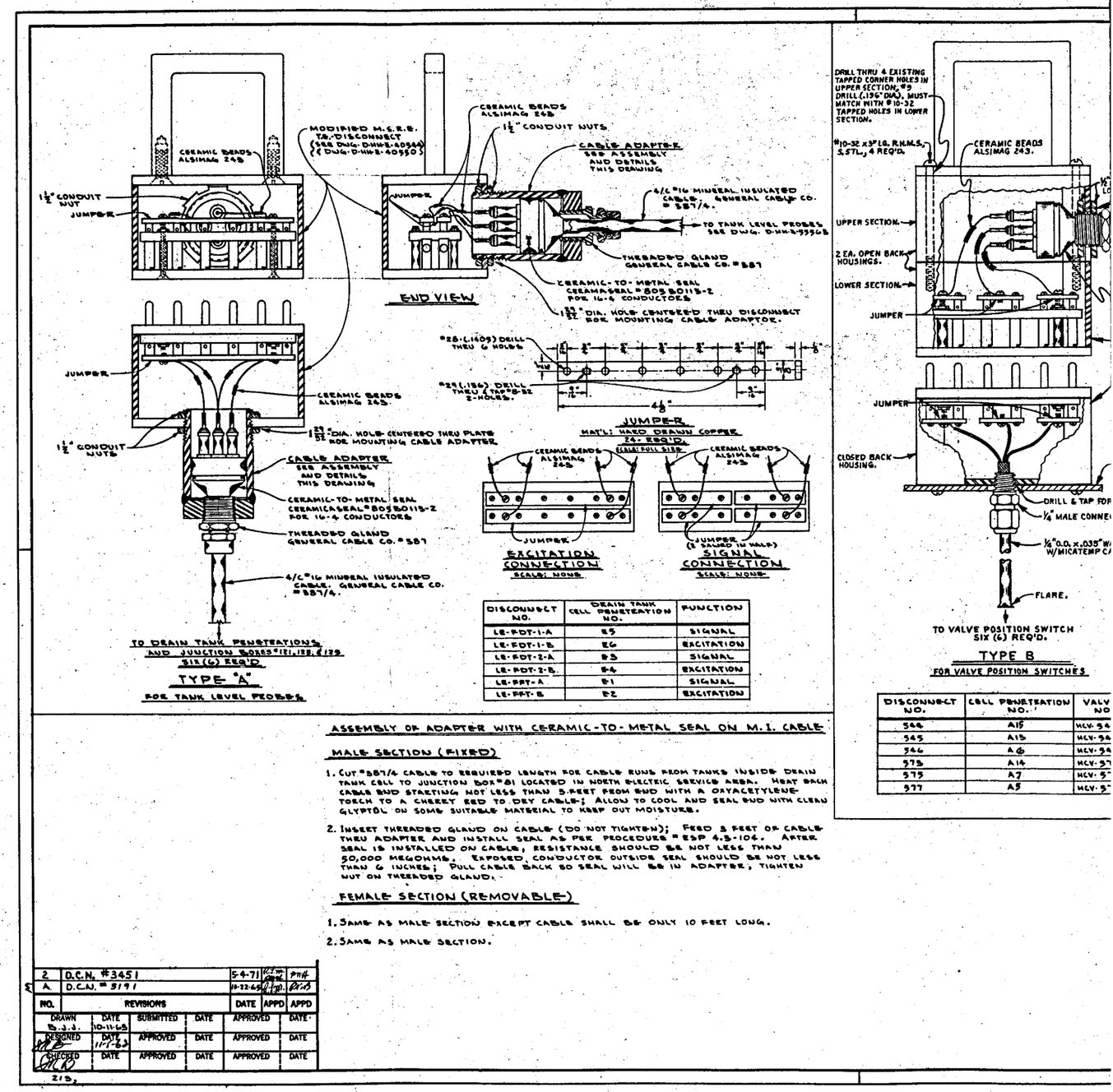


| DISCONNECT NO. | DRAIN TANK CELL PENETRATION NO. | FUNCTION |
|---|---|---|
| LE-FDT-1-A | E5 | SIGNAL |
| LE-FDT-1-B | E6 | EXCITATION |
| LE-FDT-2-A | E3 | SIGNAL |
| LE-FDT-2-B | E4 | EXCITATION |
| LE-FPT-A | E1 | SIGNAL |
| LE-FPT-B | E2 | EXCITATION |

| DISCONNECT NO. | CELL PENETRATION NO. | VALVE NO |
|---|---|---|
| 544 | A15 | HCV-54 |
| 545 | A13 | HCV-54 |
| 546 | A6 | HCV-54 |
| 573 | A14 | HCV-57 |
| 575 | A7 | HCV-57 |
| 577 | A5 | HCV-57 |

Fig. 6.18.1. In-cell electrical instrument circuit disconnect.

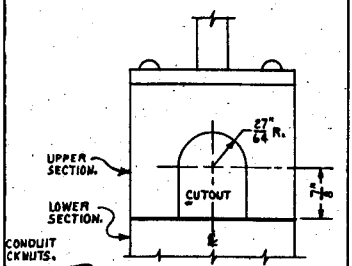


SLOT DETAIL
END VIEW.

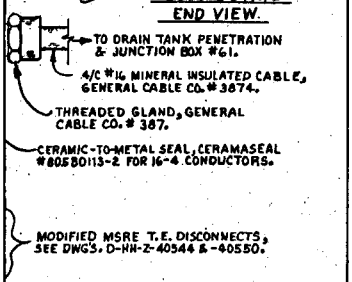


MODIFIED MSRE T.E. DISCONNECTS, SEE DWG'S. D-HH-Z-40544 & -40550.

SUPPORT PLATE ATTACHED TO VALVE.

1/4" IPS THD. CENTERED IN BOTTOM.

TOR, SWAGELOK CAT. # 400-1-4.

ALL COPPER TUBING
BLE, 3/C #22 AWG.

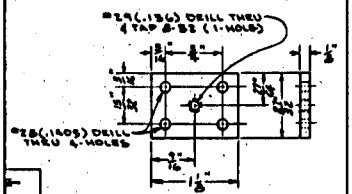


JUMPER
MAT'L: HARD DRAWN COPPER
36-REQ'D
SCALE: FULL SIZE

| | |
|---|---|
| 5A | |
| 5A | |
| 6A | |
| 3A | |
| 5A | |
| 7A | |

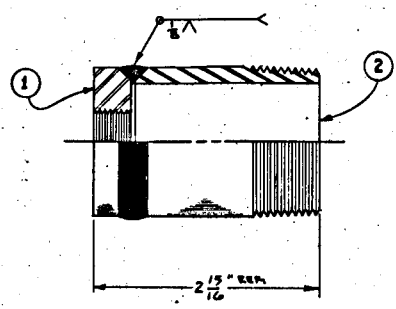


CABLE ADAPTER
ASSEMBLY
SCALE: FULL SIZE

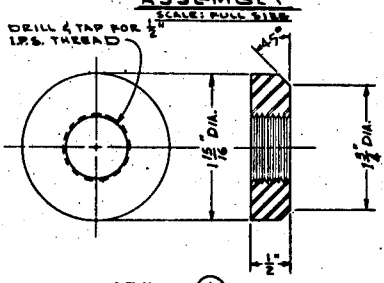


ITEM-1
MAT'L: ALUMINUM, TYPE 6061
12-REQ'D
SCALE: FULL SIZE

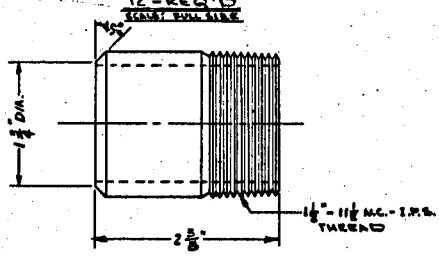


ITEM-2
MAT'L: 1 1/2" ALUMINUM PIPE NIPPLE
12-REQ'D
SCALE: FULL SIZE

NOTE:

CLEAN CABLE ADAPTER AFTER WELDING TO REMOVE OXIDE AND FLUX.

| REFERENCE DRAWINGS | NO. |
|---|---|
| DRAIN TANK LEVEL INDICATORS CABLE ROUTING | D-HH-Z-55592 |
| DRAIN TANK LEVEL INDICATORS HEAD COVER DETAILS | D-HH-Z-55568 |
| MULTIPLE THERMOCOUPLE DISCONNECT ASS'Y. & TYP. WIRING | D-HH-Z-40550 |
| THERMOCOUPLE DISCONNECT HOUSING ASSY & DETAILS | D-HH-Z-40544 |

OAK RIDGE NATIONAL LABORATORY
OPERATED BY
UNION CARBIDE NUCLEAR COMPANY
DIVISION OF UNION CARBIDE CORPORATION
OAK RIDGE, TENNESSEE

MOLTEN SALT REACTOR EXPERIMENT DISCONNECTS — BLDG. NO. 7503

AUXILIARY DISCONNECT FOR REACTOR & DRAIN TANK DETAILS

| SUBMITTED | APPROVED | APPROVED |
|---|---|---|
| | | |
| APPROVED | D-HH Z 41657 D | REV. |

LIMITS ON DIMENSIONS UNLESS OTHERWISE SPECIFIED:
FRACTIONS ± 1/64"
DECIMALS ±
ANGLES ± 1°
SCALE: 3/4" = 1" UNLESS NOTED

MICROFILMED

I20794RH 210D 2

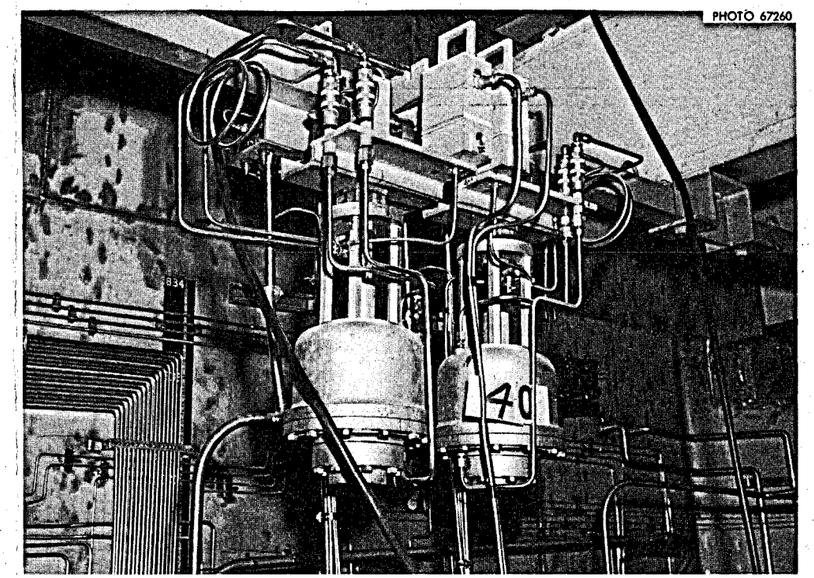


Fig. 6.18.2. Typical in-cell valve installation with air line and electrical disconnects.

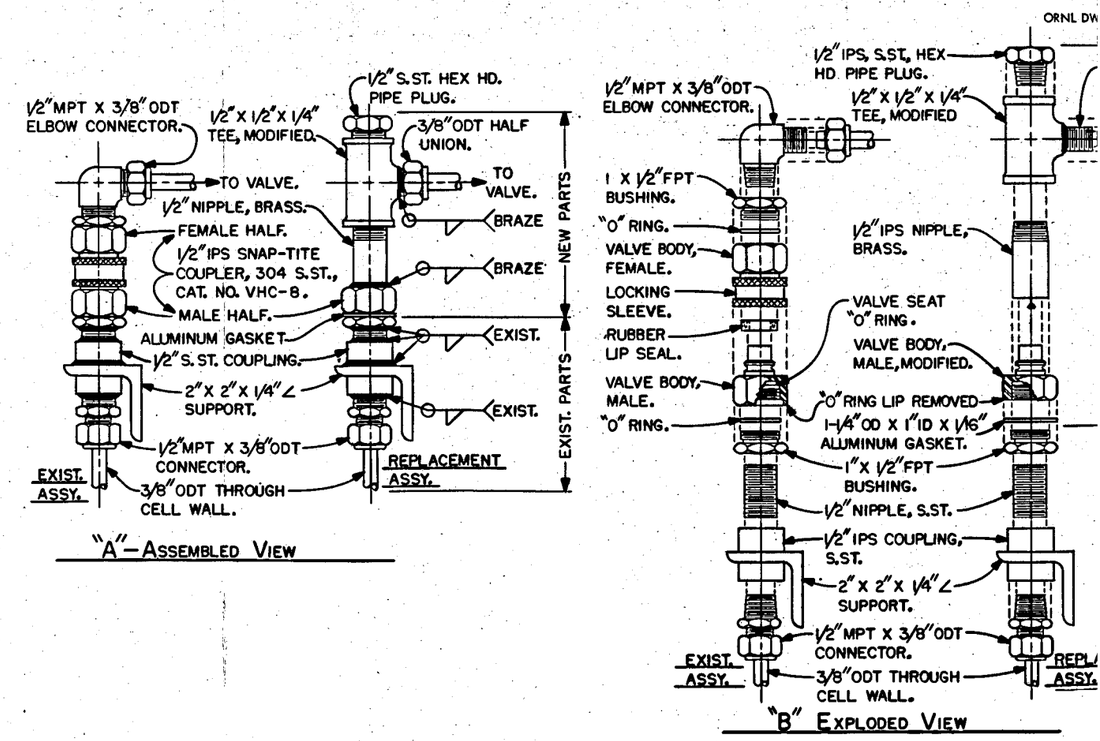


Fig. 6.18.3. MSRE valve air line disconnect, assembly.

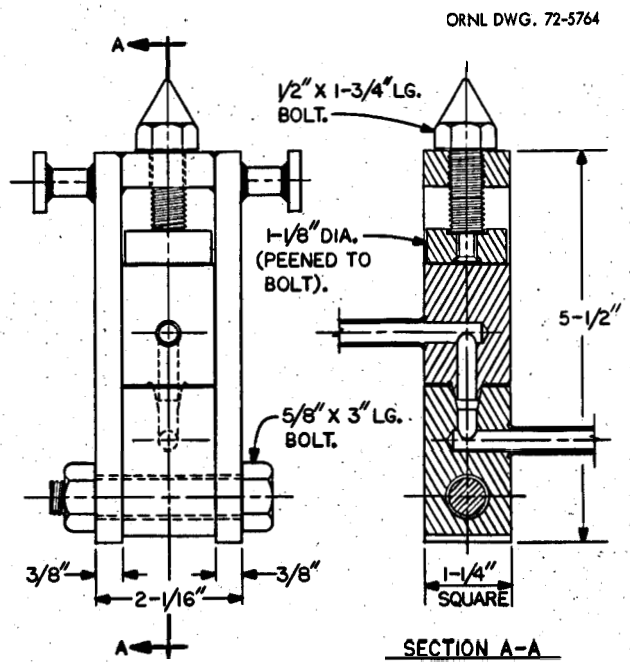


Fig. 6.18.4. Weigh cell air line disconnect.

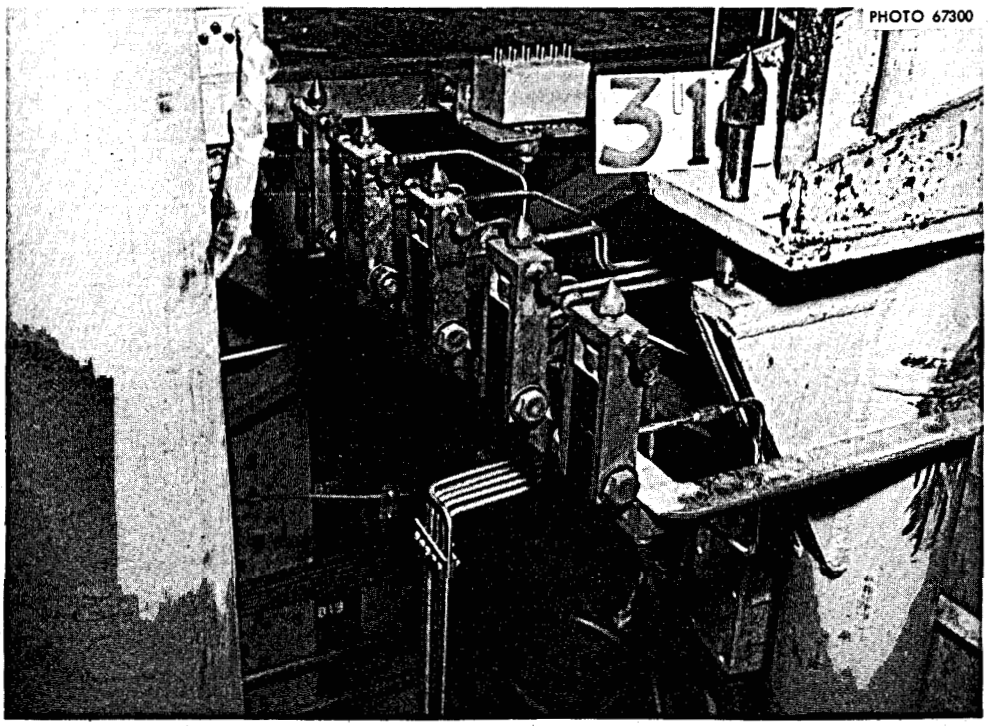


Fig. 6.18.5. Typical installation of disconnects in air line to drain tank weigh cells.

ORNL DWG. 72-5765

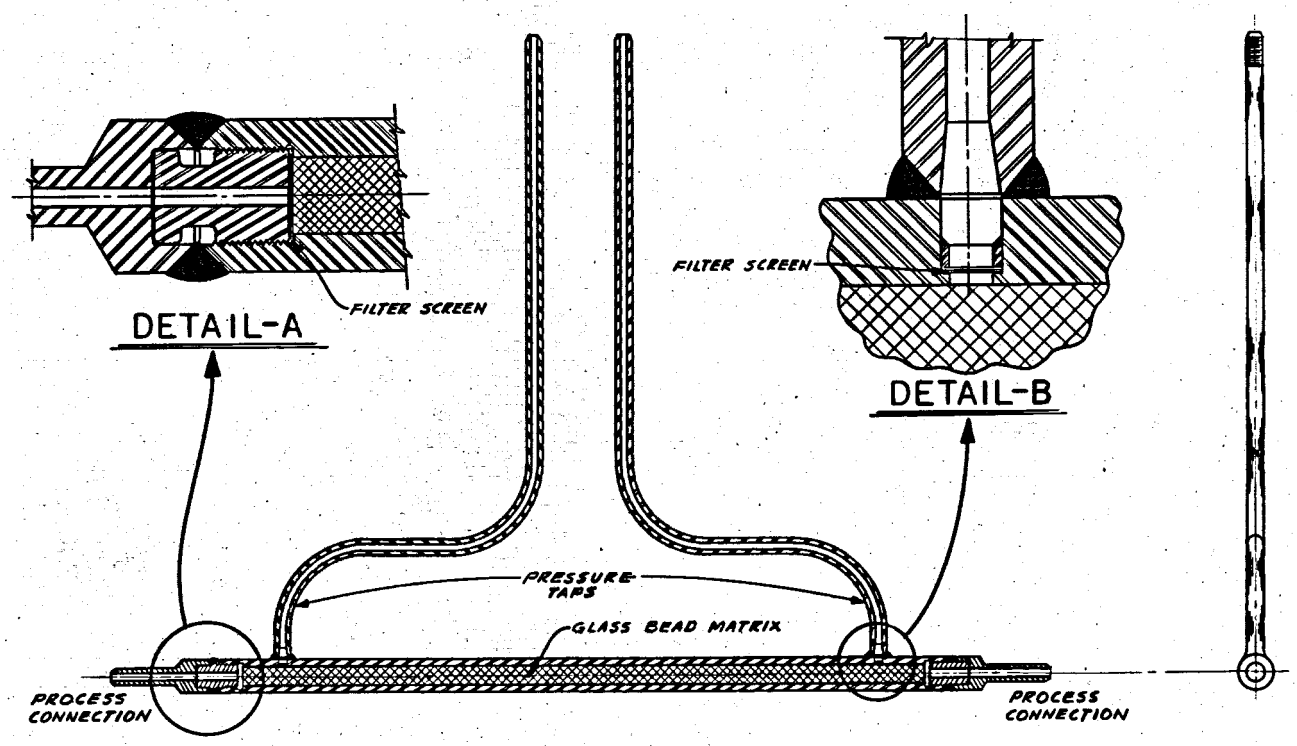


Fig. 6.19.1. Matrix-type flow element.

ORNL DWG. 72-5766

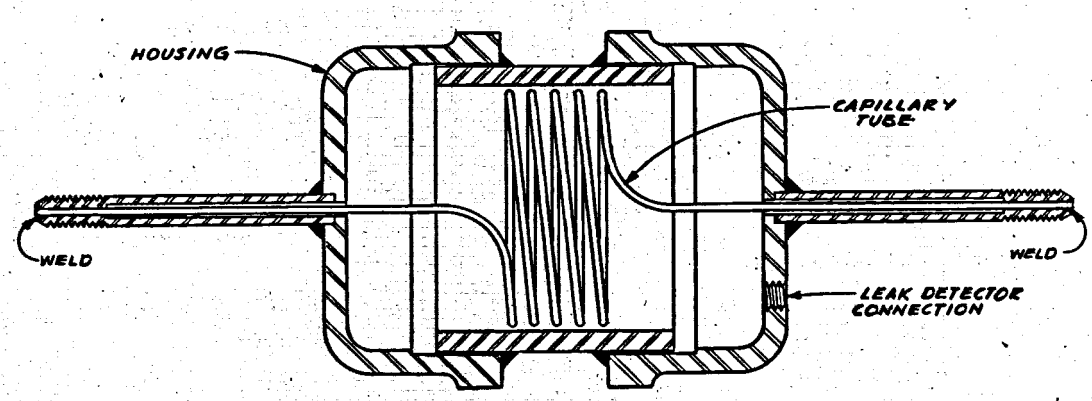


Fig. 6.19.2. Capillary flow restrictor.

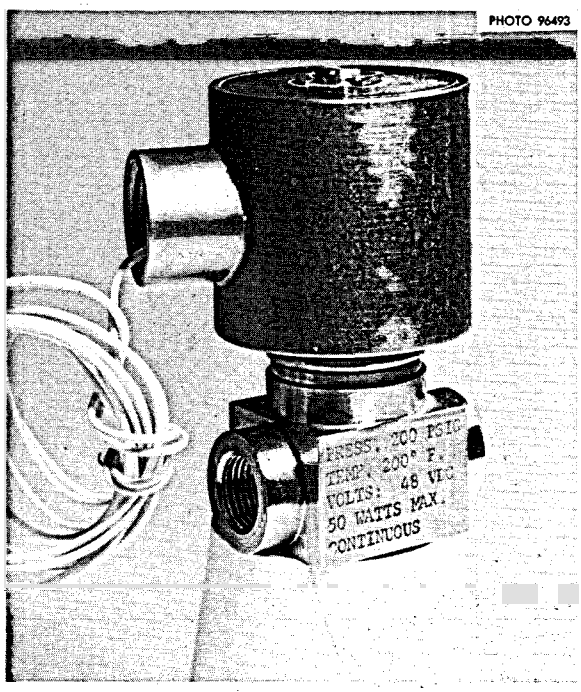


Fig. 6.20.1*A*. Weld-sealed electric solenoid valve, type I.

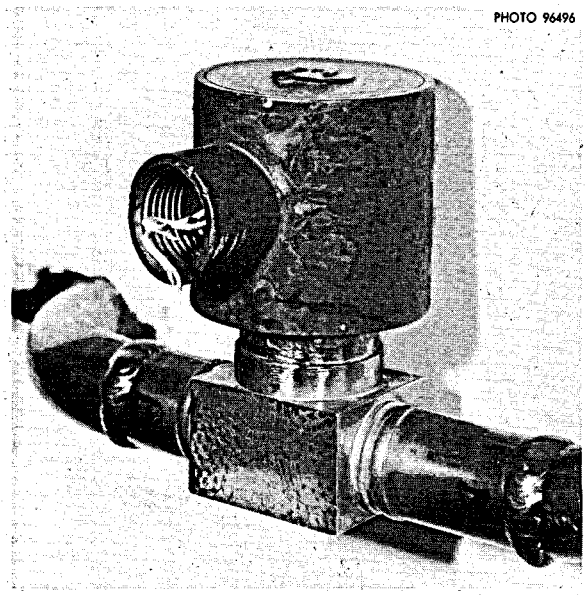


Fig. 6.20.1*B*. Weld-sealed electric solenoid valve, type II.

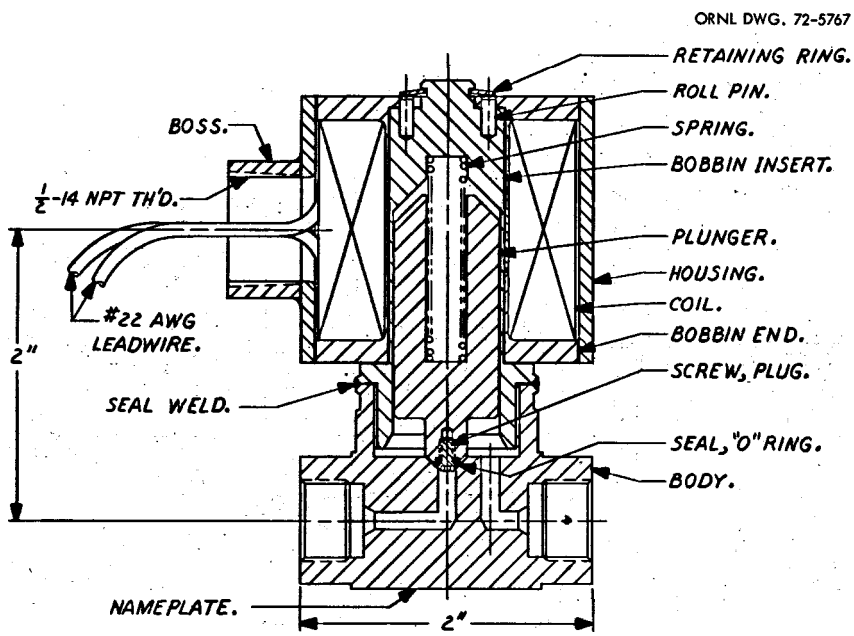


Fig. 6.20.2. Weld-sealed electric solenoid valve, type I – sketch.

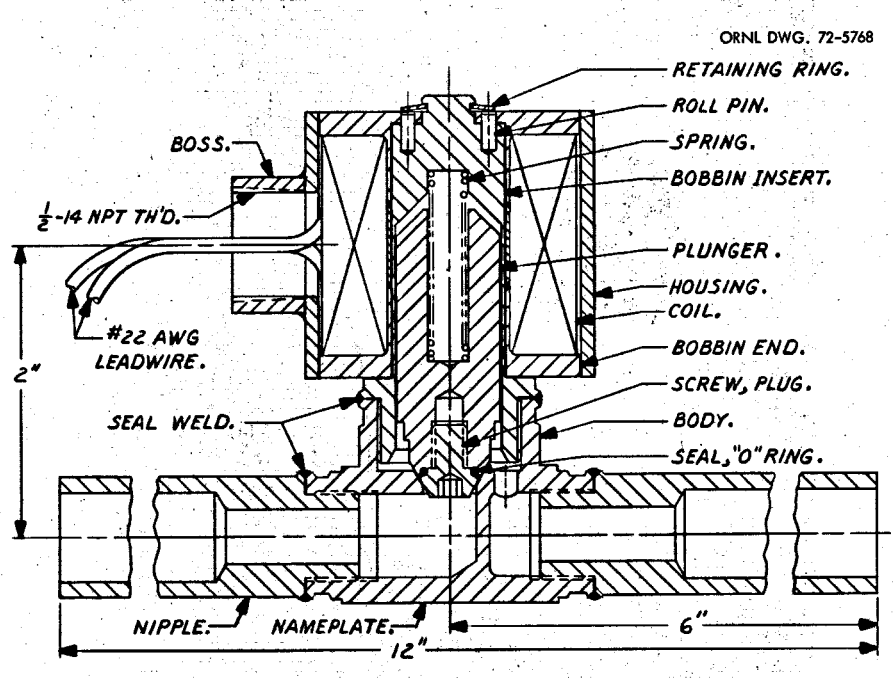


Fig. 6.20.3. Weld-sealed electric solenoid valve, type II – sketch.

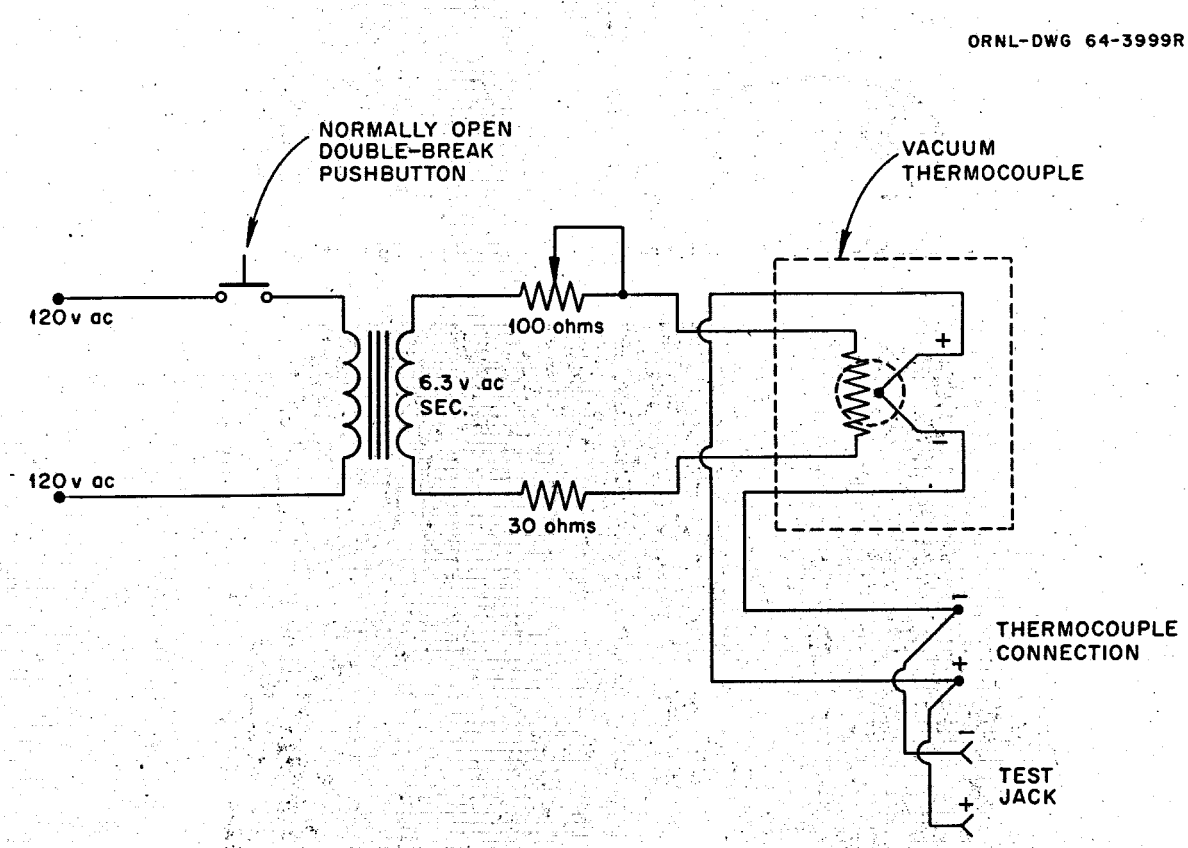


Fig. 6.21.1. Thermocouple test assembly for temperature safety channel.

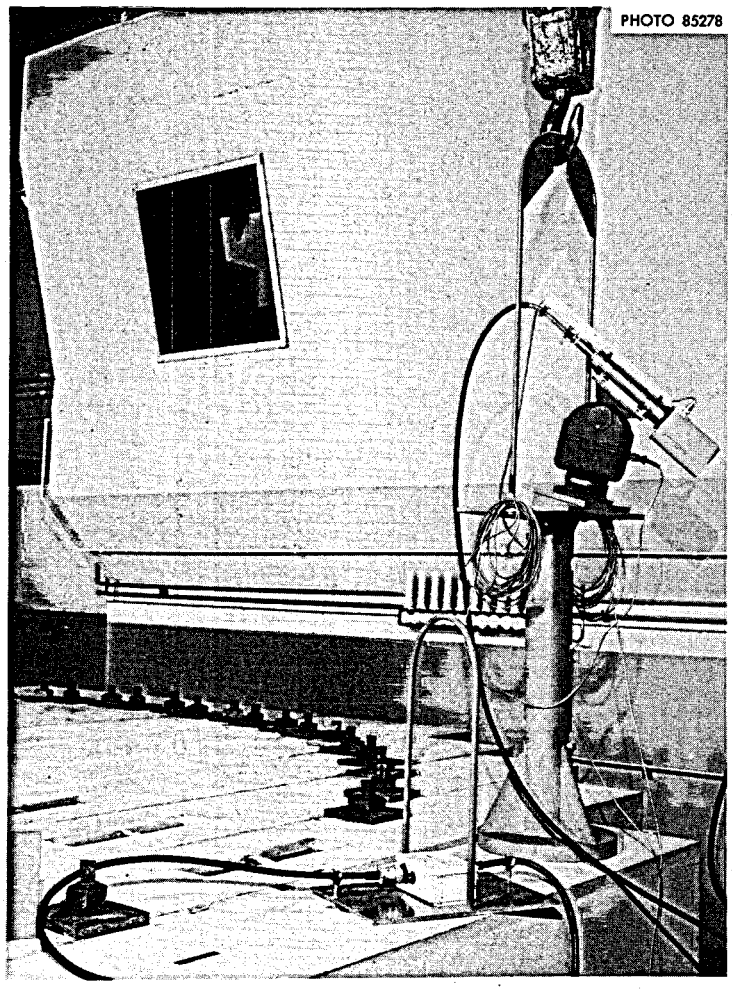


Fig. 6.22.1. MSRE closed circuit TV – camera and preamp assembly.

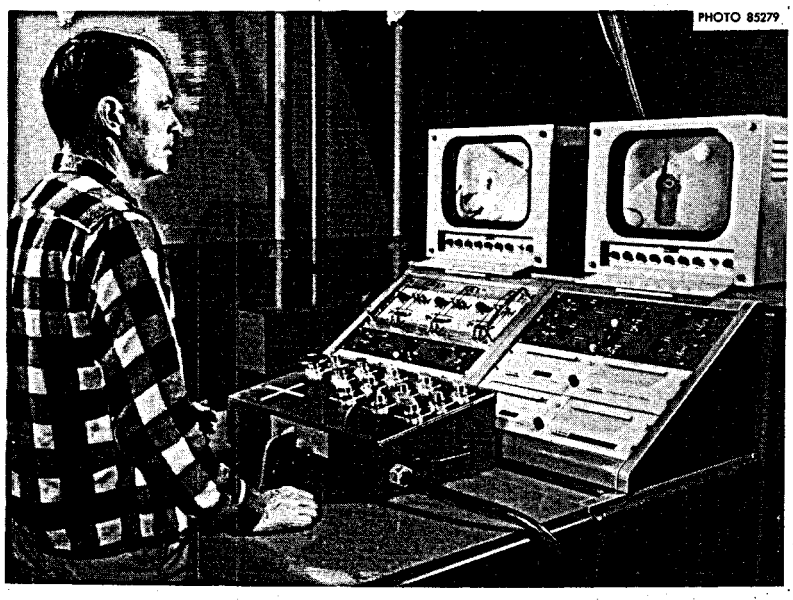


Fig. 6.22.2. MSRE closed circuit TV – console assembly.

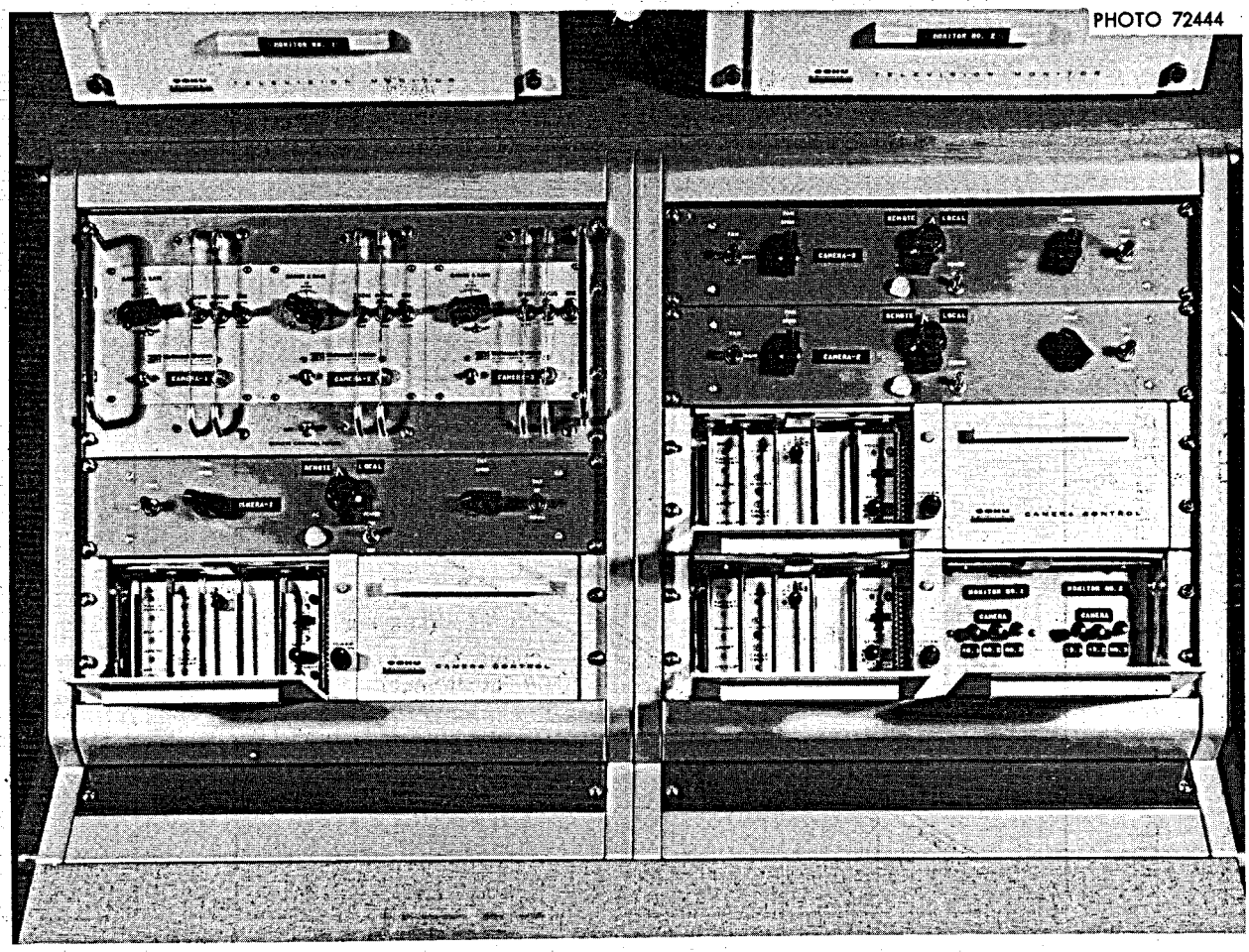


Fig. 6.22.3. MSRE closed circuit TV – console panel.

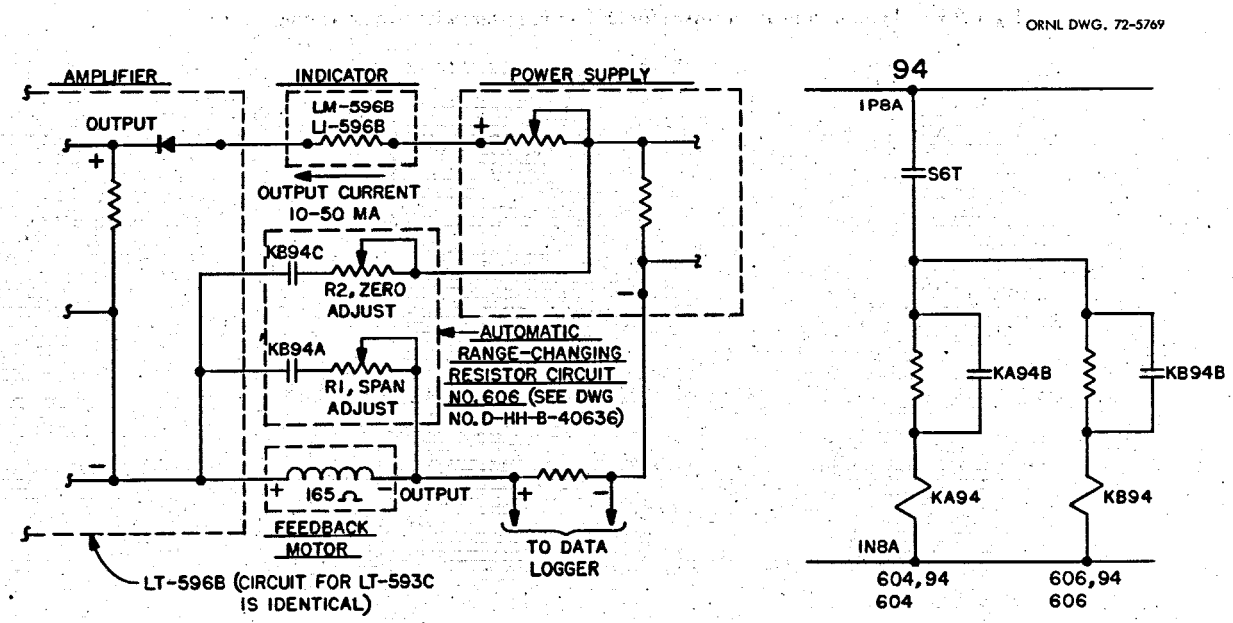


Fig. 6.23.1. Fuel pump level transmitter with range-change circuit.

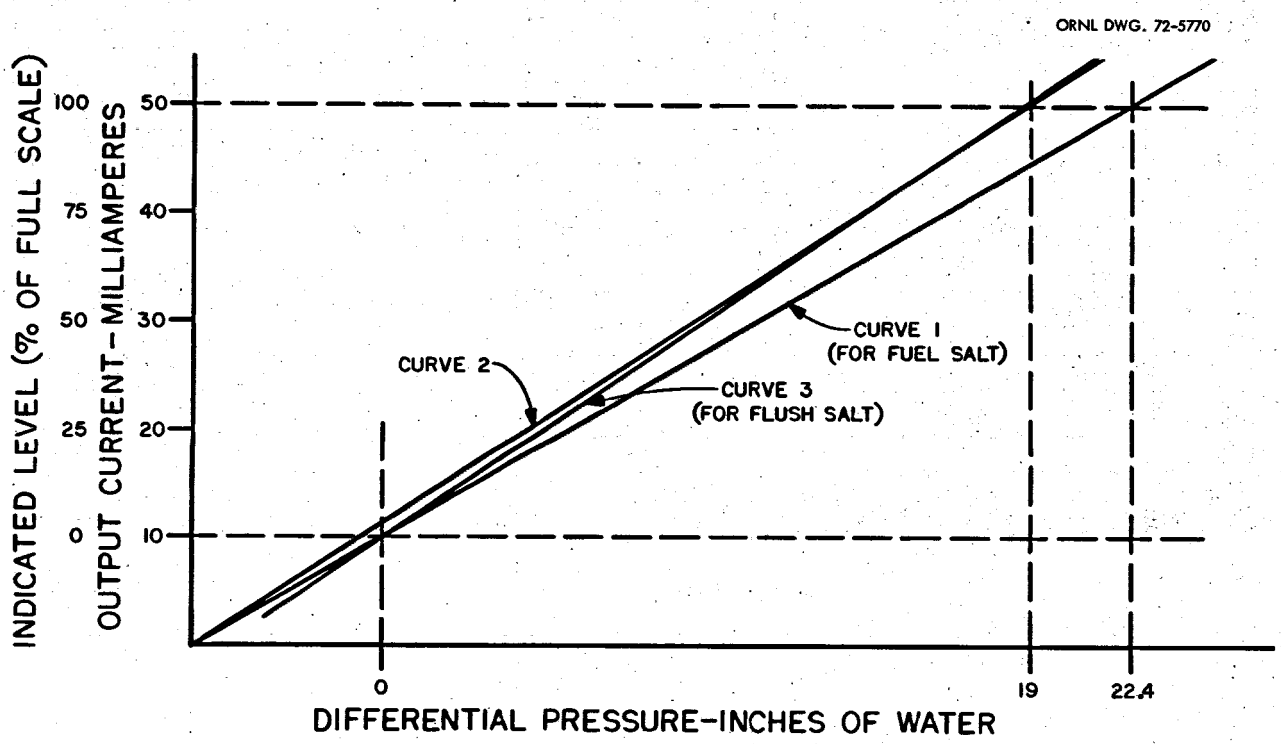


**Fig. 6.23.2. Typical calibration curves for level transmitters with two measuring ranges.**

# 7. CODING SYSTEMS AND INSTALLATION PRACTICES

T. M. Cate P. G. Herndon

## 7.1 INSTRUMENT NUMBER AND APPLICATIONS DIAGRAM CODING SYSTEMS

The instrument numbering and identification system and the flow plan symbols used on drawings, tabulations, and specifications generated by the Instrumentation and Controls Division for the Molten-Salt Reactor Experiment are in most respects in accordance with the ORNL standard system presented in CF-57-2-1.[1]

The general identification of instruments and controls consists of two or three upper-case letters as listed in Table 7.1.1. The list in Table 7.1.1 shows the letters that were employed, the definition or significance of each, and the position in which they were used. Table 7.1.2 shows the possible and acceptable combinations of the identification letters and the meaning of each letter group. It should be noted that in column 5 of Table 7.1.1 some specific identification letters in lower case are listed. These lower-case specific identification letters were in some cases used as subscripts to the first identification letter in order to more clearly define an instrument's specific use.

A numbering system of identification to supplement the letter identification was used in order to establish specific identity.

The numbering and specific identity system used for the MSRE was not the system recommended in Appendix A of CF-57-2-1.[1] In the MSRE numbering and specific identity system, blocks of numbers were assigned to various systems in the reactor for use as line or piping identification. An attempt was then made to make instrument numbers coincide with the line numbers wherever possible; that is, where an instrument is associated with a line, it carries the same number as the line. Table 7.1.3 is a list of the various reactor systems and the blocks of numbers assigned to the system. In the case where an instrument loop is sensing a variable in one line to control a variable in another line, the instruments in such a loop are numbered with the line number of the line in which the final control element is located.

In many cases, instrument systems were associated with vessels, pumps, and other equipment, instead of lines. In these cases, virtually every piece of equipment in the reactor system was assigned an abbreviated identification symbol, consisting in most cases of two or three upper-case letters. A list of these is given in Part I of this report.[2] In cases where an instrument is attached to specific pieces of equipment, the identification symbol was made a part of the instrument number in the same manner as line numbers were included in instrument numbers of an instrument attached or associated with a line.

In situations where more than one instrument loop was associated with a line, vessel, or piece of equipment, an additional upper-case letter was added, with a hyphen between the instrument identification number and the letter. These letters are used in alphabetical order.

The occasion arose in several instances where two instruments in the same instrument loop would require the same number. In this situation, an additional arabic numeral was added to the instrument identification number in order to give the device a specific identity.

The instrument application symbols and line identifications used in MSRE drawings are in accordance with the ORNL standard CF-57-2-1. The application symbols are presented in Fig. 7.1.1 and the line identifications in Fig. 7.1.2 for the convenience of those who may wish to interpret drawings included in this report but do not have immediate access to a copy of CF-57-2-1.

Figure 7.1.3 demonstrates the principles of the instrument numbering and identification system. Note that, although the level transmitter (LT-315-A) is sensing the level in the waste tank (WT), the instrument loop is identified by the line number 315, because the final control element (LCV-315-A) is located in line 315. The next loop on line 315 is composed of a temperature element (TE), a temperature switch (TS), and a temperature alarm (TA), which are numbered 315-B as the second loop on line 315. The radiation sensor and alarm system affiliated with the waste tank

**Table 7.1.1. Letters of identification**

The definitions and permissible positions in any combination are given

| Upper-case letter | First letter (process variable or actuation) | Second letter (instrument function) | Third letter (instrument function) | Specific identification letter(s) (lower case) |
|---|---|---|---|---|
| A | Analysis | Alarm | Alarm | Average (av) |
| C | Conductivity | Control | Control | |
| D | Density | | | Difference (d) |
| E | Electric | Element | | |
| F | Flow | | | Frequency (f) |
| G | | Glass (noncalibrated devices, bull's eye, gage glass) | | |
| H | Manual (hand actuated) | | | |
| I | Interval (time) | Indicator | | Current (i)<br>Interface (if) |
| L | Level | | | |
| M | | Modifier | Modifier | Moisture (m) |
| O | | | Operator | |
| P | Pressure | | | Power factor (pf)<br>Concentration (pH) |
| Q | | Quantity (totalizer) | Quantity (totalizer) | |
| R | Radiation | Recorder | | Ratio (r) |
| S | Speed | Switch<br>Safety (when used with third letter only) | Switch | |
| T | Temperature | Transmitter | Transmitter | |
| V | Viscosity | Valve | Valve | Volts (v) |
| W | Weight | Well | | Power (w) (watts) |
| X | Special | Special | Special | |
| Z | Position (zone) | | | |

is identified by the symbol WT, because the loop is connected and concerned only with the waste tank. It will be noted that on the level control loop there are two LS and two LA components to which an additional arabic number has been added for means of establishing a specific identity for these components.

The notation XA-4029-4 near TA-315-B designates the annunciator operated by the alarm channel and serves as a cross reference between annunciator and instrument coding systems. The "Hi" notation indicates the direction in which the alarm occurs. In the case of TA-315-B, an alarm will occur when the temperature exceeds a point corresponding to the setting of switch TS-315-B.

All instruments shown on the MSRE instrument applications diagrams are listed in the instrument application tabulation, which identifies the instrument type, the service in which it is used, the physical location in the MSRE complex, and the specification sheet for the instrument. References to these documents are given in Chap. 5.

## References

1. R. K. Adams et al., *Symbols for Instrument Flowsheets and Drawings, a Recommended System for Application to ORNL Instrument Work*, ORNL-CF-57-2, Rev. 1.

2. R. C. Robertson, *MSRE Design and Operations Report, Part I, Description of Reactor Design*, ORNL-TM-728, pp. 529–31.

**Table 7.1.2. Instrument identification**

Second and third letters

The symbol (–) indicates improbable or impossible combinations

| Process variable or actuation | | Alarm A | Control C | Element E | Glass G | Indicator I | Modifier M | Quantity (totalizer) Q | Recorder R | Switch S | Transmitter T | Self or manually operated valve V | Well W | Control operator CO | Remote control valve CV | Indicator controller IC | Indicator modifier IM | Indicator transmitter IT | Recorder controller RC | Safety switch SS | Safety valve SV |
|---|---|---|---|---|---|---|---|---|---|---|---|---|---|---|---|---|---|---|---|---|---|
| Analysis | A | AA | AC | AE | – | AI | AM | – | AR | AS | AT | – | – | ACO | ACV | AIC | AIM | AIT | ARC | ASS | ASV |
| Conductivity | C | CA | CC | CE | – | CI | CM | – | CR | CS | CT | – | – | CCO | CCV | CIC | CIM | CIT | CRC | CSS | CSV |
| Density | D | DA | DC | DE | – | DI | DM | – | DR | DS | DT | – | – | DCO | DCV | DIC | DIM | DIT | DRC | DSS | DSV |
| Electric | E | EA | EC | EE | – | EI | EM | EQ | ER | ES | ET | – | – | ECO | ECV | EIC | EIM | EIT | ERC | ESS | ESV |
| Flow | F | FA | FC | FE | FG | FI | FM | FQ | FR | FS | FT | FV | – | FCO | FCV | FIC | FIM | FIT | FRC | FSS | FSV |
| Hand (manual) | H | HA | HC | – | – | – | – | – | – | HS | – | HV | – | HCO | HCV | HIC | HIM | HIT | – | HSS | HSV |
| Interval (time) | I | IA | IC | – | – | II | – | IQ | IR | IS | – | – | – | – | – | – | – | – | – | ISS | – |
| Level | L | LA | LC | LE | LG | LI | LM | – | LR | LS | LT | LV | – | LCO | LCV | LIC | LIM | LIT | LRC | LSS | LSV |
| Pressure | P | PA | PC | PE | – | PC | PM | – | PR | PS | PT | PV | – | PCO | PCV | PIC | PIM | PIT | PRC | PSS | PSV |
| Radiation | R | RA | RC | RE | – | RI | RM | RQ | RR | RS | RT | – | – | RCO | RCV | RIC | RIM | RIT | RRC | RSS | RSV |
| Speed | S | SA | SC | SE | – | SI | SM | – | SR | SS | ST | SV | – | SCO | SCV | SIC | SIM | SIT | SRC | SSS | SSV |
| Temperature | T | TA | TC | TE | – | TI | TM | – | TR | TS | TT | TV | TW | TCO | TCV | TIC | TIM | TIT | TRC | TSS | TSV |
| Viscosity | V | VA | VC | VE | – | VI | VM | – | VR | VS | VT | – | – | VCO | VCV | VIC | VIM | VIT | VRC | VSS | VSV |
| Weight | W | WA | WC | WE | – | WI | WM | WQ | WR | WS | WT | – | – | WCO | WCV | WIC | WIM | WIT | WRC | WSS | WSV |
| Special[a] | X | XA | XC | XE | – | XI | XM | XQ | XR | XS | XT | XV | XW | XCO | XCV | XIC | XIM | XIT | XRC | XSS | XSV |
| Position | Z | ZA | ZC | ZE | – | ZI | – | – | ZR | ZS | ZT | – | – | ZCO | ZCV | ZIC | ZIM | ZIT | ZRC | ZSS | ZSV |

[a]The letter "X" (special) may also be used as a second or third letter identificatioon.

Table 7.1.3. Line numbering system

| Number | System |
|---|---|
| 100–199 | Fuel salt system |
| 200–299 | Coolant salt system |
| 300–399 | Waste system |
| 400–499 | Leak detection |
| 500–699 | Gas system |
| 700–799 | Lube oil system |
| 800–899 | Cooling water system |
| 900–000 | Miscellaneous |
| 1,000–1,999 | Miscellaneous |
| 2,000–2,999 | Unassigned |
| 3,000–3,999 | Miscellaneous temperatures |
| 4,000–4,999 | Annunciators |
| 5,000–5,999 | Thermocouple scanners |
| 6,000–6,999 | Miscellaneous radiation instruments |
| 7,000–7,999 | Health physics |
| 8,000–8,999 | Nuclear |
| 9,000–9,999 | Instrument air systems |
| 10,000–10,999 | Unassigned |

## 7.2 WIRING PRACTICES AND CODING

### 7.2.1 Introduction

The MSRE electrical control circuits are described by three types of wiring drawings. These are: (1) elementary (or schematic) diagrams, (2) panelboard and terminal box diagrams, and (3) interconnection diagrams. All circuits are documented on the elementary diagrams, which show, by means of graphic symbols and identification codes, the electrical connections and functions of the different circuit arrangements. They facilitate the tracing of circuits and their functions without regard to the actual physical size, shape, or location of the various elements and conductors. The panelboard and interconnection wiring diagrams show only the physical layout of circuit elements and conductors in particular parts of the complete system shown in the elementary diagrams. Figures 7.2.1, 7.2.2, 7.2.3, and 7.2.4 are typical examples taken from drawings of the MSRE system. These examples were revised and simplified for the purpose of this illustration, and the actual MSRE drawings should be used to obtain accurate information. Other information that complements and is correlated with that on the above diagrams includes the conduit and wireway layout drawings, the process instrument switch tabulation,[1] and the manual switch tabulation.[2]

### 7.2.2 Diagrams and Tabulations

There are two types of elementary diagrams: the engineering elementary, shown in Fig. 7.2.1, and the maintenance elementary, shown in Fig. 7.2.2. The two are similar in appearance, because the same circuits appear in a functional arrangement on both types, but a close look will reveal many differences, and the information conveyed by each is distinctly different. The engineering elementary is a functional diagram, which describes how the circuit elements operate to initiate or inhibit control actions in the reactor system. Means for quickly locating relay coils and contacts, operating set points for process-actuated switches, switch developments for manually operated selector switches, and notes describing the operational modes of various elements such as solenoid valves, motors, clutches, and brakes are all a part of the engineering elementary diagram. It is devoid of such information as detailed conductor coding, terminal and separable connector tie points, and some circuit elements, such as arc suppression diodes and jumper board lamps, that do not contribute to an understanding of a circuit function. All of this latter information is found on the maintenance elementary type of diagram, which is useful for design and check-out purposes and for locating faults or making revisions to the system after it is installed.

Both types of elementary drawings were made for all circuits in the MSRE except the following, which are shown on maintenance elementary diagrams only: (1) indicator lamps, (2) electronic Consotrol instruments (ECI), (3) instrument and control circuit power distribution, and (4) nuclear instruments. The indicator lamp circuits are simple, and the maintenance elementary serves the purpose of both types of diagrams. There are no engineering elementary diagrams for the ECI and nuclear instrument modules because they function independently as complete units and only their inputs and/or outputs have functional significance in the electrical control circuits. These inputs and outputs are identified in the control circuits by a relay or process instrument switch contact designation. The modules, however, are located in several areas and must be interconnected, and the maintenance elementary diagram provides a schematic record of the interconnecting wiring, wire tie points, and separable connectors. Engineering elementary diagrams of the circuits in the nuclear instrument modules are discussed in Part IIA of this report,[6] and those for the ECI modules are discussed in Sect. 5.2. The instrument and control circuit power maintenance elementary diagrams (Fig.

7.2.3) are necessary to show the order in which individual control circuits are connected to the various ring-type power buses and the distribution panels feeding the buses. The bus from which each circuit receives power is identified by number (Fig. 7.2.5) on the control elementary diagrams (Fig. 7.2.1 and 7.2.2), but the sequence of connections is not. The instrument power distribution single-line diagram (see Fig. 4.13.3) should be consulted for functional information about the instrument and control circuit power system.

Examples of instrument panelboard and field-mounted terminal box wiring diagrams are shown in Fig. 7.2.4. They show the physical layout of wiring between components and terminals mounted in the same panel or between field-mounted components and terminals in a box nearby. Signal cables interconnecting measuring instrument components in a particular panel with those located elsewhere are also shown on the panelboard wiring diagrams.

Figure 7.2.4 is also typical of the interconnection wiring diagrams that describe the physical layout and routing of wires in interconnecting the panelboards, terminal boxes, and other field-mounted equipment. Individual wires having the same origin and destination are bundled together after leaving the terminal strips. These bundles and the wireways through which they are routed are identified by a cable and wireway coding system discussed in paragraph 7.2.3.3 (Fig. 7.2.6). Interconnection diagrams are useful primarily for construction purposes, and there is a separate set of diagrams for each functional group of circuits as follows: (1) safety, (2) control, (3) annunciator, (4) indicator lamps, (5) ECI signals, (6) instrument and control power, and (7) nuclear instruments. This arrangement expedited the design and construction schedules by permitting the design of control circuits, the shop fabrication of instrument panels, the installation of wiring for field-mounted components, and the installation of interconnecting wiring to proceed independently and simultaneously.

Additional information about the operating characteristics of many devices shown on the above diagrams can be found on the instrument application tabulation,[3] manual switch tabulation,[2] and process instrument switch tabulation.[1] The instrument application tabulation[3] is discussed in Sect. 7.1. The manual switch tabulation[2] is a complete list of manual switches providing information about switch type, function, and location. The process instrument switch tabulation[1] lists all process-actuated switches and contains pertinent information on operational characteristics, switch descriptions, actuation set points, and references.

### 7.2.3 Coding

While a brief description of major features is presented here, the electrical control circuit numbering and device identification scheme is in accord with ORNL electrical design standards,[4] which should be consulted for a complete explanation of the coding system.

**7.2.3.1 Circuit identification.** A circuit is defined as a network providing one or more closed paths through which current flows between bus bars to actuate some device or group of devices such as relay coils, indicator lamps, or solenoid valves. Circuits are coded numerically starting with the number 1 and proceeding in order from left to right as shown on the elementary diagrams in Figs. 7.2.1 and 7.2.2. The numbers are placed above the circuit in question. In general, each circuit is involved with some specific operation which results from the energizing of the devices in the circuit. Circuits that are common to a functional system are assigned consecutive numbers where possible. Table 7.2.1 is a list of the functional groups and circuit number assignments in the MSRE.

**Table 7.2.1. MSRE safety and control circuit number assignments**

| Function | Circuit numbers |
|---|---|
| 1. Safety system | 1–85 |
| 2. Control interlocks | 86–114 |
| 3. Master control | 115–150 |
| 4. Radiator load control | 150–169 |
| 5. Nuclear rod control | 170–188 |
| 6. Fission chamber drives | 189–199 |
| 7. Control interlocks | 200–274 |
| 8. Nuclear instruments | 275–291 |
| 9. Safety system | 292–299 |
| 10. Auxiliary equipment | 300–317 |
| 11. Safety system | 318–320 |
| 12. Spare numbers | 321–334 |
| 13. Fuel processing facility | 335–349 |
| 14. Fuel sampler-enricher | 350–399 |
| 15. Helium dryer and preheater | 400–423 |
| 16. Spare numbers | 424–425 |
| 17. Indicator lamps | 426–429 |
| 18. Electronic Consotrol instruments (ECI) | 430–440 |
| 19. Indicator lamps | 441–449 |
| 20. Motor control centers | 500–570 |
| 21. Spare numbers | 571–574 |
| 22. Fuel processing sampler | 575–599 |
| 23. Electronic Consotrol instruments (ECI) | 600–649 |
| 24. Freeze valves | 650–781 |
| 25. Spare numbers | 782–799 |
| 26. Annunciators | 800–1120 |
| 27. Spare numbers | 1121–1199 |
| 28. Off-gas sampler | 1200–1224 |

**7.2.3.2 Circuit element identification.** Circuit elements are devices such as relay and solenoid valve coils, lamps, and motors which are operated by the flow of electrical current and contacts which complete or interrupt the current flow in control circuits, all for the purpose of executing control functions. These elements are distinguished from terminal blocks and separable connectors, which are classified as conductors.

In general, individual devices such as relays, manual switches, and indicator lamps are identified by a coding system consisting of a letter followed by a number. The letters K, S, and I are used to identify the above devices. The number associated with a relay or an indicator lamp is the same as the number of the circuit in which the relay is connected. For example, referring to Figs. 7.2.1 and 7.2.2, the complete designation is K70, K71, I70, and I71. If two or more relays are connected in parallel in the same circuit, a second letter is added following the letter K. For example, in circuit 70, the relay numbers would be KA70 and KB70 for two relays connected in parallel, and IA70, IB70, and so on for more than one indicator lamp. Contactor coils are represented by the same symbol as relays but are identified by the letters CC rather than the letter K. Contactors are devices for repeatedly establishing and interrupting an electric power circuit. The numbers associated with manual switches are assigned arbitrarily and in sequence beginning with the number 1. For example, the complete designation for the manual switches in circuits 70 and 71 is S103 and S104. These numbers are in no way related to the circuit numbers 70 and 71. Some manual switches, such as HS557C in circuit 72, and some indicator lamps are identified by a different numbering system. These elements are closely associated with the instrument control loops shown on the instrument application diagrams and are identified according to ORNL standard CF-57-2-1, a coding system described in Sect. 7.1. Reactor process instrument switches, such as RSS-557 shown in circuit 70, are also identified according to ORNL standard CF-57-2-1. Examples of symbols commonly used to represent circuit devices are shown in Fig. 7.2.7.

Instruments and control circuits receive their electrical power supply through seven distribution panelboards. These are called instrument power panels and are identified by the following letter and number combination: IPP1, IPP2, . . . , IPP7. One of these panels is shown on the diagram in Fig. 7.2.3.

Contacts are the parts of any device which coact to complete or interrupt an electrical circuit. Individual contacts on relays, switches, and other devices, except for those numbered according to the system described in ORNL standard CF-57-2-1, are identified by the addition of a letter to the device code. For example, the relay K70 has contacts K70A, K70B, K70C, K70D, and K70E, and so on in alphabetical order if more contacts are added. The numbers below the relay coil symbol on the engineering elementary diagram of Fig. 7.2.1 are the numbers of the circuits in which the contacts are connected. Underlined numbers represent normally closed contacts. All relay contacts are shown in the aspect assumed when the operating coil is deenergized. Contacts open under this condition are defined as normally open, while those which are closed are defined as normally closed. Note also that switches S103 and S104 in circuits 70 and 71 have contacts S103A and S103B. Except for push-button-type switches, all switch contacts are shown open, and their operating sequence is described by switch development details on the engineering elementary diagram for each switch. The development shown in Fig. 7.2.1 indicates that switch S2 has four contacts, S2A, S2B, S2C, and S2D, two of which are spares. Push-button switch contacts are shown in the aspect assumed when no force is applied.

Contacts on process instrument switches designated according to ORNL standard CF-57-2-1 are identified by the addition of a numeral after the last letter in the device number. For example, radiation safety switch RSS-557A has contact RSS-557A1 located in circuit 72. Additional contacts, if used, would bear the numbers RSS-557A2, RSS-557A3, and so on in numerical order. The double -S in the code number indicates that the switch is a safety-grade device. A single -S in the code number indicates that it is only a control-grade device. A short note adjacent to switch contacts operated by process variables such as flow, level, pressure, and radiation explains the relation between the variables and the contact positions.

**7.2.3.3 Conductor identification.** A conducting path is the wiring which ties two or more circuit elements together for the purpose of passing an electric current between them or for maintaining one side of these elements at a common potential with respect to some other point in the circuit. A path may have several parts or branches, but they always form a continuous metallic conductor between elements. Each path is a part of some circuit and is identified by a number followed by an upper-case letter. The number is the same as the number identifying the circuit of which the conducting path is a part, and the letters are assigned in alphabetical order to distinguish individual conducting paths in the circuit. If necessary, each branch of a conducting path – that is, individual wires connected

between terminal points – is identified by another number following the upper-case letter. For example, in Fig. 7.2.2, the conducting paths in circuit 70 are designated 70A and 70B. If individual wires connected between terminals (X's) in conducting path 70A are identified, they would be designated 70A1, 70A2, 70A3, and so on in numerical order. In the MSRE, individual branches are identified only in those cases where confusion exists because several conductors having identical wire numbers and the same area origin and destination are routed through the same bundle.

Another coding system is used to identify the conducting paths of power supply buses. Every branch of the conducting path is identified by a code derived from the instrument power distribution panel number, the circuit breaker number, and the polarity of the particular bus, plus a numeral. The coding system is described by the typical example shown in Fig. 7.2.5. The first four characters are common to all branches of any one conducting path or ring bus (see Fig. 7.2.3), and only the final character is changed to identify individual branches. Since conductor coding is not essential to understand a circuit's functional purpose, it is not shown on engineering elementary diagrams.

To simplify the design and construction of panelboard wiring and the tracing of conductors for maintenance purposes, additional coding information is provided on the instrument panelboards and terminal box wiring diagrams. The conductors between panel- and field-mounted components and the terminal strips are identified by a letter-number combination at the component end of each conductor. This is illustrated on the wiring diagram in Fig. 7.2.4. The letter-number combination identifies the terminal point to which the opposite end of the wire is connected.

Wire markers with conductor identification numbers are attached to each of the interconnection wires where they connect to terminal points. The proper identification number for each conductor is shown on the interconnection wiring diagram, which is also illustrated in Fig. 7.2.4. Wire bundles or cables are identified by a number-letter combination based on their origins and destinations. A typical example of this is explained in Fig. 7.2.6. Conductors are color coded as shown in Table 7.2.2.

**Table 7.2.2. Color codes**

Control circuit conductors

| Type | Color |
|---|---|
| Safety grade | Red |
| Annunciator | Yellow |
| Electronic Consotrol instruments | Blue or violet |
| Neutral | White |
| Equipment ground | Green |
| All others | Black |

### 7.2.4 Wiring Practices

Where applicable to the MSRE electrical control system, the wiring methods, the fabrication and installation of conduits, wireways, and other enclosures, and the applications of commercially available wiring devices comply with the provisions of the National Electric Code.[5]

As a rule, control circuit elements mounted in panelboards, such as relays, instrument contacts, push buttons, and annunciators, are wired to terminal strips located on the interior sides of the panels. Field-mounted circuit elements, such as valve position switches, solenoid valves, and process-actuated switches, are wired to terminal strips in conveniently located terminal boxes. The terminal strips are connected together as required by interconnecting wires running through wireways which extend from points underneath the main and auxiliary control areas to remote panels and field-mounted terminal boxes. Except for the nuclear instrument panels, all wires leave the panels at the bottom through holes in the floor. Conduits extend southward from the top of the nuclear instrument panels to the nuclear instrument penetration just outside the auxiliary control room.

There are two wireway systems. One contains safety-grade wires and instrument signal cables, and the other contains control-grade wires. The safety-grade system consists of three separate sets of rigid conduits. Although the three sets run parallel to one another, they are separated physically, and conductors in one set never come into contact with those of any other set, safety or control grade. Field-mounted components in different safety channels are connected to separate terminal boxes. A similar conduit system encloses signal cables connecting safety-grade instrument components. The control-grade wireways consist of three separate sets of 3-in. by 24-in. open trays. Thermocouples, signal cables, and control circuit wiring are run in separate trays. Conductors from isolated equipment are run in conduit to the nearest tray.

All electrical conductors originating within the contained areas are brought out through specially designed leak-tight penetrations in the wall of the containment vessel. The conductors are then terminated in junction boxes located in a tunnel adjacent to the reactor.

Standard control cable and thermocouple lead wire is run in open trays from the tunnel to the main and auxiliary control areas. All thermocouple extension wires, from both thermocouples and readout instruments, are brought to a patch panel in the auxiliary control room.

In the instrument panelboards, safety- and control-grade wires are run in separate bundles. Safety-grade wire bundles are separated physically from each other and from control-grade wire bundles. These are identified on the panelboard wiring diagrams by the letter S for safety grade and the letter C for control grade. This separation of conductors is also maintained as far as possible in the safety and control relay cabinets, but some mixing is unavoidable where contact matrices are interconnected. The construction and wiring of the relay cabinets are described in Sect. 4.11.

In general, all wires from field- and panel-mounted interlock switches are brought to terminals in the relay cabinets instead of being connected point to point, and most of the interconnection wiring is done between terminals in the relay cabinets. However, a few interlocks of lesser importance were connected point to point in the field. Also, the circuits associated with subsystems such as the samplers, fuel processing system, and cover gas system are separately interconnected in field panels and junction boxes, and only those wires required for interconnection with the main reactor are brought back to points in the main and auxiliary control areas.

Although the use of the central interconnection method results in a higher apparent installation cost, the resultant reduction in design effort and installation supervision, together with the simplification of system checkout and operational trouble-shooting and the flexibility for future revisions, justifies the use of this method and probably results in lower overall costs.

### References

1. R. L. Moore, *MSRE Process Instrument Switch Tabulation,* ORNL-CF-65-6-5;* P. G. Herndon, *MSRE Fuel Processing Facility Instrument Switch Tabulation,* ORNL-CF-65-9-50;* R. L. Moore, *MSRE Sampler-Enricher System Instrument Switch Tabulation,* ORNL-CF-65-8-66.*

2. P. G. Herndon, *Manual Switch Tabulation for MSRE Control Circuits,* ORNL-CF-65-3-35.*

3. R. L. Moore, *MSRE Instrument Application Tabulation,* ORNL-CF-65-12-49;* A. H. Anderson, *MSRE Sampler-Enricher System Instrument Application Tabulation,* CF-65-10-53;* P. G. Herndon, *MSRE Fuel Processing System Instrument Application Tabulation,* CF-65-9-69.*

4. A. E. G. Bates et al., *Instrumentation and Controls Division Electrical Design Standards and Graphical Symbols,* ORNL-CF-60-10-62.*

5. *National Electric Code (NEC),* 1965 edition, published by the National Fire Protection Association (NFPA), NFPA No. 70.

6. J. R. Tallackson, *MSRE Design and Operations Report, Part IIA, Nuclear and Process Instrumentation,* ORNL-TM-729, chap. 2 (February 1968).

*Not available for external distribution.

## 7.3 PNEUMATIC SYSTEMS INSTALLATION PRACTICES AND CODING

Three types of drawings were generated for use in the maintenance and construction of the MSRE pneumatic instrument systems. These are (1) pneumatic schematic diagrams, (2) panelboard piping diagrams, and (3) interconnection piping diagrams. Typical examples of these diagrams are shown in Figs. 7.3.1, 7.3.2, and 7.3.3. These examples are simplified for purpose of illustration, and individual drawings will contain much more information than is depicted by the examples.

The pneumatic schematic diagram (Fig. 7.3.1) duplicates, in some respects, information found on the instrument applications diagrams but includes additional details such as air header connections, line number identification, bulkhead union locations, and miscellaneous valving. These diagrams served as a guide and check sheet during system design and were subsequently issued for use in system maintenance during operation. They also continue to be useful in planning and documentation of system revisions.

To facilitate the construction of major assemblies such as instrument panels, transmitter racks, solenoid racks, etc., tubing entering or leaving such assemblies is terminated at a panel bulkhead, and connection between external and internal tubing is made by means of a bulkhead-type union fitting. This system allowed the design of panel piping to proceed independently of the design of interconnection and field piping and also allowed the instrument panels and racks to be fabricated in central shops, set in place, and later interconnected. Panel piping diagrams (Fig. 7.3.2) were furnished to facilitate shop fabrication of panels and racks, and interconnection diagrams (Fig. 7.3.3) were furnished to facilitiate field installation of tubing interconnecting these assemblies with each other and

with field-mounted components. Interconnected components may or may not appear on the same drawing, as shown in Fig. 7.3.3. Where components are on separate drawings, the tubing is collected into a bundle with other tubing going to the same area, and reference is made to the drawing on which the tubing run is continued.

As shown in Fig. 7.3.1, each pneumatic line is assigned an identification number. This number consists of a primary identification number or equipment abbreviation followed by a dash and another number. The primary identification number is the line number or equipment identification abbreviation to which the final control element of the instrument loop is attached and is the same as the instrument applications number assigned to the loop (see Sect. 7.1). The dash number is a number assigned in numerical order as systems were being designed.

With the exception of the air headers and piping within the reactor and drain tank cells, ¼-in.-OD seamless soft-annealed copper tubing is used for all instrument air lines in the MSRE. Lines inside the reactor and drain cells are ¼-in. sched 40 stainless steel pipes. The construction of the air header system is discussed in Sect. 3.14.

To ensure containment, block valves are installed on all instrument air lines penetrating the reactor and drain tank cell walls except those connected to control valve vents. The vent lines are connected to a common header, and a block valve is installed in the header vent. These valves are instrumented to close in the event of unsafe conditions (see Sect. 4.8).

Metallic-ferrule compression-type fittings were used for all tubing connections in the pneumatic systems. The use of standard pipe fittings for piping connections was permitted where applicable; however, many pipe joints were welded, particularly those on instrument air headers. The use of pipe dope to eliminate leakage of these fittings was not permitted, but the use of Teflon tape for this purpose was allowed.

An effort was made to ensure cleanliness of the instrument air system during all phases of procurement, fabrication, and installation, and all lines were blown out prior to operation.

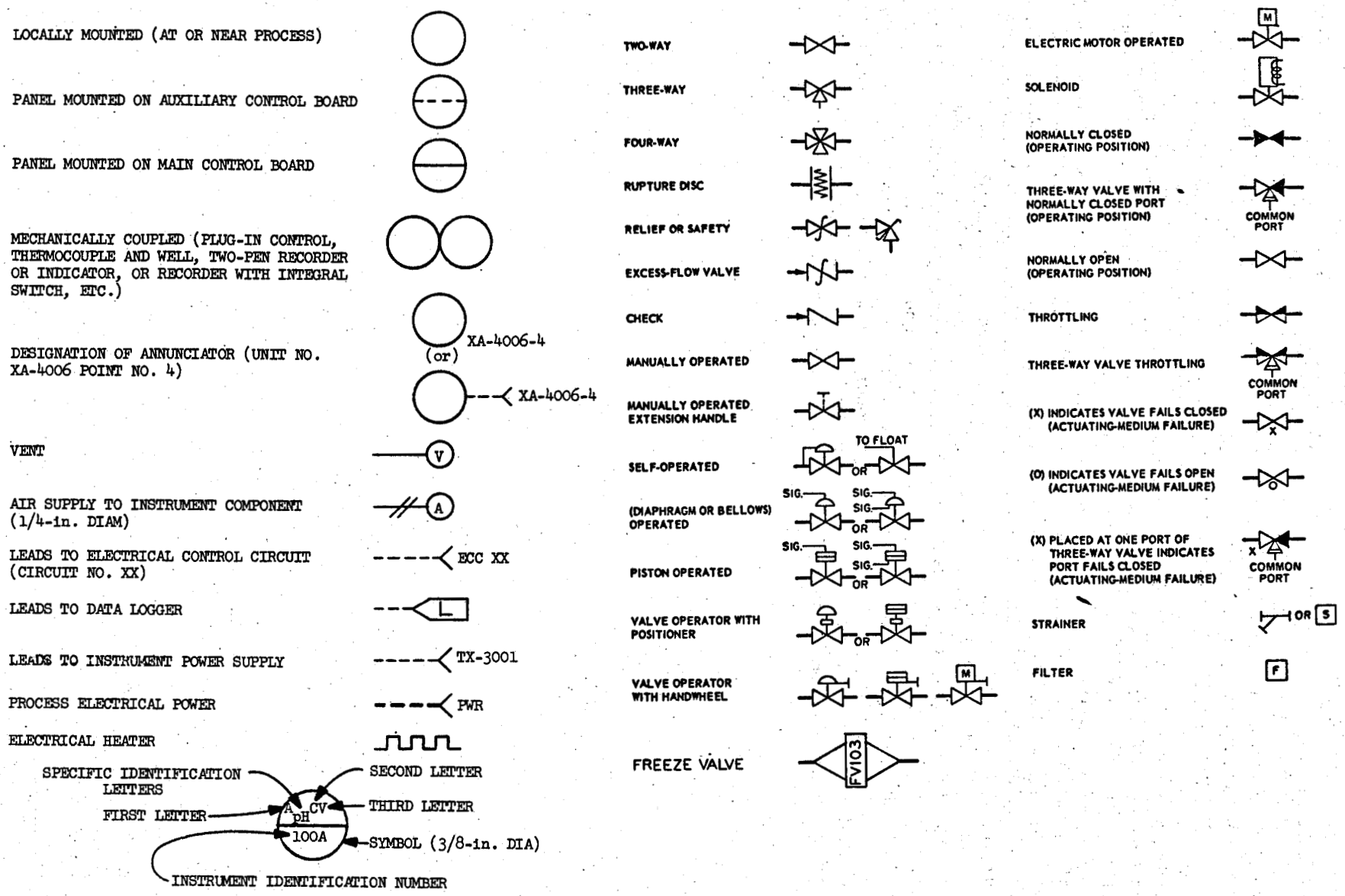


**Fig. 7.1.1. Symbols used on MSRE instrument application diagrams.**

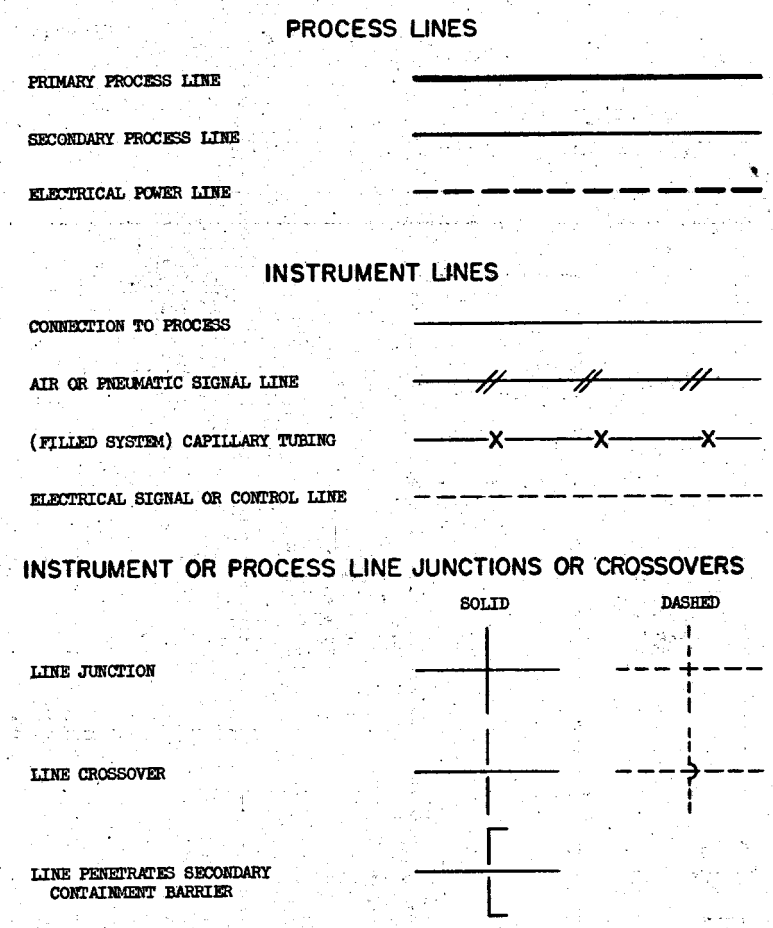


**Fig. 7.1.2. Line identification symbols used on MSRE instrument application diagrams.**

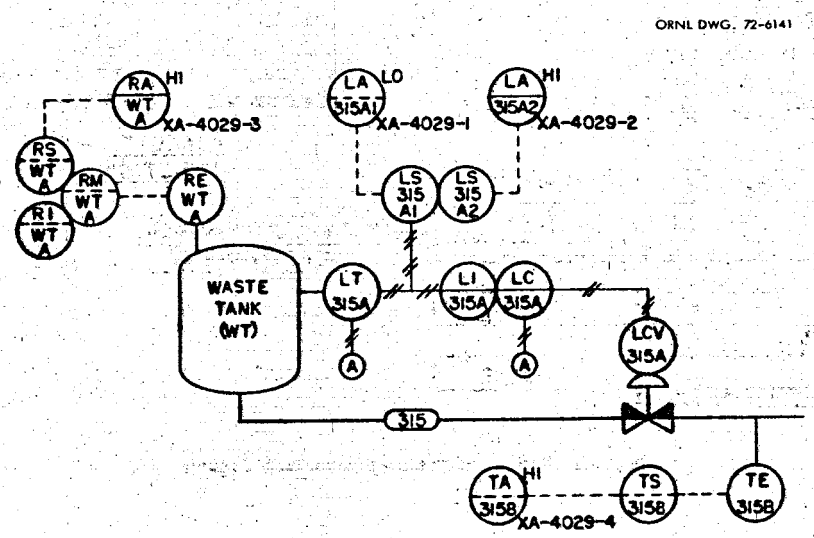


**Fig. 7.1.3. Typical application of instrument numbering and identification system.**

ORNL-DWG. 72-6142

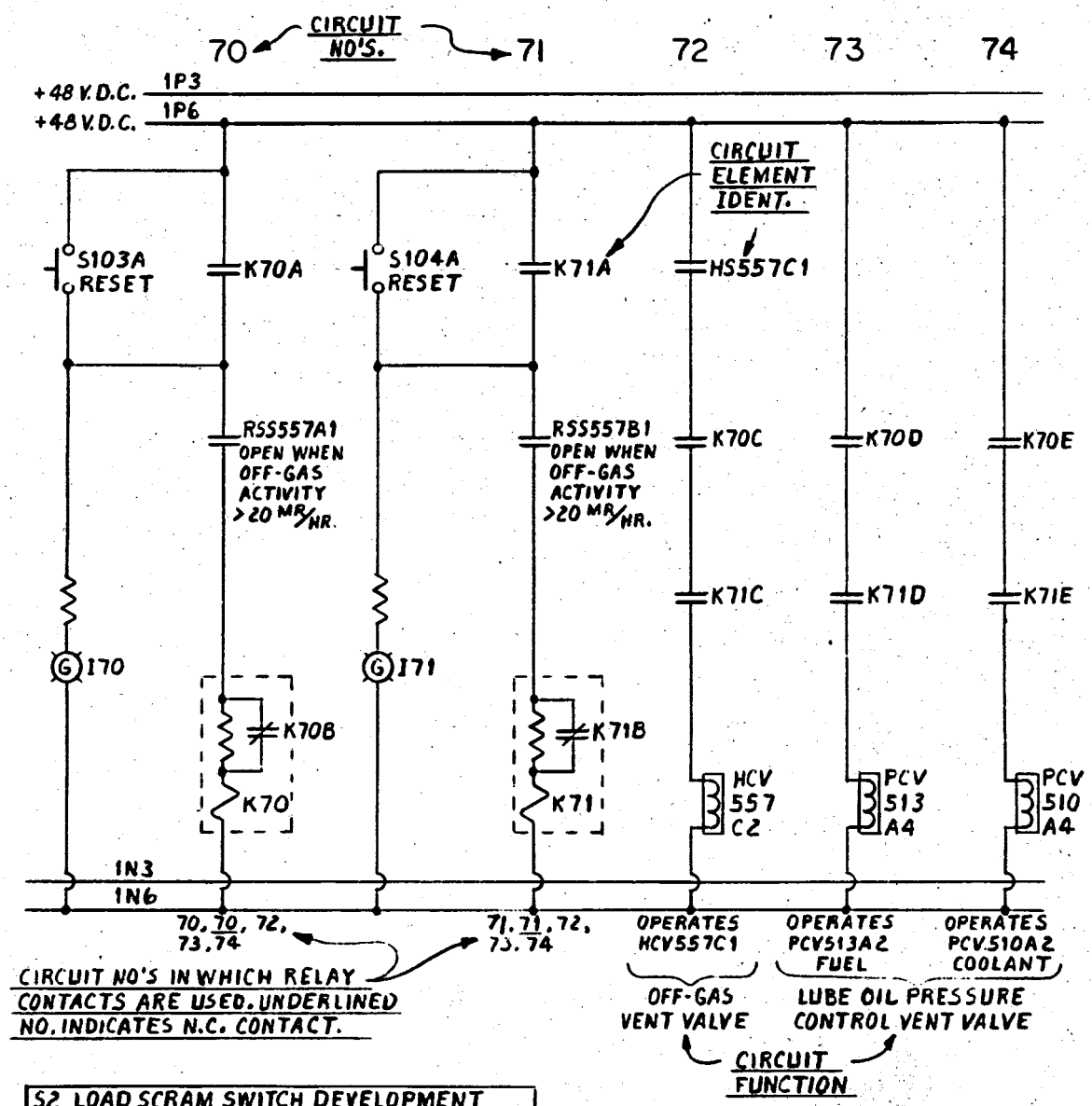


| S2 LOAD SCRAM SWITCH DEVELOPMENT | | | | | |
|---|---|---|---|---|---|
| CONTACTS | | POSITION | | | LOCATION CIRCUIT NO. |
| | | SCRAM | | SCRAM | |
| | A(1) | | X | | 11 |
| | B(2) | | X | | SPARE |
| | C(3) | | X | | 11 |
| | D(4) | | X | | SPARE |

X-DENOTES CLOSED CONTACT

TYPICAL SWITCH DEVELOPMENT.

Fig. 7.2.1. Typical engineering elementary diagram.

ORNL DWG. 72-6143

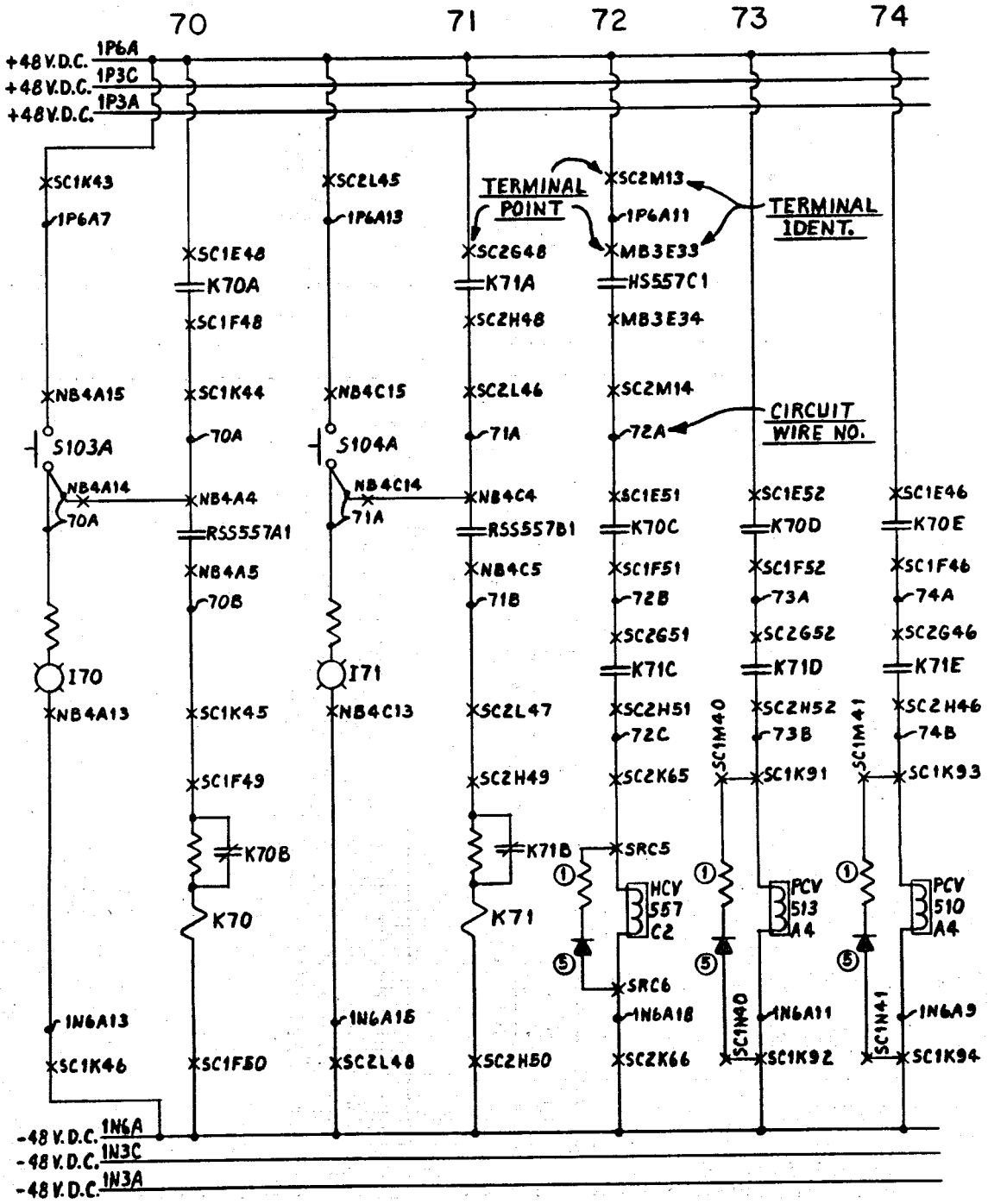


Fig. 7.2.2. Typical maintenance elementary diagram.

ORNL DWG. 72-6144

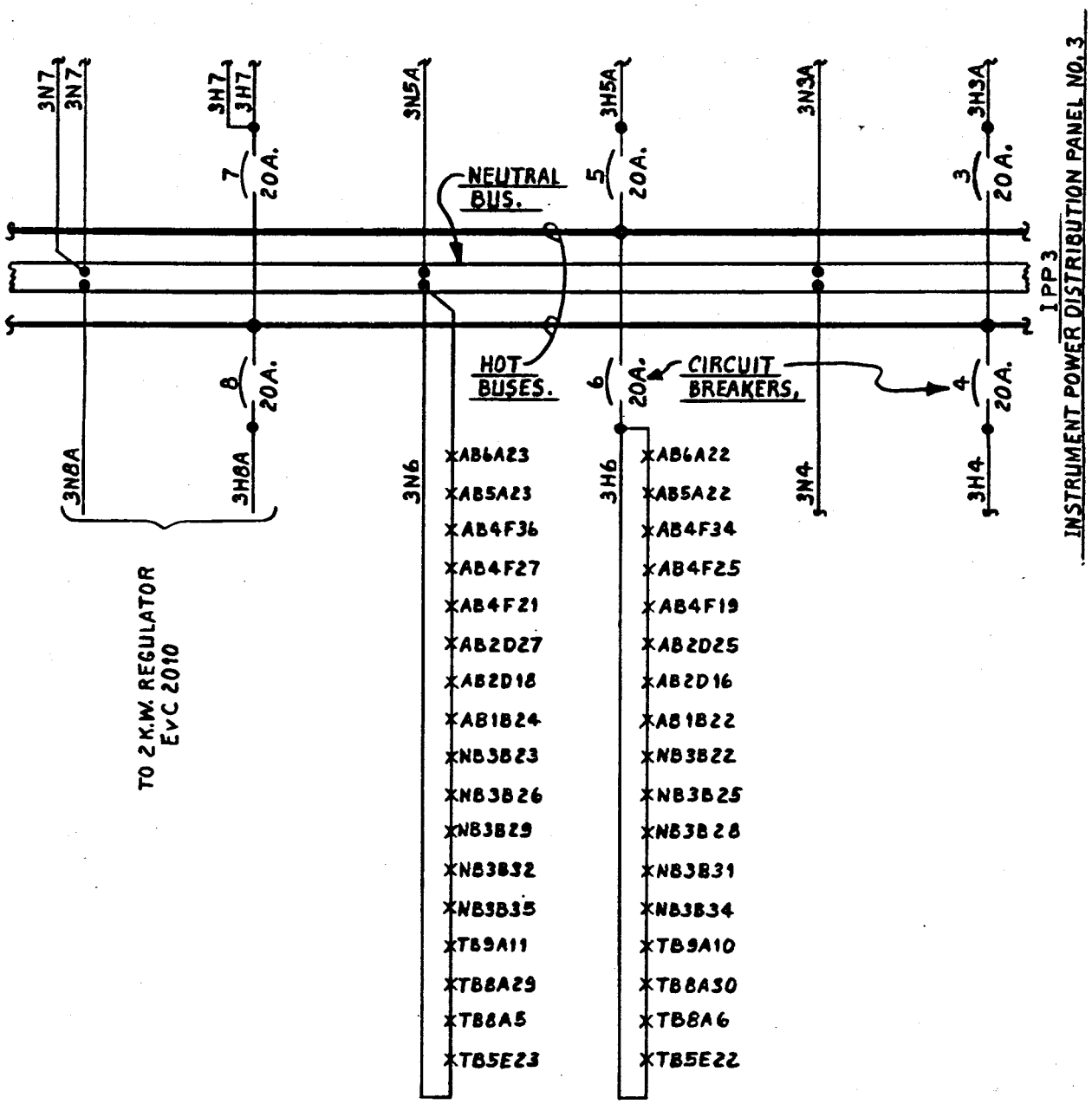


**Fig. 7.2.3. Typical maintenance elementary diagram, instrument and control circuit power distribution buses.**

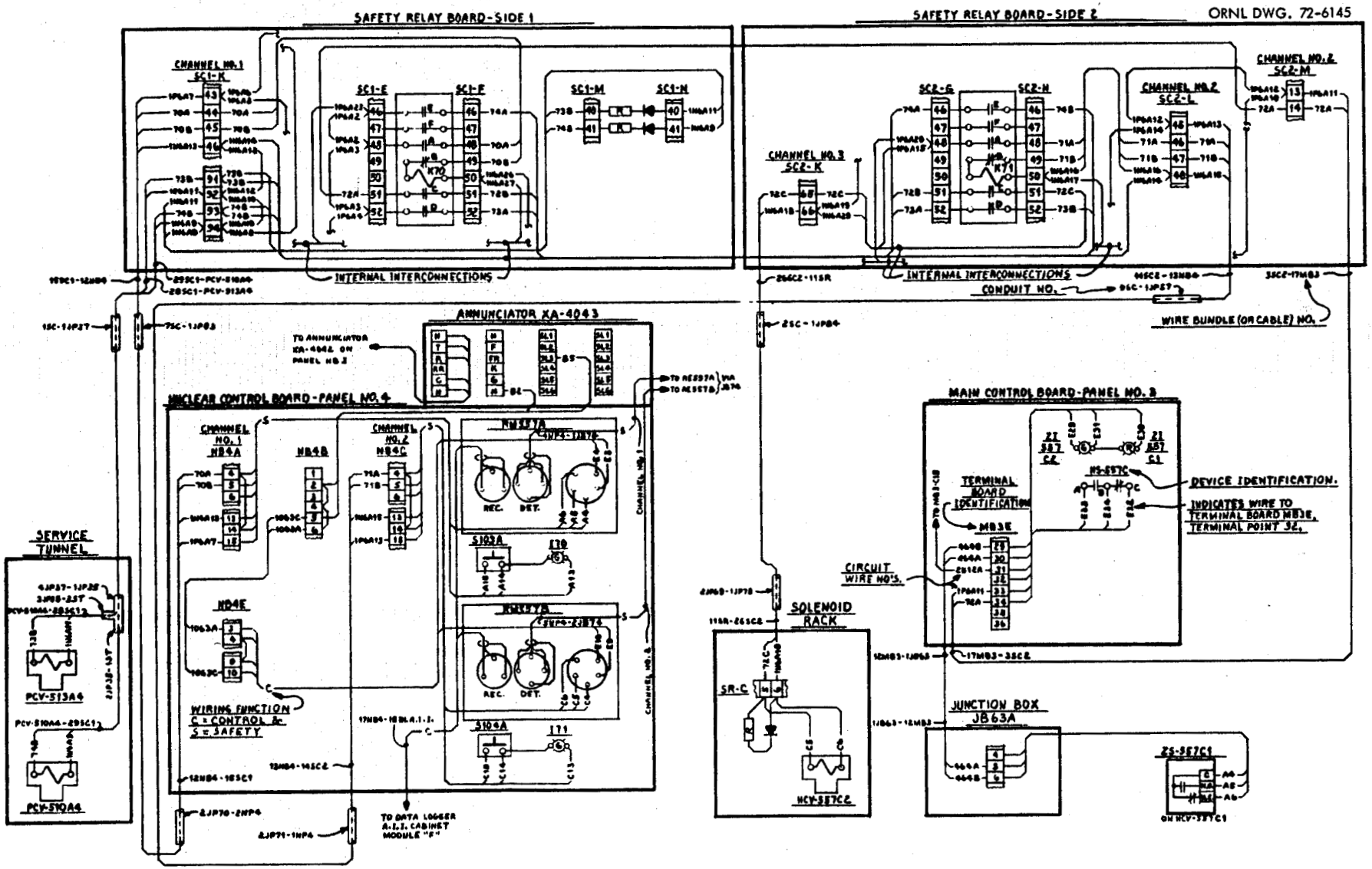


Fig. 7.2.4. Wiring composite. Shows typical wiring diagram and interconnection wiring diagram.

ORNL DWG. 72-6146

Key to meaning of characters

Ring bus or conducting path designation

Individual branch conductor designation

1 P 6 A 1
(1st) (2d) (3d) (4th) (5th)

| Character | Interpretation |
|---|---|
| 1st | Number of power distribution panel (IPP1) |
| 2d | Polarity of bus<br>P – direct current positive<br>H – ungrounded or hot conductor on 60-Hz alternating current<br>N – grounded or neutral conductor on 60-Hz alternating current or direct current negative |
| 3d | Circuit breaker number (breaker 6 in IPP1) |
| 4th | Distinguishes between conducting paths or ring buses when more than one path is connected to the same circuit breaker; start with the letter A and progress in alphabetical order |
| 5th | Individual branch (wire between two terminals) identification beginning with the number 1 and progressing in numerical order |

**Fig. 7.2.5. Typical example of conductor identification coding system for instrument and control circuit power buses.**

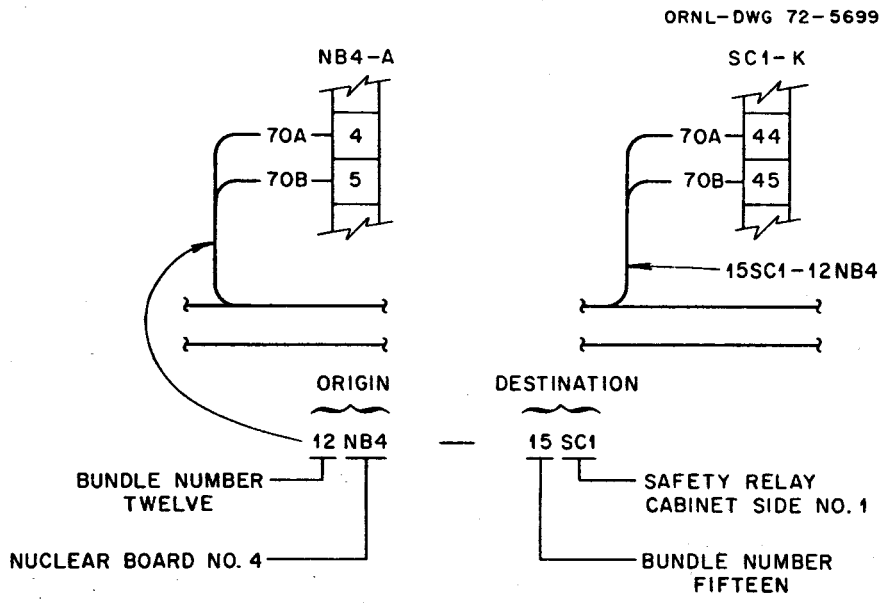


**Fig. 7.2.6. Typical example of wire bundle or cable coding system.**

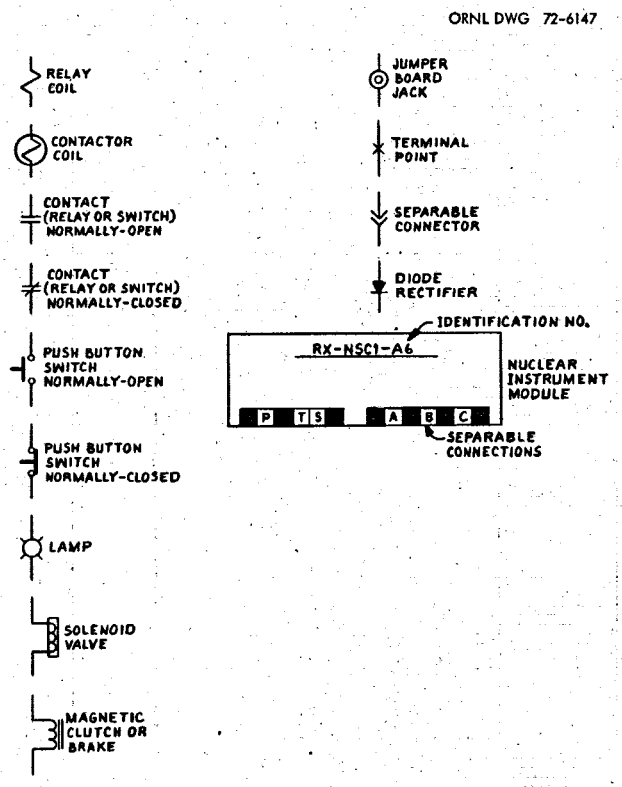


Fig. 7.2.7. Typical symbols.

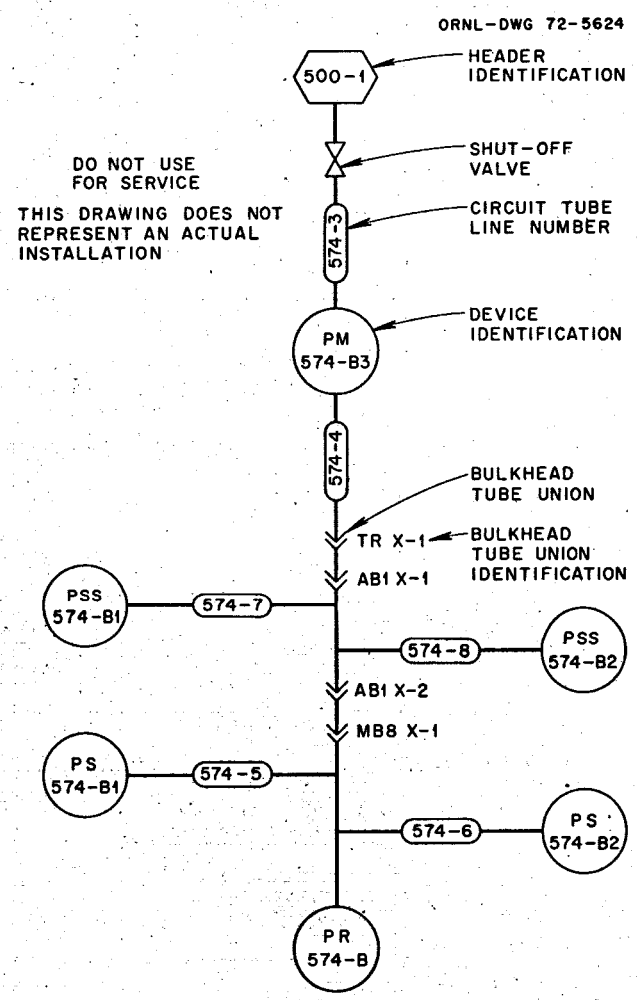


Fig. 7.3.1. Typical pneumatic schematic diagram.

ORNL-DWG 72-5625

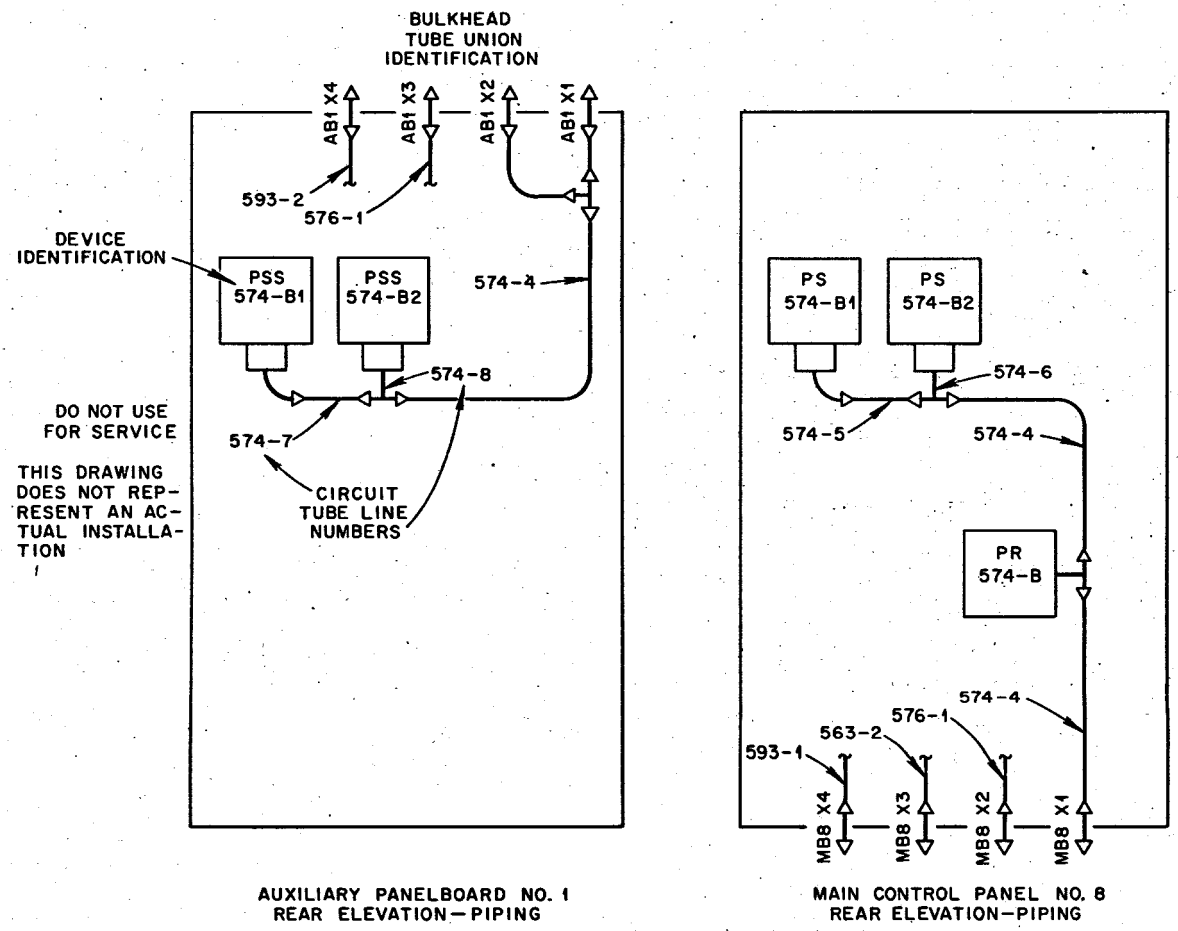


**Fig. 7.3.2. Typical control panel piping diagram.**

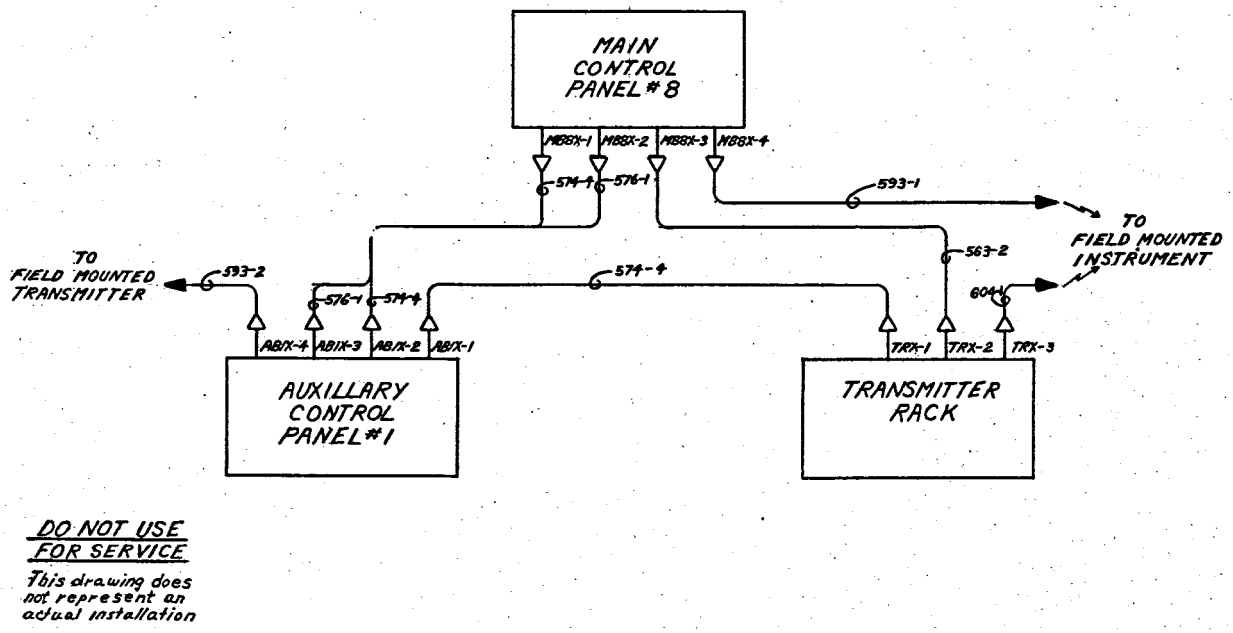


**Fig. 7.3.3. Typical piping interconnection diagram.**

## *INTERNAL DISTRIBUTION*

1. A. H. Anderson
2. J. L. Anderson
3. C. F. Baes
4. S. E. Beall
5. M. Bender
6. E. S. Bettis
7. R. Blumberg
8. E. G. Bohlman
9. C. J. Borkowski
10. R. B. Briggs
11. T. M. Cate
12. F. L. Culler
13. D. G. Davis
14. J. R. Distefano
15. S. J. Ditto
16. W. P. Eatherly
17. D. E. Ferguson
18. L. M. Ferris
19. C. H. Gabbard
20. W. R. Grimes
21. A. G. Grindell
22. R. H. Guymon
23. P. N. Haubenreich
24. P. G. Herndon
25. E. C. Hise
26. H. W. Hoffman
27. T. L. Hudson
28. J. J. Keyes
29. A. I. Krakoviak
30. J. W. Krewson
31. M. I. Lundin
32. R. N. Lyon
33. R. E. MacPherson
34. H. E. McCoy
35. L. E. McNeese
36. J. R. Tallackson
37. C. D. Martin
38. H. J. Metz
39. C. K. McGlothlan
40–69. R. L. Moore
70. C. A. Mossman
71. E. L. Nicholson
72. L. C. Oakes
73. R. B. Parker
74. A. M. Perry
75. H. L. Redford
76. R. C. Robertson
77–78. M. W. Rosenthal
79. Dunlap Scott
80. M. J. Skinner
81. I. Spiewak
82. J. R. Tallackson
83. R. E. Thoma
84. D. B. Trauger
85. R. W. Tucker
86. A. M. Weinberg
87. J. R. Weir
88. K. W. West
89. J. C. White
90. L. V. Wilson
91–92. Central Research Library
93. Document Reference Section
94–95. Laboratory Records Department
96. Laboratory Records, ORNL R.C.

## *EXTERNAL DISTRIBUTION*

97. G. H. Burger, Mining & Metals Division, Union Carbide Corporation, Niagara Falls, New York
98. D. F. Cope, AEC, OSR
99. Ronald Feit, AEC, Washington
100. Kermit Laughon, AEC, OSR
101. H. G. MacPherson, University of Tennessee, Knoxville, Tennessee
102. M. Shaw – AEC, Washington
103–104. MSBR Program Manager, AEC, Washington
105–106. Technical Information Center
107. Research and Technical Support Division, ORO